This is a reproduction of a library book that was digitized by Google as part of an ongoing effort to preserve the information in books and make it universally accessible.

Google™ books

https://books.google.com

Digitized by Google

Digitized by Google

Digitized by Google

The Library of

THE UNIVERSITY OF MINNESOTA
OMNIBUS VINCULUM COMMUNE ARTIBUS

Class Ph 522.19
Book f C17

Digitized by Google

Digitized by Google

The Library of

Class M 522.19

Book f C 17

Digitized by Google

Digitized by Google

Digitized by Google

Digitized by Google

THE CAPE OBSERVATORY STAFF IN 1879.

THE CAPE OBSERVATORY STAFF IN 1906.

Digitized by Google

A HISTORY AND DESCRIPTION

OF

THE ROYAL OBSERVATORY,

CAPE OF GOOD HOPE.

BY

SIR DAVID GILL, K.C.B.

KNIGHT OF THE PRUSSIAN ORDER *POUR LE MÉRITE*
COMMANDER OF THE LEGION OF HONOUR (FRANCE)
HON. LL.D., ABERDEEN AND EDINBURGH; HON. D.SC., OXFORD, CAMBRIDGE,
DUBLIN, AND CAPE OF GOOD HOPE
F.R.S., HON. F.R.S.E., FOREIGN SEC. R.A.S.

Correspondant de l'Institut de France (Académie des Sciences) et de Bureau des Longitudes (France); Foreign Member della Reale Accademia dei Lincei, Roma; Foreign Member of the Royal Academy of Sciences, Amsterdam; Corresponding Member of the Royal Academy of Sciences, Berlin; Corresponding Member of the Imperial Academy of Sciences, St Petersburg. FOREIGN MEMBER of The National Academy of Sciences, Washington; of the Royal Academy of Sciences of Sweden; of the Société Hollandaise Nationale des Sciences (Haarlem); of the American Academy of Arts and Sciences (Boston); of the American Philosophical Society of Philadelphia; of the Italian Spectroscopic Society (Rome). HONORARY MEMBER of the New York Academy of Sciences; of the Société des Sciences de Finlande (Helsingfors); of the Royal Society of Glasgow, of the Royal Society of South Africa; and First Honorary Member of the Astronomical and Astrophysical Society of America. CORRESPONDING MEMBER of the Société Nationale des Sciences, Cherbourg; of the Sociedade de Geographia, Lisbon, &c.
Bruce Medallist of the Astronomical Society of the Pacific (1900); *Watson Medallist of the National Academy of the United States* (1900); *Gold Medallist of the Royal Astronomical Society, London* (1882 *and* 1908); *Royal Medallist of the Royal Society of London* (1903); *Valz Medallist of the Institute of France (Acad. des Sciences)* (1882).

Published by Order of the Lords Commissioners of the Admiralty in obedience to His Majesty's Command.

UNIVERSITY OF MINNESOTA LIBRARY

LONDON:
PUBLISHED BY HIS MAJESTY'S STATIONERY OFFICE.

PRINTED BY NEILL & CO., LIMITED, BELLEVUE, EDINBURGH.

1913.

[*Crown Copyright Reserved.*]

Digitized by Google

PREFACE.

VERY early in my career as an astronomer it became my duty and privilege to be connected with the design and erection of Lord Crawford's Observatory at Dun Echt.

The book to which I turned, and found to be the most suggestive and useful in these circumstances, was F. G. W. Struve's *Description de l'Observatoire Astronomique Central de Pulkowa*; and no one, even in the present day, who may be charged with the design and erection of a great Observatory, can afford to neglect this work. There is inspiration to be found in nearly every page of it, for its author had the true genius and spirit of the practical astronomer—the love of refined and precise methods of observation and the inventive mechanical and engineering capacity—these qualities in him being stimulated to the highest degree by the unique opportunity offered by the Emperor Nicholas, viz. the command to design and erect, almost regardless of cost, the most perfect and complete Observatory that Struve could devise.

Remembering the help and pleasure which the study of Struve's work had given me, I resolved, in humble imitation, to write a description of the Cape Observatory.

Struve's classic work described a complete establishment constructed after his own ideals to fulfil the highest requirements of astronomy at the time. The present work is rather a history of the gradual development of an old institution, and a description of such additional instruments and appliances as opportunity and available means enabled the Cape Observatory to secure in its endeavour to meet the successive requirements of science.

But perhaps the difference in the basis of this work from that of Struve may not on that account rob it entirely of interest and utility, seeing that it represents conditions which more frequently arise than does the opportunity to construct an entirely new Observatory regardless of the financial limitations which so frequently hamper the projects and aspirations of the designer. Another point of interest may be that the chief development of the Cape Observatory has taken place during a period in the history of astronomy that has been remarkable for the introduction of new methods of research, due in great part to the introduction of the photographic dry-plate and the modern developments of astrophysics.

The descriptive part of the work was written before I retired from the Cape, and thus it has been ready for publication for some years. But it seemed desirable to preface the "Description" by a "History of the Cape Observatory," and this view was strongly supported by the Admiralty officials whom I consulted. Its preparation has occupied a much longer time than I had anticipated; for, although I have retired from official life, other demands on my time, in connection with scientific work of various kinds, have arisen, and these are largely responsible for the delay.

I am much indebted to Mr E. B. Knobel for his kind assistance in reading the proof sheets; to Mr John Power, of the Cape Observatory, for preparation of the Appendices I., II., and III.; and to Captain Lyons, F.R.S., for revising the translation of Dr Bahn's paper on the Geodetic Survey of South Africa which is given in Appendix IV.

DAVID GILL.

34 DE VERE GARDENS, LONDON,
1913, *April* 24.

Digitized by Google

Ph 5??.11
C 17

HISTORY OF THE CAPE OBSERVATORY.

CONTENTS.

	PAGE
Preface	ii
Contents	iii
Introduction	v
Fallows (1820–1831)	viii
Henderson (1832–1833)	xv
Maclear (1833–1870)	xix
Stone (1870–1879)	xxiv
Charles Piazzi Smyth	xxviii
William Mann	xxviii
Gill (1879–1907)	xxx
William Henry Finlay	clxiii
Hough (1907–)	clxvii

INSTRUMENTAL EQUIPMENT.

The Airy Transit Circle	xl
„ 7-inch Equatorial	xli
„ The Photo-Heliograph	xli
„ 4-inch Heliometer	xli
„ 6-inch Refractor	xlii
„ 7-inch Heliometer	xlii
The Astrographic Telescope	xlii
„ Victoria Telescope	xliii
„ Reversible Transit Circle	xliii
„ Three-Foot Altazimuth	xliii
„ Zenith Telescope	xliv
„ Portable Instruments	xliv

ASTRONOMICAL AND GEODETIC RESULTS.

Meridian Observations	xlv
The Cape Photographic Durchmusterung	xlviii
The Revision of the Cape Photographic Durchmusterung	lviii
Researches on Stellar Parallax	lx
Researches on the Solar Parallax	lxviii
Determination of the Mass of the Moon	lxxx
Determination of the Mass of Jupiter and the Elements of the Orbits of the older Satellites	lxxxiv
The Geodetic Survey of South Africa	ci
The Parallax of the Moon	cxxv
Occultations of Stars and Planets	cxxx
Observations of the Sun, Moon and Planets	cxxxi
The International Astrographic Chart and Catalogue	cxxxi
Investigations of the Positions of Close Circumpolar Stars	cxxxiii
Double Stars	cxxxviii
Astrophysical Observations	cxxxix
Miscellaneous Operations	cxlii
Time Signals	cxliii
The Cape Observatory (1879–1907)	cxlv
Conclusion	clxii
Appendix I. Cape Astronomers, Assistants and Computers	clxix
„ II. Cape Observatory Publications	clxxiii
„ III. Scientific Papers by Cape Astronomers other than Cape Observatory Publications	clxxv
„ IV. Translation of Dr Bahn's Article on the Geodetic Survey of South Africa	clxxix

ILLUSTRATIONS.

Ground Plan of the Observatory, and a Map of the Geodetic Survey of South Africa, in detached Sheets.

Wt. 32194/1326—300+50—6/13—N. & Co., Ltd.

Digitized by Google

DESCRIPTION OF THE CAPE OBSERVATORY.

CONTENTS.

		PAGE
Part I.	The Victoria Telescope	1
„ II.	The Spectroscope and Object-Glass Prisms	18
„ III.	The Reversible Transit Circle	36
„ III.	The Determination of the Division-errors of the Circles	84
„ IV.	The Astrographic Telescope	120
„ V.	The 7-inch Heliometer	126

ILLUSTRATIONS.

Staff of the Cape Observatory in 1879 and in 1906 . . . . . *Frontispiece.*

PART I.—THE VICTORIA TELESCOPE.

Figs. 5, 6, 7	Details of Telescope	*Facing p.* 11.
Fig. 9	Section through Clock and Base of Telescope	„ *p.* 13.
Plates I.–IV.	The Observatory	*At the end of Part I., i.e. following p.* 16.
Plate V.	The Telescope	
Plates VI.–XI.	Details of the Telescope and its Auxiliaries	

PART II.—THE SPECTROSCOPE.

Figs. 1 to 6	Original Schematic Design	*Facing p.* 18.
„ 7 to 10	„ „ „	„ *p.* 21.
Plates I.–IV.	Shewing Details of Slit	*At end of Part II., following p.* 34.
„ V.–VIII.	„ Spectroscope attached to Telescope	
„ IX.–XII.	„ other Details	
„ XIII.–XVI.	„ Thermostat and Laboratory	

PART III.—THE REVERSIBLE TRANSIT CIRCLE.

Plate I.	Section-elevation of Transit Circle and Observatory in Meridian	*Facing each other between pp.* 40 *and* 41.
„ II.	Plan of Transit Circle and Observatory	
„ III.	Section of Transit Circle and Observatory in Prime Vertical	*Following Plate II.*
„ IV.	The Transit Circle Observatory in Course of Erection	*Facing Plate V.*
„ V.	The Transit Circle Observatory Erected	„ *Plate IV.*
„ VI.	Apparatus for opening Observatory	*Following Plate V.*
„ VII.	The Adjustable Base of the Transit Circle	„ *Plate VI.*
„ VIII.	Section of the Transit Circle	*Facing p.* 43.
„ IX.	Enlarged Section through Axis of Transit Circle	„ *p.* 44.
„ X.	Clamp and Slow Motion in Declination	*Following Plate IX.*
Plates XI. and XII.	facing XIII. and XIV. The Transit Circle	„ *Plate X.*
„ XV. and XVI.	Collimator and Mounting of Long Focus Lens	*Facing p.* 46.
Plate XVII.	Mounting of Long Focus Lenses	„ *p.* 47.
„ XVIII.	Mounting of Object-Glasses at Bottom of Pits	„ *p.* 48.
„ XIX.	(Two pages facing each letter.) The Repsold Micrometer, figs. *a*, *b*, *c*, *d*	„ *p.* 51.
„ XX.	The Motor Regulator	„ *p.* 54.
„ XXI.	The Cone Apparatus	„ *p.* 56.
„ XXII.	The East and West End Views of the Circle Micrometers	„ *p.* 58.
„ XXIII.	Details of the Circle Micrometer	„ *p.* 59.

following p. 42.

PART IV.—THE ASTROGRAPHIC TELESCOPE AND OBSERVATORY.

Plates I. and II.	The Astrographic Telescope	*Facing p.* 120.
Plate III.	Plan of the Astrographic Observatory	*Facing Plate IV.*
„ IV.	Sectional Elevation in the Meridian	„ *Plate III.*
„ V.	General External View of the Observatory	*Following p.* 122.

following p. 122.

PART V.—THE HELIOMETER OBSERVATORY.

Plate I.	External View of the Heliometer Observatory	*Facing p.* 126.
Plates II. and III.	Plan and Sectional Meridian Elevation	*Facing each other following Plate I.*

Digitized by Google

ERRATA.

Page	iv.	Index, plate XIX. *for* "facing each letter" *read* "facing each other."
,,	xvii.	7th line from bottom, *for* "Johnston" *read* "Johnson."
,,	xliii.	3rd line from top, *for* "September 1901" *read* "September 1891."
,,	xlv.	6th line from top, *for* "Maclear's successor" *read* "Maclear's predecessor."
,,	lx.	Insert "t" to designate Taylor's Madras Catalogue.
,,	lx.	10th line from top, *for* "d" *read* "a" to denote Argelander's Südliche Zonen.
,,	lxii.	4th line from bottom, *for* "β Hydri" *read* "β Hydræ."
,,	lxviii.	Researches on the Solar Parallax, 2nd line, *for* "1676–78" *read* "1751–53."
,,	lxxi.	Heliometer Observations of Mars, etc., line 5, *for* "in it" *read* "it in."
,,	lxxv.	Solar Parallax, *for* "8″·0006 or 8″·0014" *read* "8″·8006 or 8″·8014."
,,	cxii.	14th line from bottom, *for* "Bight" *read* "Beit."
,,	cxxxii.	14th line from top, *for* "February 1902" *read* "February 1891."
,,	cxlvi.	21st line from bottom, *for* "p. clxiii" *read* "p. clxiv."
,,	cli.	7th line from bottom, *for* "*Sappho*" *read* "*Iris*."
,,	clii.	9th line from bottom, *for* "Foreign Office" *read* "Colonial Office."
,,	clii.	Lowest line of foot notes, *for* "in Appendix III." *read* "in Appendix I."
,,	clxi.	7th line from top, *for* "Rambaud" *read* "Rambaut."
,,	clxi.	13th line from bottom, insert "1906" on right-hand margin of page.
,,	clxiv.	*For* "vol. i. p. 497" *read* "vol. lv. p. 15."
,,	26.	*For* "Brasher" *read* "Brashear."

Digitized by Google

Digitized by Google

HISTORY OF THE CAPE OBSERVATORY.

INTRODUCTION.

THE Cape of Good Hope is intimately associated with the history of astronomy in the Southern hemisphere. With the exception of Halley's expedition to St Helena (1676–1678), no serious effort had been made to obtain exact knowledge of the Southern heavens previous to the year 1750. In that year, the Abbé de la Caille submitted a proposal to the Paris Academy of Sciences that he should visit the Cape of Good Hope and make a series of astronomical observations there. His proposal was approved, the necessary funds provided, and he sailed for the Cape on the 21st of November 1750, reaching his destination on the 19th of April 1751.

The reasons which led La Caille to select that station as the scene of his labours are not far to seek. The Cape of Good Hope was perhaps the only spot situated in a considerable Southern latitude which in these early days an unprotected astronomer could visit in safety, and where the necessary aid of trained artisans to erect his observatory could be obtained. These advantages had existed there for a century; and, besides being the most southerly point on the earth's surface then conveniently available, the Cape of Good Hope is situated nearly in the same meridian as Central Europe, so that almost simultaneous meridian observations of the Moon and planets could be made in both hemispheres for the purpose of determining their parallax. It was also of great importance to navigation to establish the longitude of the Cape with considerable precision, and La Caille proposed to do so by observations of the times of occurrence of the eclipses of Jupiter's satellites compared with corresponding observations in Europe. In these days there was an uncertainty of many miles as to the longitude of the Cape. To secure a fresh and well-determined departure from a point which would be sighted or touched by most vessels bound to or from the East Indies, was a matter of such practical importance that it furnished a powerful argument for smoothing La Caille's path, and was accepted by the Dutch Governor (Tulbagh) as a sound reason for giving La Caille a hearty welcome, building an observatory for him, and affording him every aid.

La Caille established his observatory in the courtyard of a house in Strand Street, Cape Town, and there laboured unremittingly, except during the short periods when he was occupied in terrestrial survey. He finally left the Cape, in accordance with instructions from his Government, on the 8th of March 1753. In the course of little more than a single year of actual observation, he compiled the material for his catalogue of 10,035 stars (*Cœlum Australe Stelliferum*, 1763), and made observations of the Moon and the planet Mars, from which, in combination with corresponding observations in the Northern hemisphere, he derived the then most reliable values of the lunar and solar parallax. Within the same short period he also measured the first arc of meridian in the Southern hemisphere, and made observations of Jupiter's satellites from which he derived a very approximate value of the longitude of Cape Town.

When it is remembered that La Caille did all this work single-handed, one is lost in amazement at the energy and capacity of the man. In the course of a single year he laid the foundations of sidereal astronomy in the Southern hemisphere; he pointed the way to the geodetic survey of South Africa; he indicated the lines of research which subsequent astronomers at the Cape have followed; he rendered many scientific services to the Dutch Government of the day (including a sketch-survey of Houts Bay), and won the love and friendship of all who knew him.

The site of La Caille's observatory was formerly marked by a peculiar sundial erected by him—but another house has now been built on the ground. At the ordinary meeting of the South African Philosophical Society (now

Digitized by Google

the Royal Society of South Africa), held on the 31st of July 1901, the following resolution was, on the recommendation of the Council, brought before the Society and unanimously adopted :—

"That the Society take steps to have a commemorative tablet of the Abbé de la Caille erected on the house now built on the site of the Abbé's residence in Cape Town in 1752."

That bronze tablet is now erected. It was designed as a labour of love by Messrs Herbert Baker and Masey, architects, of Cape Town. It bears, as astronomical symbols, the stars of the Southern Cross and La Caille's quadrant, with geometrical figures representing the plan of the triangulation in his measurement of an arc of meridian.

Soon after the second British occupation of the Cape, it appears to have occurred to the scientific authorities of the day that the time had arrived to follow up the pioneer work of La Caille, and to take steps for placing the astronomy of the Southern hemisphere more on an equal footing with that of the Northern one. The first official document which relates to the establishment of the Royal Observatory at the Cape is the following Minute in the records of the Board of Longitude :—

"At a meeting of the Commissioners appointed by Act of Parliament for more effectually discovering the longitude at sea, held at the Admiralty on Thursday the 3rd of February 1820 :—

"Present,—Lord Viscount Melville (First Lord of the Admiralty), the Right Honourable Sir Joseph Banks, Bart. (President of the Royal Society), John Wilson Croker, Esq., John Barrow, Esq. (Secretaries to the Admiralty), Davies Gilbert, Esq., M.P., Robert Woodhouse, Esq., John Pond, Esq. (Astronomer-Royal), Rev. Dr Robertson, (Savilian Professor of Astronomy), S. P. Rigaud, Esq. (Savilian Professor of Geometry), Very Rev. Dean Milner (Lucasian Professor), Rev. W. Lax (Lowndean Professor), Dr Wollaston, Captain Kater, Major-General Mudge (Resident Commissioners).

. . . . . .

"9. Mr Gilbert proposed that the Board should take into consideration the propriety of the establishment of an observatory at the Cape of Good Hope, which he observed was likely to be highly conducive to the improvement of astronomy. The motion was seconded by Sir Joseph Banks, who gave it as his opinion that nothing could more essentially promote the glory of this country than to be the foremost in such an undertaking. The Committee of Instruments and Proposals, with the addition of Sir Joseph Banks, Mr Gilbert, and Mr Pond, was desired to draw up a statement of the most eligible plan for such an observatory, with an estimate of the probable expense. To meet on Thursday the 17th, at 2."

(It appears incidentally that the Committee of Instruments and Proposals above mentioned consisted of Dr Wollaston, Captain Kater, General Mudge, and Dr Thomas Young.)

At the meeting of 1820 April 6, the following Report was brought up from the Committee :—

"ADMIRALTY, 17*th February* 1820.

"The Committee resolved that, since a considerable time will be required for the establishment of a complete observatory at the Cape, on account of the difficulties arising from the abundance of sand in most parts of the country, and from other local circumstances, the Committee therefore recommend the appointment of an astronomer at the Cape as soon as a proper person can be found, and that he be sent out with portable instruments, in order to enable the Committee to form a better judgment of the arrangements that will be required; but that, in the meantime, the principal instruments be ordered to be put in hand for the observatory, on the same scale as those at Greenwich, and as much as possible on the same construction."

The Committee was desired to continue its attention to the establishment of an observatory at the Cape, and to procure estimates of the expense of the necessary instruments on the scale proposed, and to report to an extraordinary meeting of the Board in three weeks.

At the meeting of 1820 April 27, the following Report of the Committee was presented :—

"*Thursday*, 20*th April* 1820.

"The following estimates were received from Messrs Troughton, Dollond, and Jones, for the instruments required at the observatory to be established at the Cape of Good Hope :—

"Mr Troughton—

"A 25-foot zenith telescope.	£300	0	0	
"Object-glass by Dollond	100	0	0	
"Ironwork by Jessop and Donkin	300	0	0	
				£700 0 0

Digitized by Google

Brought forward				£700 0 0
"Mr Dollond—				
"A transit	£500	0	0	
"A Newtonian 7-foot telescope, 9-inch aperture	210	0	0	
"Two 46-inch achromatics, with various improved micrometers and extensive fields of view	315	0	0	
				1025 0 0
"Mr Jones—				
"A 6-foot mural circle				787 10 0
"Total				2512 10 0

"The whole to be completed in two years, and a part of the payment to commence as the work goes on."

Mr Pond observed that the equatorial sector now at Greenwich might be spared for the Cape, as well as a 6-feet Newtonian telescope by Short, which would supersede the necessity of a new reflecting telescope, and reduce the estimates to £2300.

It was ordered that the respective artists should be desired to proceed in their undertakings without loss of time, and that the Committee should use their discretion from time to time respecting the advance of money to Mr Jones and to Mr Dollond in proportion only to the work actually performed.

These Minutes were communicated by Dr Young, Secretary of the Board of Longitude, to Mr Barrow, Secretary of the Board of Admiralty, by letter, dated 1820 July 22. The Board of Admiralty expressed in their Minute their entire concurrence in the proposal, and proceeded to make the requisite communications to the Treasury and the Colonial Office.

On 1820 October 9, Mr Goulburn, Secretary of the Colonial Office, addressed a letter to Mr Croker, Secretary of the Admiralty, stating that Earl Bathurst, His Majesty's Principal Secretary of State for the Colonial Department, fully concurring in the view which the Board of Admiralty had taken of the expediency of erecting an observatory at the Cape of Good Hope, had, in compliance with their Lordships' recommendation, instructed the Governor of the Cape to allot a suitable piece of ground for the purpose, at the expense of the Colonial Government, and in such a situation as the astronomer whom their Lordships might send out may think fit and eligible, and, moreover, to lend every possible assistance towards carrying into effect the object in view.

Finally, the observatory was established by the following Order in Council, dated 1820 October 20 :—

"At the Court at Carlton House,

"the 20th October 1820,

"PRESENT—

"THE KING'S MOST EXCELLENT MAJESTY IN COUNCIL.

"Whereas there was this day read at the Board a Memorial from the Right Honourable the Lords Commissioners of the Admiralty, dated the 16th instant, in the words following, viz. :—

"The Board of Longitude having resolved that it would be highly conducive to the improvement of practical astronomy and navigation that a permanent observatory should be established at the Cape of Good Hope, which would afford a series of comparative observations made under circumstances the most favourable for correcting the unavoidable imperfections depending on the instruments employed and on the materials surrounding them, by a countervailing tendency to equal and opposite errors. And the Board of Longitude having on these grounds most earnestly recommended to us the establishment of such an observatory at the Cape of Good Hope, and represented to us by their secretary's letter of the 22nd July last that the instruments which would be required would cost, according to the best estimate they can form, about £2300, besides the expense of the building itself, which cannot be estimated in this country, and that they would propose that the establishment should consist of the persons with the salaries following, viz. :—

"One astronomer	£600 per annum.
"One assistant	250 ,,
"One labourer	100 ,,

Digitized by Google

"We beg leave with all humility to represent to Your Majesty that we concur with the Board of Longitude in the expediency of erecting an observatory at the Cape of Good Hope, and that the establishment of persons with the salaries proposed appears to us to be necessary and proper; and we therefore most humbly propose to Your Majesty, that Your Majesty would be graciously pleased by Your Order in Council to authorise us to cause an observatory to be erected at the Cape of Good Hope accordingly; and to direct that the establishment thereof shall consist of the persons with the salaries proposed by the Board of Longitude, the said salaries to be placed on the ordinary estimate of the Navy.

"And we further with all humility represent to Your Majesty that Mr Lushington has acquainted us by his letter of the 9th August last, that the Lords Commissioners of the Treasury concur in the expediency of the measure and in the propriety of granting salaries of the amount above mentioned as an inducement to men of science to accept the situations proposed to be established.

"His Majesty having taken the said Memorial into consideration, was pleased, by and with the advice of his Privy Council, to approve of what is therein proposed; and doth hereby authorise the Lords Commissioners of the Admiralty to cause an observatory to be erected at the Cape of Good Hope, and to order that the establishment thereof should consist of the persons with the salaries therein mentioned, as proposed by the Board of Longitude, the said salaries to be placed on the ordinary estimate of the Navy.

"(Signed) JAS. BULLER."

FALLOWS (1820-1831).

On the 26th of October 1820, the Rev. Fearon Fallows, M.A., Fellow of St John's College, Cambridge, was appointed H.M. Astronomer at the Cape.

Previous to his appointment Fallows appears to have had no experience in practical astronomy, but there is not the slightest doubt that he had all the essential natural qualities for its successful pursuit.

Born at Cockermouth in Cumberland, on the 4th of July 1789, and brought up to his father's trade of hand-loom weaving, Fallows devoted from childhood his every spare moment to study. His father was a man of considerable information and studious habits, and devoted much of his spare time to the education of his child, especially in the field of arithmetic and geometry, in which his son chiefly delighted. As a mere boy Fallows' constant companion at the loom was a mathematical handbook. The Rev. H. A. Hervey, vicar of the neighbouring parish of Bridekirk, to whom Fallows' father acted as parish clerk, was much struck by the originality and acquirements of the lad. On his recommendation Fallows was engaged, at the age of nineteen, as an assistant by Mr Temple, at that time headmaster of Plumbland School. After Temple's death in 1808, Fallows was enabled by the patronage of some gentlemen of fortune and interest to enter St John's College, Cambridge, whence he graduated as Third Wrangler in 1813, Sir John Herschel in the same year being Senior Wrangler, and Dean Peacock second. He held a mathematical lectureship in Corpus Christi College for two years, and was then elected to a Fellowship of St John's. He was Moderator, or principal examiner, in the University in the year 1818, and, as already stated, was appointed astronomer at the Cape on the 26th of October 1820.

Fallows at once took steps to further prepare himself for the important duties which he had undertaken. During the months which intervened between the date of his appointment and that of his departure for the Cape, he visited the public and private observatories of England, studied the instruments and their use, and spent much time in the principal workshops where astronomical instruments were made. On the 1st of January 1821 he married Miss Mary Anne Hervey, eldest daughter of his early friend and patron, the Rev. H. A. Hervey, vicar of Bridekirk.

On 1820 November 28, Dr Young wrote to Mr Barrow, recommending Mr Fayrer as first assistant to Mr Fallows. It is stated in this letter that Mr Fallows, together with Mr Rennie (whom the Admiralty had consulted in quality of engineer), had agreed on the general plan of the observatory. Apparently the plan then sketched is the same which was ultimately adopted: the ground-plan being in the form of the letter H: the intermediate part containing the rooms for meridional observations; the wings, containing the residences of the astronomer and his assistants, being surmounted by domes for equatorials.

On 1821 February 5, Dr Young transmitted to Mr Barrow the draft of instructions for the astronomer at the Cape Observatory, which (as was stated in the letter) had been drawn up by the Committee of the Board of Longitude appointed for the purpose. They are as follows:—

Digitized by Google

"INSTRUCTIONS FOR THE ASTRONOMER AT THE CAPE OBSERVATORY.

"1. In the choice of the situation for the observatory he is to bear in mind the necessity of avoiding the sandy dust which pervades many parts of the colony, and the advantage of having a bright star within a minute or two of the zenith, if possible.

"2. Before the completion of the observatory, he is to employ himself in making an approximate catalogue of the Southern stars with the portable transit-instrument and equatorial which have been provided for him; and to take measures for determining the latitude of La Caille's observatory.

"3. When the observatory is completed and the instruments fixed, he is to make his observations as much as possible of the same kind and in the same manner as the Greenwich observations have been usually made; to employ the same stars where it can be done conveniently; and to draw up the register in the same form, in order that the whole may constitute two corresponding series capable of comparison in all their parts.

"4. He is to pay particular attention to the rediscovery of the comet of 1819, according to the places calculated by Professor Encke for 1882.

"5. He is to neglect no opportunity of making any observations capable of improving the theory of refraction.

"6. He is to send to the Secretary of the Board of Longitude every six months a correct copy of all his observations, prepared for publication (in order that the same may be transmitted to our secretary)."

The Board of Admiralty approved of these instructions, and directed that they should be sent, with the addition of the last clause, to Mr Fallows.

At the meeting of the Board of Longitude on 1821 February 1, "Mr Rennie's sketch for the observatory at the Cape was approved, and it was resolved that he should be desired to prepare a plan in detail." This resolution was transmitted by Dr Young to Mr Barrow on February 29 (perhaps February 9 or 19). The Board of Admiralty gave instructions, through the Navy Board, to take proper steps for building the observatory, but to delay active measures until the site should be selected and approved.

Mr Fayrer was appointed assistant to Fallows, under an Admiralty warrant dated 28th November 1820.

By an Admiralty letter dated 7th April 1821, Mr Fallows was informed that he was to embark on that date on board the *Sappho*, with his family, together with the assistant astronomer and his sister. It appears, however, from Sir George Airy's account (*Mem. R.A.S.*, vol. xix. p. 8), that he did not finally sail until the 4th of May, and that he arrived at Cape Town on the 12th of August 1821.

In the course of the remaining part of the year 1821, Mr Fallows examined the ground in the vicinity of Cape Town to a considerable extent. Having ascertained, with the assistance of Captain (afterwards Lieut.-Col.) Everest, who had then touched at the Cape, that the house in which La Caille's observations were made was undoubtedly the same as that occupied in 1821 by Mr De Witt, he, in the first place, made observations on the fitness of the house next to Mr De Witt's as a site for the observatory; but finding the view much interrupted, he tried several stations in the country. Apparently Mr Fallows was guided mainly by the first precept in his instructions, "to bear in mind the necessity of avoiding the sandy dust," for all the stations tried were elevated points above the drift of the sand. He examined in succession four stations, to which he has referred by the following names: "Blue-berg," "A spot near Mr Coetsey's farmhouse" (thus described in the original), "Elephant's Head," and "Tiger Hill," and adopted provisionally the last. He remarked, however, that there was no water or grass on the hill; and that no very bright star passed near its zenith; some smaller stars passed near it, and *Phaut* (α Columbæ) at the distance of 21′. A very elaborate report (preserved at the Admiralty) detailing these examinations and conclusions, and also proposing the verification and extension of La Caille's arc of meridian, was transmitted to the Board of Admiralty, and by them to the Board of Longitude, who referred it to the Committee for Instruments and Proposals. At a meeting of the Board of Longitude on 1822 February 7, the Committee brought up the following Minutes of a meeting on 1822 January 3:—

"Mr Fallows' Report to the Admiralty of his proceedings at the Cape of Good Hope was laid before the Committee, and it was agreed:—

"1. That, as far as can be judged by persons unacquainted with the country, the situation of Tiger Hill appears the best adapted for the building of an observatory; and that it be recommended to the Lords Commissioners of the Admiralty to afford the astronomer such means as he may find necessary for diminishing the economical inconvenience of that situation.

"2. That the remeasurement of La Caille's arc, with the objections which Mr Fallows has pointed out to the

Digitized by Google

accuracy of the direction of the plumb-line at its extremities, does not appear to the Committee to be particularly desirable at present; and that the instruments required for conducting the operation with perfect accuracy could probably not be completed in less than four or five months at the least; but that at a future time it would be highly desirable that a more extended arc of the meridian should be measured near the Cape; and they beg leave to suggest, that, if the Board of Longitude at large concur in this opinion, a zenith sector and a theodolite, with proper chains and other apparatus for measuring a base, should be added to the list of instruments already ordered.

"3. Mr Fallows being in want of a good reflecting telescope, Captain Kater is requested to make inquiry respecting one which is said to be in the possession of Sir Henry Englefield, and which may probably be obtained. It was also resolved that inquiry be made respecting a telescope of Sir William Herschel belonging to the observatory at Glasgow."

The opinion of the Committee was adopted, but it was agreed that for the present it was unnecessary to provide the instruments in question, subservient to the measurement of an arc of the meridian.

At the meeting of 4th April 1822, letters of Mr Fallows to the Admiralty were communicated, announcing the appointment of Mr Skully as second assistant, which the Board recommended the Admiralty to sanction; and also stating that the proximity of a bright star to the zenith of Tiger Hill rendered it a desirable position for the observatory.

In a letter from Mr Fallows to Mr Barrow, dated 1821 December 12, the want of a better clock than that now at the Cape, and the want of a large reflecting telescope, are urged. It appears also that Mr Fallows had begun to entertain doubts on the fitness of Tiger Hill for the site of the observatory, as it was very frequently covered with clouds.

On 1822 March 8, Mr Fallows wrote more decidedly to Mr Barrow, intimating his positive abandonment of Tiger Hill. The prevalence of sand-drift made it difficult to select a proper place, but he finally fixed on a spot between Liesbeck River and Salt River. This is the place on which the existing observatory is built. It appears that this letter was communicated to the Board of Longitude, as Dr Young, in a letter to Mr Barrow, dated 1822 July 4, conveys their approval of the change, although no mention of it is to be found in the Minutes of the Board of Longitude.

Having regard to the condition that the site must be on Government property (for apparently no provision was made for the purchase of a site from a private owner), and to the further condition that it should be visible from Table Bay, so that time-signals might be given from the observatory to vessels in the anchorage, that selected by Fallows was probably the best available. It commands an excellent view of Table Bay, a clear horizon to the north, south, and east, but from W. to S.W. the view of the horizon is cut off by Table Mountain—in some azimuths to the extent of 8° in altitude—a circumstance which has, from time to time, limited the evening observation of comets situated near the sun.

In the days of Fallows this site was part of a bare, rocky hill, covered with thistles, infested with snakes (its name was Slang-Kop, or Snake Hill); the jackals howled dismally around it at night, and a guard of soldiers had to be established to protect the property from theft. To give some idea of the wild character of its surroundings, a member of the Maclear family told the writer that in Fallows' days a hippopotamus found its way from Berg River into the treacherous marsh which then existed about half a mile from the observatory, near to the site of the present railway bridge at Maitland. The poor animal sank in the mud so deep as to be unable to get out, and was killed by the neighbouring farmers. The story goes that their bullets could not pierce the animal's hide, so they cut holes in the hide, and fired through them. The following incident rests on the same authority. After the observatory building had been nearly completed, but before the scaffolding and ladders had been removed, Fallows went into the mural circle room one evening, after the workmen had gone, to test the opening of the shutters. He had prided himself on the design of these shutters and the ease with which any particular shutter could be opened. But on pulling the rope to open the shutter for observing zenith stars, he found that the shutter would not move. He ran up the staircase leading to the roof, peeped out of the door at the top, and there, comfortably seated on the central trap-door of the meridian opening, was a large leopard (the so-called Cape tiger). The astronomer and the leopard both rapidly disappeared in different directions.

It would be tedious to describe the various negotiations which were entered into for extending and consolidating the observatory property. Some of them were carried out by Fallows, some by later astronomers. Finally, by purchase or exchange, the valuable and convenient site shown on the accompanying map was secured. Many years afterwards, under Gill's directorate, proper beacons were established, with the attested consent of the adjoining

Digitized by Google

proprietors. These beacons were then connected by a sworn Government surveyor (Mr Melville), employed for the purpose, and the new diagram was recorded in the Surveyor-General's office as an indisputable title, under an Act of the Cape Parliament which provides for the granting of such titles, when the above-mentioned conditions have been complied with. The attached map is based on Mr Melville's survey, with the original co-ordinates given, as the Act requires, in Cape feet. The levelling operations for the contour lines were executed by members of the observatory staff, and are given for each 4 feet (English) above mean sea-level at Cape Town. The floor of the main building is 36·17 English feet above mean sea-level.

But to return to Mr Fallows and his work. On the 29th of September 1821 he applied, through the Naval Commander-in-Chief, to His Excellency Sir Rufane Donkin, the Acting Governor, for a settler's wooden hut in which to erect the portable astronomical instruments which he had brought from England, for use during the erection of the observatory proper. This hut he converted into a temporary observatory, and erected it in the garden of a house in Cape Town situated not far from the site where Wales and Bayley had made their observations. There, with the altitude and azimuth instruments by Ramsden (30-inch vertical circle), and the transit instrument by Dollond (1·62 inches aperture and 19½ inches focal length), Fallows, during the latter half of 1821 and the early part of 1822, made the observations from which he derived the approximate places of 273 stars between the zenith of Cape Town and the South Pole, published in the *Phil. Trans. R.S.*, 1824, p. 457.

On the 8th of April 1822, upon the recommendation of Fallows, the Admiralty approved the appointment of a person named Skully to be paid "as labourer," under the authority of the Order in Council, "provided he be a person in all respects fit for the situation." In May 1822, Fallows reported to the Board of Longitude that Mr Fayrer was about to quit him, and recommended that the Rev. Mr Skully should be appointed to succeed as first assistant; but apparently Fallows was not officially informed of this until the 4th of April 1823, when he received intimation from Simon's Town that his recommendation had been approved and that Mr Skully's appointment would date from the 20th of November preceding.

This is apparently the same Mr Skully who was originally appointed as "labourer." Possibly sympathy for a fellow-clergyman in distress led to his original appointment in the only capacity—that of labourer—in which Fallows could then employ him; but it is difficult to explain why he recommended him for assistant. On the 5th of October 1824 the Admiralty informed Fallows that an assistant astronomer would be sent out in room of Mr Skully, who had that day been dismissed from the office in question.

Meanwhile, on the 21st of November 1822, the Admiralty, seeing that a site had been definitely fixed upon, issued a warrant for building the observatory. They recommend that, if practicable, the works should be executed by a contract, and state that detailed plans for the astronomer's guidance were being prepared, and would be sent to the Cape when completed. On the 4th of August 1823, Fallows is informed through the Colonial Secretary that, in consequence of an application from the naval storekeeper, a surveyor, Mr Knoble, had been instructed to accompany Mr Fallows to the spot intended for the observatory, "to measure off what was wanted for the object."

The following advertisement appears in the *Cape Town Gazette and African Advertiser* of Saturday, 5th February 1825:—

ROYAL OBSERVATORY.

NOTICE is hereby given to such persons as may be willing to contract for the BUILDING of the ROYAL OBSERVATORY upon the site fixed on, between the Liesbeck and Zwart River,* contiguous to the farm of Mr Mostert, that proposals for the same will be received by the respective officers of the Naval Department at Simon's Town, on Monday the 14th of February next at noon. The conditions of the contract, with the specification of the materials to be used in the building, may be seen, and any further information obtained on application to the Rev. Fearon Fallows, His Majesty's Astronomer, Garden Zorg en Lust, Cape Town, or at the Naval Office, Simon's Town.

No proposals will be attended to but from persons fully competent to the execution of the work, and who can provide the most satisfactory security for the due fulfilment of the contract.

W. PENNELL, Naval Officer.

SIMON'S TOWN, *January* 28, 1825.

On the 15th of February 1825, the naval storekeeper at Simon's Town forwarded to Mr Fallows a copy of the warrant from the Navy Board, dated 21st November 1822 (already mentioned), and stated that the plans having been received, and tenders invited, that of Mr Cannon was the most reasonable, and had been accepted.

From this time Fallows appears to have taken up his quarters on the site of the observatory and to

* The Zwart River is now called "Salt River."

Digitized by Google

have lived in a hut, or some temporary building, on the spot, in order to determine the lines of the building and superintend the workmen. The foundations were dug out, under his supervision, before the arrival of the clerk of works.

A most efficient clerk of works—Mr Skerrow—was then appointed, and the work proceeded.

In spite of many inquiries, the writer has been unable to ascertain why the original order to commence the building (issued on the 21st of March 1822) was not put in force until the 15th of February 1825. Apparently the plans had been mislaid in some office in London; but that, surely, was no reason for keeping Fallows idle at the Cape. New plans might have been prepared, or more immediate and efficient search made for those that were missing. It is difficult to imagine conditions more disheartening than those which Fallows had to encounter during this period. He had left his comfortable Fellowship at St John's, full of zeal to found exact astronomy in the Southern hemisphere. He had done what he could with portable instruments to create a working catalogue of stars, and he had every right to expect that he would then be in a position to superintend the erection of the new observatory and its instruments.

The Whigs came into power in 1827, and, in a fit of ill-advised economy, cut off £10,000 from the estimates for completing the buildings and grounds. The main building was, in a manner, completed at the end of June 1827, but it was a mere block of masonry on an exposed rocky hill, without enclosure, without roads, without adequate water-supply, and without stabling or outdoor accommodation of any kind. In answer to an application for a small grant of money for planting trees to afford protection from wind and dust, Fallows was informed, by Admiralty letter of the 8th of October 1827, that if he had any desire to beautify the grounds, it must be at his own expense. This is but one of the many instances of the parsimony and want of consideration with which Fallows was treated at the time.

There was much delay in erecting the piers for the instruments. Fallows demanded the employment of very large blocks of stone, which, in the absence of roads, involved great difficulty of transport, the construction of a special wagon, and its frequent repair. He had very peculiar views as to the best manner of preparing the foundations, insisting that, in order to ensure freedom from vibration, a thick layer of pot-clay should be rammed down upon the underlying rock or gravel, and the piers be then built on this bed of clay.*

Mr Skerrow, the Admiralty clerk of works, was at this time so much occupied with other Government works that he was unable to give constant attention to the completion of the observatory; thus it was not until towards the end of 1828 that the piers for the instruments were erected, and the main building finished. The building is of the form of the letter H, the quarters of H.M. Astronomer in the west wing, those of the chief assistant in the east wing. For extra meridian observations copper domes of 14 feet in diameter were mounted over each wing; but, as they could only be reached by ladders and their floors were attached to the wooden beams of the flat roofs without piers or other supports for the instruments, they were entirely useless. The transit and circle rooms are each 24 feet square and 16 feet in height; the intervening sector room has a like area, but is sufficiently high for the accommodation of a 25-foot tube.

Meanwhile, on the 5th of July 1826, the Admiralty informed Mr Fallows that Captain Ronald, under a warrant of the 1st of December 1824, had been appointed assistant in succession to Mr Skully (dismissed), and that he would sail for the Cape in the merchant ship *Susanna*, charged with the conveyance of the large mural circle and other valuable instruments for the observatory. Mr Fallows was at the same time instructed to consult with Captain Ronald as to the practicability of measuring an arc of meridian, and to state what instruments would be required for the purpose.

During the eighteen months which elapsed between his appointment and the date on which he sailed for the Cape, Captain Ronald appears to have been occupied in supervising the construction of the instruments, and studying the use of similar instruments at Greenwich.

On the arrival of Captain Ronald, towards the end of 1826, Fallows secured a substantial storehouse in Cape Town for the reception of the instruments until everything had been prepared for their reception at the observatory. In July 1827 the instruments were conveyed from Cape Town under the personal supervision of Mr Fallows, and carefully lodged in one of the rooms in the eastern wing of the observatory, until the piers were ready for their reception.

Fallows remarks: "It ought to be borne in mind that the Cape cannot provide intelligent workmen enough

* It is hardly necessary to explain the unsoundness of this plan. Clay is the very worst kind of foundation on which to erect astronomical instruments, because of its liability to swell or change its form by damp. The variations of azimuth and level of the present non-reversible transit circle at the Cape (which rests on Fallows' original foundations of the mural circle) are probably largely due to this layer of clay. (See *Annals of the Cape Observatory*, vol. i. part 5.)

Digitized by Google

to raise so heavy an instrument upon its pier without the utmost caution on the part of the person who directs the operation. Had it not been for the aid which I received from our *then* clerk of works, John Skerrow, Esq., I hardly know how the thing would have been accomplished, though these things are *trifles* in London."

But at last the transit instrument, the mural circle, and the new Harrison clock were duly mounted, and Fallows devoted himself in the first place to observations with the transit instrument. On the 29th of November 1829 he transmitted to the Secretary of the Admiralty two thousand observations made with the transit instrument, and a number of pendulum observations made during the same year. Fallows apparently made three sets of pendulum observations, the first of these in a temporary building, situated S.E. of the main building, the second in the central hall (or zenith sector room), the third also in the central hall, with the plane of vibration at right angles to that of the second series. The third series was not completed, as he discontinued it to permit Captain Foster to occupy the site.

On the 15th of January 1830 he forwarded to the Secretary of the Admiralty a set of moon culminating observations, and explains their importance for determining the longitude of the Cape. He also reports his intention to bestow the whole of his time for the next few months on the mural circle. He writes of the difficulty of bringing new instruments into adjustment, and the long time required to do this. He adds: "The transit instrument has now been under trial for nearly eight months, and I can assure their Lordships that it is a right good one. I hope sincerely it may fall to my lot to be enabled to give their Lordships the same character of the mural; at any rate, I shall do my best with it."

One might have expected that Fallows' troubles were now in great part over. But the mural circle, to the use of which he had looked forward with so much pleasure and interest, proved to be a source of bitter uneasiness to him. Fallows found that the index-error of two opposite microscopes was ever variable for different circle readings, in a manner that could not be accounted for either by imperfection of form of the pivots or of the circle itself. He came finally to the conclusion that some permanent injury had been received by the circle and axis, from a fall which the packing-case received whilst it was being hoisted from the hold of the ship at Cape Town, but that, upon the whole, the result from the mean of six microscopes might be relied upon. This final conclusion was subsequently confirmed by Henderson, his successor.*

On the 12th of May 1830 Fallows reported to the Admiralty that he is shortly to be deprived of the services of Captain Ronald, whose health had been for some time declining under the fatigue of his duties, and recommends him to the favourable consideration of their Lordships. He also states that Mrs Fallows had discovered a comet in the constellation Octans, adding: "We have observed it"; and that in Captain Ronald's absence he has no alternative but the employment of Mrs Fallows at one of the meridian instruments. He passes severe strictures on the inefficiency of Fayrer (now employed as "labourer"), who, it seems, did little beyond slight repairs to instruments, and was totally unfit for the office of assistant astronomer during Captain Ronald's absence. Should the latter not return to the Cape, Fallows expresses the hope that their Lordships will appoint a properly qualified person to succeed him, and that "a decided preference would be given to a married man, and a staunch member of the Church of England."

On the 19th of September 1830 Fallows reports general sickness in the establishment. Bilious attacks had been succeeded by scarlet fever, from which Mr and Mrs Fallows, as well as his assistants, had suffered severely. Captain Ronald left residence at the observatory on the 28th of August 1830, and sailed for England on the 17th of October following.

* Sir George Airy (*Mem. R.A.S.*, vol. xix. p. 27) writes on this as follows:—"A continuation of the history of this instrument will be found in the *Memoirs of the Royal Astronomical Society*, vol. v. (Mr Sheepshanks), and vol. viii. (Mr Henderson). Mr Sheepshanks, from a complete set of readings of the six microscopes at every 10° reading of the circle-pointer, deduced the movements of the centre of the circle; and these were found to be so extravagant as to account for a sensible part of the discordance of the microscope readings. Some deductions were drawn from these by myself (in an appendix to Mr Sheepshanks' paper), and by Mr Henderson, as to the form of the pivot. Still a considerable irregularity remained in the microscope readings, unexplained by any fault of the pivot.

"In 1840 this circle was sent to the Royal Observatory, Greenwich (another circle, by Mr Jones, of the same form and dimensions, and probably equal to any in the world, having been sent to replace it at the Cape), and after some examination of its large pivot, which was evidently deformed, Mr Simms proceeded under my direction to re-turn it, when, to our great astonishment, the steel collar of the pivot was found quite loose, having been attached merely by soft solder. A new collar was mounted in the usual way, by heating on, and was very carefully turned, and the instrument was adjusted for use. It was not, however, actually used till the summer of 1848 (during an interruption in the use of Troughton's circle), and the details of those observations are given in the *Greenwich Observations* 1848. From these the reader will see how great are the errors of division, as freed from sensible error in the form of the pivot.

"To this account I have only to add that there is not the smallest appearance of mechanical injury to the instrument. And I think it most possible that the first cause of the discreditable state of the divisions is the form of the pivot, by which every division should be affected (the graduations having been made in Troughton's manner, and no opposite divisions having been examined at the same time for provisional errors). Mr Henderson and Mr Maclear, as well as Mr Fallows, were perfectly satisfied with the result given by the mean of the six microscopes; and my own use of the instrument has given me the same confidence in its accuracy."

Digitized by Google

On the 12th of November 1830 Fallows transmitted some observations made with the new mural circle; three days later he sends some observations of the planet Uranus, and, on 22nd November, observations of Mars for parallax. On the 4th of January 1831 he forwards moon culminating observations, and requests that they may be placed in the hands of Captain Beaufort. He states that he is greatly in arrear with computation and unable to send home any regular work.

On the 30th of June 1831 he reports that he had been compelled to engage a clerk to assist in the duties of the establishment, that he had paid a Mr James Robertson £10 in the month of December, and a subsequent salary at the rate of £100 a year. This is apparently his last official letter. It appears that Captain Ronald had hoped that he would soon be able to return to his duties as assistant astronomer at the Cape, but he finally resigned his office on the 29th of March 1831. On the 23rd of June of the same year Lieutenant Meadows was appointed as his successor. The Admiralty, on learning of Fallows' illness, hastened Lieutenant Meadows' departure as much as possible. He did not, however, arrive at the Cape before Fallows' death. The attack of scarlet fever from which Fallows suffered in the middle of 1830, following upon the anxiety and worry which the imperfection of the mural circle had caused him, seems to have severely undermined his constitution. Towards the end of March 1831 he went to Simon's Town, but the rest and change came too late, and he died on the 25th of July 1831, in the forty-third year of his age. At his own request his remains were buried in the observatory grounds. The spot is marked in the map, on the border of the lawn due south of the entrance to the main building. A flat tombstone of black Robben Island stone covers his grave.

Immediately after the death of Fallows, Commodore Schomberg, the Naval Commander-in-Chief at Simon's Town, went to the observatory, and, finding no regular appointed assistant there, put it in charge of the Rev. John Fry, chaplain of H.M.S. *Maidstone,* in whom Fallows had great confidence, and he retained that charge till the arrival of Lieutenant Meadows.

Fallows was a man of the highest integrity of character and clearness of understanding in matters scientific. But he was wanting in that knowledge of men and affairs and in that force of character which are requisite to create a new department, and to compel the powers that be to consider requirements and conditions of which they have no previous experience.

It was said of Fallows by a well-known contemporary astronomer: "It is difficult to conceive a man of such simplicity of character and such absence of knowledge of the world in the nineteenth century." The secluded life of his early years and his subsequent purely academic experience were not sufficient training for the kind of work that Fallows had to do before his observatory was built and organised. He had apparently little capacity for dealing with men—as is evident from his experience with his assistants—and it is clear from the official correspondence that his deficiency in this respect, and in business matters generally, produced an unfavourable impression at the Admiralty. Probably this difficulty was increased by the fact that, previous to August 1829, all Fallows' official correspondence with the Admiralty was conducted through the naval storekeeper at Simon's Town. On the 3rd of August of that year Fallows is directed by Mr J. W. Croker to address his letters in future to the Secretary of the Admiralty, and to write his official letters on the usual foolscap paper. After this, matters improved. But, whatever may have been Fallows' shortcomings in business matters and knowledge of the world, there can be no question as to his devotion, earnestness, and capacity as an astronomer. There can be no excuse for the treatment to which he was subjected by delays in sending out the plans of the observatory, and the unprotected and unworkable condition in which the establishment was left when supplies for its completion were cut off.

Fallows did his best to improve the amenities of his surroundings. During the time that the observatory was being built he opened a school and taught the children of the neighbouring farmers. His fee was a load of earth for each lesson, and to this circumstance the site is now largely indebted for the soil that covers it.

Fallows used the large S.W. room as a chapel, and it was there that the first regular services of the Church of England were held in South Africa. Baptism was administered there by him in 1828, and a marriage solemnised in July 1831.*

A letter from Commodore Schomberg to the Admiralty, dated 8th April 1831, acquainting them with Mr Fallows' serious illness, contains the following passage:—"Mr Fallows has always complained of want of proper assistants, and I am justified in saying that, had it not been for Mrs Fallows' efforts, some of his very important observations would have failed on different occasions, when more than one individual was indispensably required."

There is no doubt from other evidence that Mrs Fallows, after the departure of Captain Ronald, took an active and capable part in the observations with the mural circle, whilst her husband was engaged in observations with

* The marks where the altar rails were attached to the eastern wall are still visible.

Digitized by Google

the transit instrument. It was fitly by her hands that Mr Robertson's copies of her husband's observations were conveyed to England, where she arrived on the 15th of December 1831.

Fallows did not leave his observations completely prepared for publication, although the current reductions were far advanced. They consisted of about 3000 transits, several hundred observations with the mural circle, and some series with the invariable pendulum. Sir George Airy, with that energy and zeal for which he was so conspicuous, undertook to complete the reductions, and to prepare the whole for press. The results were finally published by him in the *Memoirs of the Royal Astronomical Society* (vol. xix. pp. 1–102),—a Catalogue of 425 Stars, of which, however, only 88 are observed in declination. There is also a series of observations of the sun's right ascension, made from April 1829 till the end of March 1831, and regular observations in declination from 1830 April 5 to 1831 March 30, except during July and August 1830. There are besides a number of observations of the moon from 11th April 1829 to 30th December 1830; but only upon fourteen of these dates are there corresponding observations in declination; and besides these there are:—

	No. of Observations.	
	R.A.	Decl.
Observations of Mercury	7	0
„ Venus	10	0
„ Mars	26	34
„ Jupiter	8	1
„ Saturn	3	0
„ Uranus	12	13
„ Comet of 1830	2	3

The cost of printing these results was defrayed by the Admiralty.

Airy's work is preceded by an interesting historical introduction, to which the writer is largely indebted for the facts connected with the life of Fallows, and from which many parts are quoted *verbatim*.

Lieutenant Meadows remained in temporary charge of the observatory from the date of his arrival at the Cape until the arrival of Henderson in April 1832.

HENDERSON (1832-1833).

Thomas Henderson, Fallows' successor at the Cape, was a man who, by his inborn genius and indomitable industry, raised himself by degrees from the position of a lawyer's apprentice to that of one of the most accomplished scientific men of his time. He was born at Dundee on the 28th of December 1798. His father was a tradesman in respectable circumstances in that city, who had died early in life, leaving his widow in care of a family of two sons and three daughters, of which Thomas was the youngest member. At the age of nine he was sent to the Grammar School of Dundee, where he followed the usual course of classical study for four years, and was generally dux of his class. In 1811 he proceeded to the Dundee Academy, where he remained for two years. That academy was then under the able rectorship of Mr Duncan, afterwards Professor of Mathematics in the University of St Andrews. The course included elementary mathematics, natural philosophy, and chemistry. Henderson passed through it with much distinction, the Rector afterwards stating that "the two Hendersons (*i.e.* Thomas and his elder brother John) were the best scholars I had in the whole period of my incumbency."

At the age of fifteen Thomas Henderson was placed in the office of Mr Small, a solicitor in Dundee, with whom his brother had entered into partnership. Whilst in this situation, he devoted his spare time to astronomy and the further cultivation of mathematics — studies for which he had shown a strong predilection during his school-days.

Having passed an apprenticeship of six years, Henderson, at the age of twenty-one, went to Edinburgh in order to complete his studies in law and obtain professional employment. He obtained a situation in the office of a Writer to the Signet, where his intelligence and ability came under the notice of Sir James Gibson-Craig, and, on his recommendation, Henderson was appointed advocate clerk to Lord Eldin, one of the Judges of the Supreme Court of Scotland. On Lord Eldin's retirement from the bench, Henderson became for some time private secretary to the Earl of Lauderdale, and afterwards secretary to the Lord Advocate (Jeffrey). In these employments Henderson passed twelve years—1819 to 1831—but apparently all his leisure was spent in pursuit of his favourite studies. His astronomical acquirements procured him introductions to Professors Leslie and Wallace, to Captain Basil Hall and

Digitized by Google

others of like tastes, and gave him access to the small observatory on the Castle Hill, belonging to the Astronomical Institution of Edinburgh. The instruments consisted of a transit instrument of 30 inches focus, a clock, and an altazimuth by Troughton. To a young astronomer who had no other access to astronomical apparatus, such an opportunity was invaluable, and it doubtless had a considerable influence on his future career.

Henderson first came into notice as an astronomer in 1824, by communicating in that year to the Board of Longitude a method of computing an observed occultation of a fixed star by the moon, of which Dr Young, then Secretary to the Board, thought so highly that he caused it to be published (under the title of an improvement on his own method) in the *Nautical Almanac* for 1827 and the six following years.

From this time onward Henderson's name became yearly better known by his contributions on miscellaneous astronomical subjects in the *Quarterly Journal of Science*, the *Philosophical Transactions* of the Royal Society, and the *Monthly Notices* and *Memoirs* of the Royal Astronomical Society.

Henderson's official duties as secretary to Lord Lauderdale and the Lord Advocate brought him for some months in every year to London, so that he thus became personally acquainted with the principal astronomers of England, and had an opportunity (particularly at Sir James South's observatory) of seeing and working with first-class instruments.

Henderson was strongly recommended for the Chair of Practical Astronomy in the University of Edinburgh, which had become vacant by the death of Dr Robert Blair in 1828. The office had hitherto been a sinecure, and the Government postponed filling up the post, pending consideration of the footing on which it should be placed with the greatest prospect of advantage to science. In the following year, by the death of Dr Young, the office of superintendent of the *Nautical Almanac* became vacant. About a fortnight before his death Dr Young had placed a memorandum in the hands of Professor Rigaud, to be opened in the event of his death. It was found to contain a request that the Admiralty should be informed that he, Dr Young, knew of no person more competent to be his successor in the superintendence of the *Nautical Almanac* than Mr Henderson. In consequence of other contemplated arrangements, however, the superintendence of the *Nautical Almanac* was committed temporarily to Mr Pond, the Astronomer Royal.

Henderson's standing was, however, now fully established, and on the death of Fallows he was regarded as the man best qualified to fill the vacant post at the Cape. The idea of leaving this country was distasteful to him. He accepted the office with some reluctance, and only in deference to the advice of his friends. The warrant of his appointment is dated in October 1831, and he reached the Cape in April 1832. Full of zeal and capacity, Henderson at once organised a system of regular observation. He placed the transit instrument in the hands of Lieutenant Meadows and devoted himself to observations with the mural circle.

During the period between 16th May 1832 and 24th May 1833, Henderson accomplished the following remarkable record of personal observation :—

Observations to determine the Latitude and Longitude of the Observatory; Observations of the Moon and Moon Culminating Stars for determining the Parallax of the Moon; Of *Mars* and Comparison Stars to determine the Parallax of that Planet, and thence that of the Sun; Of Eclipses of Jupiter's Satellites; Occultations of Fixed Stars by the Moon; A Transit of *Mercury*; Places of Encke's and Biela's Comets; and, finally, between 5000 and 6000 Observations of Declinations of Stars.

Lieutenant Meadows was hardly less industrious in his use of the transit instrument. The combined labours of these two astronomers make the epoch 1833 the most valuable one in the early history of fundamental sidereal astronomy in the Southern hemisphere.

Henderson was not, physically, a strong man, and it was impossible for the strongest to adequately fulfil the duties of his office without more assistance; he saw that the situation, as it stood, was an impossible one, and he was too honourable a man to accept the emoluments of an office without the most punctilious discharge of its duties. Accordingly, in May 1833, he resigned his post, and shortly afterwards returned to England.

In his letter of resignation, addressed to the Secretary of the Admiralty, he mentioned that not only the state of his health rendered him unable much longer to support the requisite exertions, but that the observatory itself, considered as a place of residence, laboured under so many disadvantages and required a mode of life so different from what he had been accustomed to, that he found it impracticable to remain longer. His letter proceeds as follows :—

"Perhaps I may be pardoned for taking the liberty of recommending to their Lordships' consideration the state of the observatory, which I am afraid would, in the opinion of every British subject who takes an interest in science and regards the honour of his country, be deemed not satisfactory."

Digitized by Google

He adds a detailed memorandum, pointing out the works necessary in his opinion to render the observatory a fit place of habitation, and concludes as follows:—

> After all this, it is much to be feared that it is beyond the power of Government to make the observatory an agreeable place of residence. Its situation upon the verge of an extensive sandy desert, exposed to the utmost violence of the gales which frequently blow, without the least protection from trees or other objects to shelter from the wind or sun, some miles distant from markets, shops, or the inhabitations of persons with whom those belonging to the observatory can associate, the want of good water, and the state of the bulk of the population from whom servants must be taken and other aid applied for, will always prove considerable drawbacks from the comforts of persons sent from England to do the duties of the observatory, and great obstructions to the undisturbed cultivation of the science.

Resignation was a very serious step for Henderson to take, for he had no private means beyond a pension of £100 a year, to which he had become entitled on the abolition of the office which he held as advocate clerk to Lord Eldin when the latter retired from the Supreme Court of Edinburgh.

Henderson was rather the refined observer than the pioneer; he was a man who, granted the means and appliances, knew how to turn them to the best effect and to attain to the highest precision of which his instruments were capable. But he was not the man to fight an uphill battle with neglect at home, and to compel Fate, in the shape of official indifference or incapacity, to do his bidding and raise the status and equipment of the observatory to the ideal level which he claimed for it. That required a dogged persistence and force of character of another kind.

But Henderson, by his own methods, attained results of high importance in many directions. His self-sacrifice helped to remove many of the difficulties of his successors, and he overcame the want of official assistance at the Cape by taking the observations to Edinburgh with him and reducing them there. In 1834 he was appointed Astronomer Royal for Scotland, but he continued to devote all the time that could be spared from his other duties to the reduction of the Cape observations. They were all ultimately published, and proved how successfully and faithfully Henderson had worked. He gave to the world a catalogue of the principal Southern stars of an equal accuracy with the contemporaneous work of the best observatories in the Northern hemisphere, and which will in all time be regarded as the true basis of refined sidereal astronomy in the Southern hemisphere.

His observations gave by far the most accurate determination of the moon's parallax then available; they determined the longitude of the Cape with a precision which refined modern methods, with the aid of the electric telegraph, have barely changed. Above all, Henderson was the first man to produce reliable evidence of the measurable parallax of any fixed star.

Splendid as was Henderson's effort as an observer, it is in his subsequent discussion of his observations that we find the full capacity of the man. There runs throughout the whole of that work an insight and thoroughness which bespeak the true practical astronomer. This is shown conspicuously in the arrangement of his observations with the mural circle and in his discussion of the observations with that instrument. His first care on his arrival at the Cape in April 1832 was to investigate the anomalies in the readings of the different microscopes, and his last care before leaving the Cape, in May 1833, was to repeat that investigation, and to convince himself, as Fallows had done, that the mean of the readings of the six equidistant microscopes was affected only to an insignificant extent by these anomalies.

There is from first to last in all Henderson's work that careful effort to foresee every possible origin of systematic error and to apply every possible method for its elimination which characterises the refined astronomer. He was one of the first British astronomers to derive the probable error of his observations by the theory of probabilities, and to employ the method of least squares in their discussion.

Whilst Henderson's catalogue is by far the most permanently valuable of his many contributions to astronomy, it is probable that his first discovery of the measurable parallax of any fixed star is that with which his name will be chiefly associated. The observations on which his great discovery was based were not made with this special object in view; indeed Henderson states that it was only about the termination of his residence at the Cape that he learned from Mr Johnston, then astronomer at St Helena, the fact that the bright double star α Centauri had a very large proper motion, amounting to about 3·6 seconds of arc per annum. This circumstance led him to suspect that the star might have a sensible parallax, and he states that if he had been aware of the proper motion at an earlier period "a much greater number of observations, and of such as would have been adapted for ascertaining the parallax, would have been made, so that a greater degree of probability would have attended the result." On reducing the mural circle observations made by himself, a sensible parallax was found; but, with commendable caution, he delayed publishing the result till it should be

Digitized by Google

seen whether it was confirmed by the observations of right ascension made by Lieutenant Meadows with the transit instrument, for he adds: "As Delambre has remarked, *il semble qu'on ne sera jamais bien sûr de la parallaxe des étoiles, tant que les ascensions droites ne confirmiront pas les résultats tirés du déclinaisons.*"

When Henderson had ascertained that the observations of right ascension also indicated a sensible parallax, he (on the 3rd of January 1839) communicated the results to the Royal Astronomical Society (*Mem. R.A.S.*, vol. xi. p. 61). Henderson had derived the right ascensions and declinations of α Centauri for the purpose of his investigation of its parallax "by comparisons with such of the principal standard stars as were observed on the same day." It is consequently assumed that the stars of comparison have no sensible parallax, or that the mean of their parallaxes in right ascension and declination is insensible. The mean places of the standard stars, or rather their "relative positions with regard to each other, are also assumed to be known; for the absolute places of the star, whose parallax is to be determined, are not required, but only the variations of these places."

The resulting parallaxes are found to be:—

Parallax of α_1 Centauri	$= +0''{\cdot}92$	probable error $\pm 0''{\cdot}35$ from observations in R.A.
,, ,,	$= +1''{\cdot}42$	,, ,, $\pm 0''{\cdot}19$ direct observations in Dec.
,, ,,	$= +1''{\cdot}96$	,, ,, $\pm 0''{\cdot}47$ reflex observations in Dec.
Parallax of α_2 Centauri	$= +0''{\cdot}48$	probable error $\pm 0''{\cdot}34$ from observations in R.A.
,, ,,	$= +1''{\cdot}05$	,, ,, $\pm 0''{\cdot}18$ direct observations in Dec.
,, ,,	$= +1''{\cdot}21$	,, ,, $\pm 0''{\cdot}64$ from reflex observations in Dec.

If the two stars are supposed at the same distance, then their mean parallax would be—

$+1''{\cdot}16$ probable error $\pm 0''{\cdot}11$.

Henderson concludes: "It therefore appears probable that these stars have a sensible parallax of about one second of space. It is desirable that observations should be made for the express purpose of determining the parallax with all the precision which the instruments can give. . . . I have no doubt that Mr Maclear, if he has not already resolved the question, will soon set it at rest, or confine it within narrow limits."

Few astronomers who nowadays examine the evidence which Henderson produces would be disposed to doubt its validity, yet at first it was regarded with considerable distrust. But additional evidence began to accumulate which showed that the parallaxes of some of the fixed stars were really measurable quantities. By observations with the filar micrometer on ninety-six nights, between November 1835 and August 1838, Struve found that the angular distance (about 43″) between α Lyræ and a faint comparison star changed systematically with a regular annual period, and that the maxima and minima of these distances corresponded with the seasons of the year at which these maxima and minima should occur if the brighter star was really the nearer of the two. If the parallax of the fainter star is assumed zero, Struve found for α Lyræ a parallax of $0''{\cdot}261$.

Bessel was about the same time making his classical researches with the heliometer on the parallax of 61 Cygni. This star, as is well known, is a double star (distance about 16″), with a proper motion of nearly 5″ per annum. Measures were made by him with the Königsberg heliometer between 61 Cygni and two comparison stars, of which one (a) is situated at a distance of 7′ 42″ nearly at right angles to the direction of the double star, and the other (b) at a distance of 11′ 46″ nearly in that direction. These measures independently agreed in giving a parallax of $0''{\cdot}31$.

In the year 1841 the Council of the Royal Astronomical Society awarded its gold medal to Bessel for this research, as the first decisive determination of the parallax of a fixed star.

Sir John Herschel, in his presidential address on that occasion, made the following statement of the relative claims of Struve and Bessel:—

> M. Struve's meridian observations 1819–21 seem to have made the first impression on the general problem, but too slight to authorise more than a hope that it would yield at no distant day. His micrometric measures of α Lyræ commenced more than a year earlier, and have extended altogether over a longer period than M. Bessel's of 61 Cygni. From their commencement they afford indications of parallax, and these indications, accumulating with time, have amounted to a high degree of probability, and rendered the supposition of parallax more admissible than that of instrumental or casual errors producing the same influence on the measure. On the other hand, M. Bessel's measures, commencing a year later, and continued on the whole through somewhat less time, have exhibited a compact and consistent body of evidence, drawn from two distinct systems of measures mutually supporting each other, and so steadily bearing on their object as to leave no more reasonable doubt of its truth than in the case of many things which we look upon as, humanly speaking, certain.

With regard to Henderson's observations of α Centauri, Sir John Herschel went on to say: "Mr Henderson observed these stars with great care both in right ascension and declination with the very fine transit, and (in spite

Digitized by Google

of certain grievous defects in the axis), the otherwise really good and finely divided mural circle of the Royal Observatory in that colony. Since his return to England, he has reduced these observations with a view to parallax, and the result is the apparent existence of that element to what, after what has been said, we must now call the real and conspicuous amount of a full second. Mr Main, to whom I am so largely indebted for allowing me to draw so freely on his labours, has also discussed these results, and comes to the conclusion that (as might, perhaps, be expected) the right ascension observations afford a trace, but an equivocal one, of parallax, but that in declination (I use his words)

> the law of parallax is followed remarkably well. There is scarcely an exception to the proper change of sign, according to the change of sign of the coefficients of parallax. This is quite as much as can be reasonably expected in a series of individual results obtained from any meridional instrument for observing zenith distances. We cannot expect to find the periodical function regularly exhibited by the differences. On the whole, therefore, we should say that, in addition to the claims of α Centauri on our attention with relation to its parallax, arising from its forming a binary system, its great proper motion, and its brightness, it derives now much additional importance, in this point of view, from the investigation of Mr Henderson. This we are at least entitled to assume until some distinct reason, independent of parallax, shall have been assigned for the changes in the declinations. Such I do not consider impossible, having before my eyes the results which Dr Brinkley derived, in the cases of certain stars, from the Dublin circle. For the present it must be considered that the star well deserves a rigorous examination by all the methods which the author himself has so well pointed out; and that, in the event of a parallax at all comparable with that assigned by Mr Henderson being found, he will deserve the merit of its first discovery, and the warmest thanks of astronomers, as an extender of the knowledge which we possess of our connection with the sidereal system.

"With this view of Mr Henderson's labours I fully agree, and await with highly excited interest the result of Mr Maclear's larger and complete series of observations on this star, both with the old circle and with that more perfect one with which the munificence of Government has recently supplied the observatory. Should a different eye and a different circle continue to give the same result, we must, of course, acquiesce in the conclusion; and the distinct and the entire merit of the first discovery of the parallax of a fixed star will rest indisputably with Mr Henderson. At present we should not, however, be justified in so far anticipating a decision which time alone can stamp with the seal of absolute authenticity."

One may be disposed nowadays, when in certain knowledge of the existence of the parallax of α Centauri, to question the doubts cast by Mr Main on the validity of the proof afforded by Henderson's observations. Evidently Mr Main had in mind the discordant results for stellar parallaxes derived, on the one hand, from observations by Brinkley at Dublin, and on the other hand by Pond at Greenwich; but he overlooks the fact that whilst these results were based on *absolute* positions, those of Henderson were practically strictly differential, and therefore far less liable to the possibility of systematic error. The great fact, however, remains that Henderson's discovery has been abundantly confirmed by his successors, and that the distinct and entire merit of the *first* discovery of the parallax of a fixed star therefore rests indisputably with the Cape astronomer, Henderson.

Of Henderson's subsequent life and work in Edinburgh it is out of place to write here, except to acknowledge with profound gratitude the debt we owe to his memory for the reduction, discussion, and preparation for press of his official observations at the Cape. That work was to him a labour of love, and to the Cape astronomer and to science generally it has been a priceless boon.

He died at Edinburgh of hypertrophy of the heart on the 23rd of November 1844.

MACLEAR (1833-1870).

Henderson's successor at the Cape was Mr (afterwards Sir Thomas) Maclear. He was the eldest son of James Maclear of Newtown Stewart, County Tyrone, and was born there on the 17th of March 1794. His early childhood gave promise of the talents that distinguished the future man, and his proficiency in Latin when only seven years old caused his father to wish him to enter the Church. An attempted coercion in this matter ended finally in a breach between father and son; the funds required for his education as a medical man were placed in the hands of friends, and he was dismissed to England, at the age of fifteen, to the care of his maternal uncles, Sir George and Dr T. Magrath, both eminent medical men.

He studied at Guy's and St Thomas's Hospitals, and passed his examinations in all branches of his profession with honours. Brilliant prospects were opened before him in London, but he preferred a quieter life, where he could follow with more advantage the mathematical and astronomical studies which already were becoming to him a necessity of life. He was accordingly elected house-surgeon of the Bedford Infirmary, where, in the congenial society of Admiral Smyth and others, he combined with the practice of his profession a gradually increasing study of astronomy.

Digitized by Google

In 1823 he moved to Biggleswade, where he practised his profession; and in 1825 he married Mary, third daughter of Mr Theed Pearse, for many years clerk of the peace of the county of Bedford. His astronomical pursuits daily absorbed him more and more, and he built a little observatory in his garden, in which he spent every moment he could spare from his professional work.

In 1833 he was appointed H.M. Astronomer at the Cape of Good Hope.

The following is a copy of the letter of his appointment and of the instructions issued for his guidance:—

COPY.

By the Commissioners for executing the Office of Lord High Admiral of the United Kingdom of Great Britain and Ireland, etc.

Whereas His late Majesty was graciously pleased by His Order in Council, dated the 20th of October 1820, to authorise the erection of an observatory at the Cape of Good Hope, with an establishment consisting of an astronomer, an assistant to the astronomer, and a labourer,

We, reposing full confidence in your zeal and ability, do hereby constitute and appoint you astronomer of the said observatory; willing and requiring you to execute the duties of the said office according to such instruction as you shall from time to time receive from us for your guidance herein, and, for your care and trouble in the performance of this duty, you will be allowed a salary of six hundred pounds per annum on the ordinary estimate of His Majesty's Navy.

Given under our hands this 12th day of July 1833.

(Sgd.) G. H. D. DUNDAS.
(„) M. F. F. BERKELEY.

By Command of their Lordships.

(Sgd.) JOHN BARROW.

To THOMAS MACLEAR, Esq.

COPY.

ADMIRALTY, *July 19th*, 1833.

SIR,—I am commanded by the Lords Commissioners of the Admiralty to signify their direction to you to proceed without loss of time to the Cape of Good Hope and there assume the control and direction of His Majesty's observatory from the assistant astronomer, Lieutenant William Meadows, and to take charge, immediately, of all the Instruments, books, and other stores left there at the departure of your predecessor. I am further commanded by their Lordships to convey to you the following outline of the principal duties you will have to perform.

1. The speedy completion of a general catalogue of all stars belonging to the Southern hemisphere, and the selection from among them of a convenient number of standard stars, the positions of which are to be determined with the most delicate precision.

2. The regular observation of such of the fundamental stars of the European observatories as may be visible, not only to connect the observations of the two hemispheres, but to determine the constant of refraction.

3. An uninterrupted series of observations of the sun, moon, and planets, for the improvements of the tables of their motions; but more especially at such parts of their orbits as (in conjunction with corresponding observations made in Europe) may be essential to the determination of their respective parallaxes, the position of the equinoctial points, and the obliquity of the ecliptic.

4. The transits of the moon and of those moon culminating stars which have been selected for the *Nautical Almanac* should be constantly observed both before and after the full moon, not only for the benefit of astronomers and navigators, but in order to fix the longitude of the Cape Observatory to which all meridian distances obtained in the Southern hemisphere will in future be referred.

5. The occasional phenomena of eclipses of the sun, moon, and Jupiter's satellites, the occultations of stars and planets, and the transits of Mercury, will of course be objects of your earnest attention, as well as the due observation of any comets that may be discovered for the investigation of their orbits.

6. In registering these various observations you will adhere as far as may be practicable to the mode recommended in the enclosed report made by the visitors of the Royal Observatory at Greenwich, and the duplicate originals of all your observations are to be transmitted to me every six months, together with such reductions of them as may be ready, their Lordships particularly desiring it to be understood that the complete reduction of all observations made at the observatory is an object of not less importance, and not less the duty of the astronomer and his assistant than the performance of the observations themselves.

7. Meteorological observations will form a necessary accompaniment to most of the astronomical observations above mentioned, but if likewise made at regular and judicious periods, they will prove to be a record of considerable value. Means should therefore be taken of strictly verifying the zero points of all the instruments employed from time to time.

8. It will be desirable to determine accurately the height of some principal fixed point in the observatory above the mean level of the sea, and also of some remarkable and unalterable natural station in its vicinity. For this purpose, as well as for the lunar theory, it will be necessary to deduce the mean level of the sea from an extensive and regular series of observations of the rise and fall of the tide in Table Bay, or at Robben Island, to which object the Governor will no doubt regularly contribute his assistance.

9. Magnetic observations on the variations, dip, and intensity should likewise constitute a part of the regular routine of the observatory.

10. As the former intentions of His Majesty's Government to measure an arc of the meridian near the Cape may possibly be renewed at some future opportunity, it will be expedient to collect gradually information as to the most eligible place for the measurement of a base, and for the other geodesical operations, as well as on the local facilities and general practicability of such an undertaking.

Digitized by Google

11. It being of importance that His Majesty's ships who may put in to the Cape should have the true time given to them and the rates of their chronometers corrected, you will cheerfully comply with such applications when they do not interfere with the business, or with the regulations of the observatory.

12. Their Lordships confidently rely on your zeal, your resources, and your devotion to science to attend, as far as your time and means will permit, to all other subjects which may tend to the advancement of astronomy, the improvement of navigation, and the credit of the establishment which has been committed to your guidance.

I am, Sir,

Your most obedient, humble Servant,

(Sgd.) JOHN BARROW.*

THOS. MACLEAR, Esq., Biggleswade.

Maclear reached the Cape on 5th January 1834, and took up his residence at the still desolate-looking observatory. Ten days afterwards Sir John Herschel also arrived at the Cape and installed himself, his family, and his instruments at Feldhausen, Newlands, within three miles of the Royal Observatory, and the next four years were spent in happy mutual intercourse between the astronomers, each assisting with heart and soul the labours of the other.

Sir John Herschel came to the Cape to catalogue the nebulæ of the Southern hemisphere on the same plan as that on which his father had catalogued the nebulæ of the Northern hemisphere. His expedition was a purely private one, carried out with his own instruments at his own expense, alike an act of devotion to science and a noble tribute to the memory of his father. Sir John Herschel was thus never His Majesty's astronomer at the Cape, but it was to Maclear and the Royal Observatory that Herschel appealed when he desired the exact determination of the place of a star, and he never appealed in vain.

On the other hand, one can imagine what, to a temperament like Maclear's, was the stimulus given by such society and such an example. It was the brightest and most delightful period of Maclear's life; it set a stamp on the future character of his work and the policy of his directorate, and, if possible, increased his ardour as a diligent observer. To his latest days (and only his very latest days was the writer privileged to know) he spoke of Sir John Herschel and his times, and of all the work and of all the fun they had together, with a racy enthusiasm but seldom met with in one beyond the years of middle life, and still more seldom in a man bereft of sight and on his last sickbed.

Herschel worked at Feldhausen from 1834 to 1838, and during these busy years collected a mass of observations which on his return to England he proceeded to reduce; finally, in 1847, he published a splendid volume entitled *Results of Astronomical Observations made during the Years* 1834–5–6–7–8 *at the Cape of Good Hope, being a Completion of a Telescopic Survey of the Whole Surface of the Visible Heavens—commenced in 1825.*

Its most important feature is a complete catalogue of 1707 nebulæ and star clusters observed by him in course of his telescopic sweeps, a large proportion of them being observed a number of times.

Next in importance probably is his list of 2102 double stars detected in course of the same sweeps, and a large number of micrometrical measures of some of these stars made with a seven-foot telescope. The work further contains a survey of the nubeculæ or Magellanic clouds; an invaluable series of estimates of the relative magnitudes of the principal fixed stars, by a method of sequences; an attempt to determine the distribution of stars in space and the constitution of the galaxy, by the process of gauging—that is, by counting the number of stars seen in the field of his telescope in different parts of the sky; a series of observations of Halley's comet; many observations of the satellites of Saturn and solar spots, and delineations of the forms of the most striking nebulæ and star clusters.

During his stay at the Cape, Herschel also, at the request of the Cape Government, devoted much time to the problem of education in the young colony, and, as the result of his experience, prepared the scheme of education which was adopted and has been followed almost to the present time.

To return now to Maclear and his work. Maclear brought to bear upon the difficulties which Fallows and

* These instructions are admirable, and offer the fullest scope, in the way of opportunity, to the most ambitious astronomer. The duties imposed are, in fact, identical with those then performed at the Greenwich Observatory, including as they do regular magnetic and meteorological observations; and added to these in the Cape programme are tidal observations and preparations for a geodetic survey, which form no part of the duties at Greenwich. But there is an absurd contrast between the staffs provided at the two observatories for the performance of these duties—the Greenwich staff being then more than double that at the Cape! Why it was assumed that the astronomer at the Cape should be able to do a larger amount of work than that done at Greenwich with less than half its staff is one of those questions which it is difficult to answer.

The answer seems to lie largely in the fact that the requirements of the Cape Observatory and the representations of the Cape astronomer were, and still are, not referred to a Board of Visitors, as is the case at Greenwich, but are simply dealt with at the Admiralty. Unless, therefore, the Hydrographer at the time happens to be a man with exceptional interest in astronomy and has exceptional knowledge of the needs and working of an observatory, the needs and the representations of the Cape astronomer must be, and too frequently have been, overlooked.

Digitized by Google

Henderson encountered all the energy and practical talents which distinguished him. By exchange and sale and purchase of land the observatory property was consolidated, and now consists of the compact and convenient grounds shown in the accompanying map. By the preparation of well-considered plans, and untiring persistence in urging their execution, he ultimately succeeded in getting suitable outhouses and other pressing works carried out; better communication with the main road to Cape Town was established, and a windmill was erected for the supply of water from the then unpolluted Liesbeck River. Trees were planted, earth was carted, and, as time went on, the barren hillsides were covered with verdure, fruit trees grew in the most favoured spots, and a wide belt of pine and wattle broke the force of the south-easters. Maclear grew each day more and more attached to the place which he had made habitable, and he became more and more at heart a colonist. His bright nature knew no difficulties; he was daunted by no official neglect, but returned again and again to press on the execution of any scheme which he deemed essential to the welfare of the observatory. His frank and cordial manners were peculiarly suited to win him favour wherever he went, and contributed in an extraordinary degree to forward his work.

We have dwelt on these circumstances of the first years of Maclear's life at the Cape, because a fair estimate of his work cannot be arrived at without their due consideration. In the face of Henderson's reports it required no small courage to throw up a lucrative profession and betake himself and his family to a distant colony where the conditions of life appeared so uninviting. It was no small part of his work to ameliorate these conditions and to secure to his successors at least the groundwork of refined and comfortable surroundings.

These administrative duties in no way interfered with the scientific labours of Maclear's office, for to these no man ever gave himself up with more untiring energy. From the date of his arrival the transit instrument and the mural circle were kept in constant use. Under the clear skies of the Cape it was inevitable that, with a man of such a temperament, observations would far exceed the computing powers of a small staff. The personal establishment of the observatory was much too limited to enable the astronomer to reduce and publish the great mass of observations which he accumulated; to do this would have required several assistants and an adequate staff of computers, and these Maclear had not. The wonder was, not that the observations were not reduced, but that so large a mass of work was actually done. In this respect Maclear was not fairly treated, but he did his best under the circumstances, and no man could do more—few, indeed, would have done as much. He was also carrying out, at the same time, a long series of observations on the bright star α Centauri, to test or confirm Henderson's result for the parallax of that star. It is an instance of the sanguine and energetic temperament of the man that he could, in addition to these absorbing occupations, turn his attention—not as a separate work, but as a work superadded to the labours of the observatory—to the measurement of an arc of meridian. In 1838 the first part of this work, *The Verification of La Caille's Arc of Meridian*, was commenced. The measurement of this arc and its extension were commenced in 1840, and the field work was finished in 1847. It is impossible to convey within moderate limits an adequate idea of the indomitable energy and perseverance with which this operation was carried out, of the difficulties surmounted, and of the extent and value of the work accomplished with limited means. That all this was fully recognised at the time is sufficiently testified by the fact that for this work he received the gold medal of the Royal Society of London, and the Lalande medal of the Institute of France.

In 1847 a 46-inch achromatic telescope by Dollond was mounted equatorially, and in 1849 an equatorial by Merz, of 7 inches aperture and $8\frac{1}{2}$ feet focal length, was added to the instrumental equipment of the observatory. These instruments were employed in the observation of double stars, comets, and nebulæ, and of occultations of stars by the moon. The original records show that the observations were sometimes sustained all night long, and contain frequent notes to the effect that the watch has been brought to a close by the rising sun. All comets visible in the Southern hemisphere were diligently observed by Maclear, and the results of the observations promptly published through the Royal Astronomical Society. Simultaneously with these observations, the meridian instruments were worked with redoubled energy, and during the years 1849–53 the whole of the stars in the British Association Catalogue having south declination were observed generally three times in each co-ordinate. The energy with which this series of observations was carried on is shown by the fact that in 1852 between 9000 and 10,000 observations of right ascension were made with the transit instrument; on some nights over 100 stars were observed. These observations, in form of the *Cape Catalogue for 1850*, have been published by the present writer. In 1855 the new transit circle (a facsimile of that at Greenwich) arrived, and was duly mounted with the assistance only of local masons and labourers, and observations were commenced with it at the end of the same year.

In 1859 Maclear paid a visit of a few months to England, and keenly enjoyed the seeing of old friends and making the personal acquaintance of many men who previously were only known to him by repute or

Digitized by Google

correspondence. He returned to the Cape in 1860, and in June of the same year received the honour of knighthood—a well-merited recognition of his labours in science.

After 1860 Maclear's attention was chiefly directed to the reduction of his previous observations. He reduced the valuable series made in 1835–40, which has since been revised and published by his successor, Mr E. J. Stone, as the *Cape Catalogue for 1840*. Sir Thomas also partly reduced the observations made with the new transit circle in the years 1856–60, a work also completed and published by Mr Stone, under the title *Cape Catalogue of 1860*. In addition to all this, he made a long series of observations of the moon and stars, for the purpose of determining the longitude of the observatory and the parallax of the moon.

Besides these varied astronomical labours, Maclear gave much attention to meteorological, magnetic, and tidal observations. He was successful in exciting an interest throughout the colony in meteorological observation, and was always ready to lend a helping hand to any student of science. He threw himself with heart and soul into all measures by which he could promote the well-being of the colony. He was a trustee of the South African Museum and a member of the Examining Board. He originated the Meteorological Commission, and continued during his life a member of it. For many years he assisted in the establishment of lighthouses, and was the originator of and took part in a commission on standards of weights and measures. He felt the keenest interest in sanitary matters, and in cases of emergency he lent his medical assistance. Maclear was the intimate friend of Livingstone. Their acquaintance commenced in 1850, when Livingstone came to him for assistance as to the best means of ascertaining his geographical position when on his travels. Livingstone's quickness and aptitude for the work won Maclear's heart; the men were kindred spirits, and their friendship lasted to the end. The reduction of Livingstone's observations at the observatory formed a serious item in his many occupations, but the work was a labour of love.

The year 1861 was shadowed by a sad bereavement—the death of his beloved wife. Maclear occupied himself more closely with his official duties and the various colonial matters in which he took a part until, in 1870, he retired from the observatory and took up his residence at Mowbray, about a mile from the scene of his former labours. Latterly his sight failed him, and in 1876 he became totally blind. In his declining health he was tenderly nursed by his devoted family; he kept up his interest in science and politics with unabated vigour, his daughters reading to him for hours together. He was particularly interested in all matters connected with the exploration of Africa, and the last occasion on which he left his house was to attend a meeting held in Cape Town when Stanley visited the colony. No name was better known or better loved in the colony than that of Sir Thomas Maclear. On the occasion of his last public appearance just mentioned, he was received with even greater applause than that which greeted Stanley himself.

The latter years of Maclear's directorate were embittered by what must be considered unfair demands for immediate publication of results. It cannot be denied that prompt and methodical publication of astronomical results greatly enhances their value, and it is the unquestionable duty of the director of every observatory to comply with these conditions as far as lies in his power. But Maclear had not the necessary staff. Fallows' observations had to be reduced and published after his death. Henderson devoted much time in the subsequent years of his life at Edinburgh to discussing and publishing the results of his thirteen months' observations at the Cape, and Maclear was doubtless under the impression that in some way provision would be made for the reduction of his own observations also. No such provision was made. Acting under specific instructions, which involved long absences from the observatory during many successive years on the survey, not only Maclear himself, but one observatory assistant also, was required for the field work of the survey. Thus the unreduced observations naturally remained untouched, and meanwhile, under the stimulus of his direction and example, and in compliance with his instructions, others were yearly added. Then followed urgent demands for the reduction of the observations of the survey, a work of great labour that occupied much of the time of his staff. Sir John Herschel toiled nearly all night in observing, and took to England the results of his labours for discussion and reduction. Maclear had absorbed in this school the influence of the motto of the Herschel family, *Quicquid nitet notandum*. Could such a man, under such an influence, give up the opportunities offered by the clear skies at the Cape and the instruments at his command? A thousand times no. He did the utmost that man could do to reduce and publish what must be published for the immediate needs of science; he toiled in observing and reduction as few directors of observatories ever have toiled, and waited in vain for the provision of an adequate computing force. Had he stopped observing to devote his powers exclusively to reduction, would he have been wise? We think not. At that time every astronomical observation made in the Southern hemisphere was of immense value. Maclear, with his instruments at the Cape, was the only man in the world who could supply them. He could not have done so had he used his time in reduction of observations, a work which could be done later without wasting the valuable

Digitized by Google

observing power of himself and his instruments. His observations remained capable of reduction; they have been reduced, and form a monument to his faithful stewardship.

Maclear gently breathed his last on 14th July 1879, and his remains were interred in the observatory grounds beside those of his wife, not far from the spot where Fallows is buried. The House of Assembly at Cape Town agreed to the following resolution on 17th July 1879:—"That this House desires to express its deep sense of the signal services rendered by the late Sir Thomas Maclear, Knt., F.R.S., F.R.A.S., to the general cause of astronomical and geographical science while in charge of the Royal Observatory, Cape Town, and also to the material interests of the colony in the practical application of his researches; and, furthermore, its high appreciation of his devotion for so long a period of years to the cause of South African exploration and civilisation, and that this resolution be recorded in the journals of the House." Never was a like recognition of service better earned. One only regrets that it was not made on his retirement, when it certainly would have been not less grateful to him, who had so worthily earned it, than it was to his sorrowing family.

STONE (1870-1879).

Sir Thomas Maclear's successor was Mr Edward James Stone, who, at the period of his appointment to the Cape, was Chief Assistant at the Royal Observatory, Greenwich.

Mr Stone was born in London on the 28th of February 1831. As a child his constitution was delicate; soon after entering the City of London School his health broke down and he was sent to the country for several years, where he was educated at a private school until ready to enter King's College, London.

Although his higher education only began at the age of twenty, he took a scholarship at Queen's College, Cambridge, in 1856, whence he graduated as fifth wrangler in 1859, and was immediately elected to a fellowship. The following year he was selected for the important position of Chief Assistant at the Royal Observatory, Greenwich, his predecessor in that post—the Rev. R. Main—having been appointed Radcliffe Observer at Oxford.

With what diligence he applied himself to the duties of his office, and how wide a view he took of his responsibilities, is made evident by the series of important papers which he soon afterwards began to communicate to the Royal Astronomical Society.

His work was obviously congenial; he had a marked inborn capacity for dealing with large masses of figures, a high estimate of the practical importance of the work on which he was engaged, a sound mathematical training, and an almost impatient desire to derive, from the long series of Greenwich observations, results which would be of immediate value to science.

It is not difficult to trace the origin of the line of research which Stone subsequently followed with such zeal and pertinacity. Fresh from the study of the lunar and planetary theories as far as these subjects were treated in his Cambridge curriculum, the attention of the young astronomer was early arrested by the interesting problems which were then opening up in consequence of researches of Hansen and Le Verrier.

The whole problem of the determination of the solar parallax, interwoven as it is with the motion of the perihelion of Mars, the parallactic inequality of the moon's motion, the constants of aberration and nutation, the moon's mass and parallax, etc., had a special fascination for him, and we find in the *Monthly Notices of the Royal Astronomical Society* a long series of papers from his pen bearing on these subjects.

In May 1865 he communicated to the Royal Astronomical Society an important Memoir on the "Constant of Lunar Parallax," in which he derived the value of that constant, as defined by Adams, from a series of observations of the moon made under the direction of Maclear at the Cape (1856–61), combined with corresponding observations made at Greenwich.

In the supplementary number of the *Monthly Notices* for 1868, Stone communicated to the Royal Astronomical Society his "rediscussion of the observations of the transit of Venus of 1769," in which, after quoting the evidence he had derived in favour of an increase in the previously accepted value of the solar parallax, he proceeds to re-discuss the observations made at five stations where internal contacts of Venus with the sun's limb were observed both at ingress and egress by ten observers. An independent interpretation was put upon the language employed by each observer to describe the phenomena which he noticed at different instants of time, and the assumption was made that such phenomena could be divided into two distinct classes—viz., true and apparent contacts—separated by a definite interval of time. This interval (assumed to be constant for all observers) he introduced in symbolic form into all the equations, and their solutions led to the value of

$8''{\cdot}91$ for the solar parallax.

Digitized by Google

Although it is now certain that this value is nearly *one per cent.* too great and that the representation of the observations (within a little more than a second of time for each station) conveys an impression of accuracy far higher than that which we now know to be obtainable, it is but justice to Stone's memory to quote the opinion held at the time by astronomers of his own country in regard to this work.

In February 1869, on presenting the gold medal of the Royal Astronomical Society to Mr Stone for his "Rediscussion of the observations of the transit of Venus in 1769 and his other contributions to astronomy," the President, Admiral Manners, said :—

> By this important investigation, Mr Stone has earned for himself the gratitude of astronomers of all countries. He has shown, beyond all doubt, that the method pursued by his illustrious countryman, Halley, when fairly treated, is capable of furnishing a value of the solar parallax commensurate in precision with the expectations formed of it.
>
> But this is not all. Mr Stone, by his researches in this instance, has wiped from astronomy a reproach which did not indeed legitimately attach to it, but which only one of those intellectual triumphs which from time to time have adorned the annals of our science was capable of extirpating.

It may be interesting at this point to refer to a later paper of Stone's on the same subject. When the *Parliamentary Report on the Telescopic Observations of the Transit of Venus of* 1874 *made in the Expeditions of the British Government* reached the Cape, Stone immediately recast the observed phases, recomputed the results, and, by return mail, communicated (March 1878) to the Royal Astronomical Society the results of his rediscussion, which gave, instead of the official result (8″·76), the value 8″·89 for the solar parallax—a value in close agreement with that which he had derived from the observations of the transit of 1769. He followed up this communication by a further paper, published in the next number of the *Monthly Notices*, in which he included a discussion of the Cape observations and arrived at a very similar conclusion.

Our reason for referring to these results, which to a large extent lay outside the history of the Cape Observatory, is to show that observations which are capable of a variety of interpretations are unfit for the determination of astronomical constants. No one can question Stone's good faith in the interpretation he put upon the language of the observers; but the results show how a preconceived idea as to what the result should be unconsciously affects the interpretation put upon an observer's words. It was this conviction, strongly confirmed by these discordant interpretations, which largely influenced the policy of the Cape Observatory in subsequent researches.

Throughout his whole life, one of Stone's most characteristic qualities was his high sense of responsibility and strict regard to official duty. However absorbing may have been the independent researches in which he was engaged, his official duties were at all times his first consideration. These occupied not only his official hours at the observatory, but he gave to them and to strictly allied work much of the labour of his private time.

In the Greenwich Catalogue for 1850, Airy employed the very unsatisfactory proper motions of the British Association Catalogue of Stars. For the formation of the 1860 Catalogue the proper motions determined by Main were available. Recognising the importance of Main's work, Stone continued it, and, in the *Memoirs of the R.A.S.*, 1864, vol. xxxiii., gave proper motions for 450 stars of the Seven-Year Catalogue, computed by reducing Bradley's observations (as given in Bessel's *Fundamenta*) to the equinox of 1860, and comparing the results with the corresponding places of the 1860 Catalogue.

A further proof of Stone's deep interest in his official duties is given in the paper "On the Accuracy of the Fundamental Right Ascensions of the Greenwich Seven-Year Catalogue for 1860," published in vol. xxxiv. of the *Memoirs of the R.A.S.*, where he specially discusses the accuracy of the fundamental right ascensions of α Pegasi, α Geminorum, α Virginis, and α Aquilæ.

In November 1867 Stone communicated to the Royal Astronomical Society a paper "On Bessel's Mean Refractions," in which he showed that the tabular refractions of Bessel's *Fundamenta* were too great, and required to be diminished by one five-hundredth part, in order to represent the Greenwich observations of circumpolar stars made in the year 1857–65. This important conclusion has since been supported by Comstock in his determination at the Washburn Observatory of the constant of aberration, and also by Gill's discussion of the Cape and Greenwich observations. Nyren's discussion of the Pulkowa refractions also points in the same direction.

Besides the already mentioned important papers connected with well-marked lines of continuous research, we find no less than twenty notes of a more miscellaneous character communicated by Stone to the Royal Astronomical Society. These papers testify to the wide interest which he took in all contemporary astronomical research during the ten years he remained Chief Assistant at Greenwich.

In the early part of 1870 Sir Thomas Maclear resigned his post as Her Majesty's Astronomer at the Cape, and in June of the same year Stone was appointed his successor.

Stone had for a long time recognised the special importance of forming an accurate and extensive catalogue

Digitized by Google

of Southern stars, and had even endeavoured to persuade Airy to extend the range of magnitude of stars observed at Greenwich, and to construct a catalogue of Northern stars complete to some such order of magnitude as the 7th. In his Introduction to the *Cape Observations of 1871, 1872 and 1873*, Stone states: "The chief inducement which led me to accept the appointment was the opportunity which the position afforded for the formation of a general catalogue of Southern stars to about the 7th magnitude." It was therefore with enthusiasm and high resolve to construct such a catalogue that Stone betook himself to the Cape. But his official instructions were imperative on one point, viz., that he was to render the large number of meridian observations accumulated by Maclear available for the use of astronomers with as little delay as possible.

Such an instruction was one which would have discouraged most men.

> I found myself (said Stone), with a very limited staff, unexpectedly confronted with the result of thirty-six years of miscellaneous observing in all states of reduction, nothing completed, and nothing which could be brought forward for publication and use without a very considerable expenditure of time and skilled labour. I fear the course pursued of continuous miscellaneous observing without reduction has not tended to the advancement of accurate astronomy to any extent proportional to the labour expended upon it, before the results can be rendered useful. Such observing is rarely conducted in a way to facilitate the subsequent reductions or to economise labour in observing. This will be apparent to anyone who will count the number of observations of stars between 67° and 117° north polar distance, and consider that a catalogue formed from the result of other years would contain observations of these stars to very nearly the same relative extent. Of the large number of observations accumulated here from 1832 to 1855 with the transit instrument and mural circles, the places of the Southern stars, out of reach of Northern observatories, will, when reduced, still be of value for proper motions, but the immense number of observations of well-known stars made here with the old instruments can now, I fear, never repay the labour required for their reduction. . . . I have made these remarks not only in justice to the present staff, and to explain the work upon which they have been employed, but because it was these considerations which led me to pass over the earlier observations, and to commence the systematic reductions with the year 1856, when the transit circle was first brought into regular use. I felt that these reductions could not be any longer delayed without the value of the results being greatly diminished. I had, and still have, hopes that the data collected in the present catalogue for corresponding observations at the northern observatories could be found sufficient to meet the actual requirements of astronomers so far as these requirements can be met by the material collected here, and that I might be relieved from the laborious and somewhat useless task of completing the reductions of the earlier observations of stars whose positions have been fixed already with an accuracy greater than could be expected to be attained in the observations made with the, comparatively speaking, inferior instruments in use at this observatory before the introduction of the transit circle.

This point has been dwelt upon at some length, because inquiry has shown that these words convey precisely Stone's frequently expressed views, and we can thus more fully admire the high sense of duty which prompted the self-sacrifice and devotion with which he applied himself to the subsequent execution of an uncongenial but honourable task.

The meridian results for the year 1856 were published by Stone in 1871; for the years 1857 and 1858 in 1872; and those for 1859 and 1860 in 1874. The General Catalogue of 1159 Stars, derived from all these observations and reduced to the equinox of 1860, was published in the year 1873.

In the interval of his regular labours Stone next devoted his attention to the examination and publication of the results of observations made with the transit instrument and mural circle in the years 1834 to 1840. Maclear had already reduced the whole of these observations, and Stone accepted these results generally as satisfactory, but he redetermined the azimuthal errors and re-reduced the observations of the close circumpolar stars. The work of examination occupied Stone from time to time as opportunity afforded, and "much progress was made in it during the comparative leisure enjoyed during my visit to England in 1875." The results were finally published by Stone in 1878, in the form of the *Cape Catalogue of 2892 Stars reduced to the Equinox 1840.*

But Stone did not allow these labours to interfere with his main object. Within a month of his arrival at the Cape a working list of stars within 5° of the South Pole had been prepared, and observations with the transit circle were commenced. The work was prosecuted with systematic vigour notwithstanding the loss of two assistants—Mr Sinfield, who died in September 1871, and Mr Mann, his chief assistant, who, after a year's illness, died in April 1873. Although there was considerable delay in replacing these valued assistants, Stone was able in 1876 to publish the annual results of the Cape observations in 1871, 1872, and 1873, containing accurate places of all La Caille's stars within 15° of the South Pole, and of nearly all the stars to the 7th magnitude within the same zone. At the same time he was able to announce that the similar stars within 35° of the South Pole had already, in December 1875, been observed, and arrangements made for the observation of the next zone, 135° to 145° N.P.D., in the year 1876; that, in the year 1877, the work, if persevered with, should overlap that of some of the northern observatories, and with the zone 115° to 125° N.P.D., it might perhaps be brought to a close in 1878. This programme was fulfilled to the letter, and the observations of the zones were completed in the end of 1878.

Meanwhile a large stereographic projection of the Southern hemisphere had been prepared, and upon it

Digitized by Google

were projected the places of all the stars which had already been observed, and wherever lacunæ appeared within the limits of N.P.D. 115° to 180°, efforts were made during the first four months of 1879 to fill them up by observing stars of rather a lower magnitude than the 7th of La Caille's scale. During the same period also such control observations as seemed necessary were taken, and the whole work of observation was completed.

The reductions had been rigorously kept up to date, and before the end of May 1879 the whole of the star places had been reduced to the equinox of 1880, the means taken, and the precessions and secular variations computed.

The Rev. Robert Main, Radcliffe Observer at Oxford, died on the 9th of May 1878. Stone, having nearly fulfilled the object for which he came to the Cape, became a candidate for the post, and was soon afterwards elected to it. The Radcliffe Trustees yielded to the request that Stone might be allowed a year to complete his work at the Cape, and the Rev. Charles Pritchard, then Savilian Professor of Astronomy at Oxford, was appointed interim director. On the 27th of May 1879, Stone sailed from the Cape, taking with him all the documents necessary for the preparation of his great Southern catalogue for press.

At Oxford, Stone applied himself to this work with such energy that in 1881 the Cape Catalogue of 12,441 Stars for the Equinox 1880 was passed through the press, and its publication was welcomed by astronomers as one of the most important contributions ever made to sidereal astronomy. His personal welcome amongst his colleagues was no less cordial. He was at once elected a Vice-President of the Royal Astronomical Society, and on the vacation of the presidency by Mr Hind, Stone was elected to the chair.

We must now briefly review Stone's other labours during his stay at the Cape. In 1871 he published an experimental determination of the velocity of sound, based on chronographic determinations of the interval which elapsed between the flash of the Cape Town time-gun and the instant when the noise of the report reached the Cape Observatory. Various papers on the theory of probabilities, including a criterion for the rejection of discordant observations, also appear from Stone's hand during this period, and there are sundry papers in the *Monthly Notices* on proper motions of stars, observations of comets and variable stars, etc., which testify to his continued interest in general astronomy, notwithstanding his preoccupation in the great work of his catalogue.

In 1874 he undertook an expedition to Klipfontein, in Namaqualand, and successfully observed the solar eclipse there on the 16th of April of that year. He employed a slit spectroscope with two dense flint prisms of 60°, and was successful in observing the reversal of the Fraunhofer lines at the instant of disappearance of the sun's limb. On the same expedition he made a valuable series of magnetic observations in Namaqualand, the first series of its kind in that region.

In 1877 (*Appendix to the Cape Observations for 1874*) he published a set of star-constant tables for computing the apparent places of stars from their mean places, or *vice versa*. These tables have been largely used, first at the Cape, and subsequently at Greenwich and other observatories.

Such, in brief, is the record of Stone's labours at the Cape. But for the simultaneous and almost phenomenal labours of Gould at Cordoba it might be said of Stone that he created our knowledge of the exact sidereal astronomy of the Southern hemisphere.

Under Stone's directorate no additions were made to the instrumental equipment, to the buildings, or to the amenities of the observatory and its surroundings.

Unlike Maclear and Gould, Stone was not a great observer. At Greenwich he personally made about $2\frac{1}{2}$ per cent. of the observations secured there during the period 1860 to 1869; at the Cape and Oxford he made very few of the observations, but he closely supervised his assistants, and laboured early and late at every detail of reduction and examination. Trained in the systematic and rigid school of Airy, and gifted with remarkable powers of speed, accuracy, and endurance in computation, he was enabled to carry out, with a very small staff, the great record of work which he produced. He made the chief part of Maclear's meridian observations available for science, and created his two great catalogues—the Cape Catalogue of 12,441 Stars for 1880, and the Radcliffe Catalogue of 6424 Stars for 1890. By these works his name will be chiefly remembered.

After a short and painless illness, Stone died suddenly at the Radcliffe Observatory on the 9th of May 1897—the nineteenth anniversary of the death of Main, his predecessor.

Stone was a Fellow of Queens' College, Cambridge. In 1868 he was elected a Fellow of the Royal Society; and, as already stated, was in 1869 awarded the gold medal of the Royal Astronomical Society. He was a corresponding member of the Société Nationale des Sciences Naturelles, Cherbourg, and honorary member of the Literary and Philosophical Society of Manchester. In 1881 he received the Lalande medal of the Paris Academy of Sciences for his Cape Catalogue. In 1892 the University of Padua conferred upon him the honorary degree of Doctor of Natural Philosophy; and from March 1883 he was a member of the Meteorological Council, London.

Digitized by Google

Any history of the directorates of Maclear and Stone would be incomplete without mention of their chief assistants, Charles Piazzi Smyth and William Mann.

CHARLES PIAZZI SMYTH.

Piazzi Smyth was the second son of Admiral William Henry Smyth, the hydrographer, antiquarian, and astronomer (best known to astronomers as author of the *Celestial Cycle*), and was born at Naples on the 3rd of January 1819. At Palermo Admiral Smyth made the acquaintance of the venerable astronomer, Giuseppe Piazzi. Their mutual tastes led to such intimacy and friendship that the child was named after the celebrated astronomer, who acted as godfather at the christening and expressed the desire that his young namesake might become an astronomer. When the boy was about eleven years old his father, who had settled at Bedford, bought what was then considered a powerful telescope, erected the well-known Bedford Observatory, and devoted himself to inspiring his son with his own enthusiasm for astronomy.

Piazzi Smyth attended the Grammar School, Bedford, from the age of ten to sixteen, and then went to the Cape as assistant to Maclear. The fact that he was able at once to assist so effectively in observing Halley's Comet (*Mem. R.A.S.*, vol. x.) shows how fully he had profited by his home training in astronomy and astronomical drawing. In 1843 he made a series of observations of the great comet of that year, extending from 5th March to 19th April, with $3\frac{1}{2}$-inch portable telescope, which seems to have been the largest instrument then available at the Cape for extra-meridional observations. He also depicted in oils the appearance of the great comet as seen in the late evening twilight, with its slender and somewhat plumed tail stretching far up into the sky.

Besides sharing the routine work of the observatory, he took a particularly active part in the verification and extension of La Caille's arc of meridian, which had been preceded by a triangulation connecting La Caille's Observatory, the Royal Observatory, and the site of Sir John Herschel's large reflecting telescope. He also shared in the measurement of the Zwartland Base, which lasted from 30th October 1840 until 5th April 1841, and which required the co-operation of no less than twenty-six persons. In the triangulation Piazzi Smyth seems to have had a full share of work at the loftier stations, including Kamies-Sector Berg, 5141 feet high. Winter Berg, 6818 feet, occupied from 9th July to 10th October 1844, mentioned by Maclear as "a difficult snow-capped mountain in the winter season"; and, lastly, Sneeuw Kop, 5211 feet, occupied from 22nd November 1844 to 21st July 1845.

Piazzi Smyth then returned to the observatory, preparatory to leaving the Cape for Edinburgh, where he had been appointed successor to Henderson as Astronomer Royal for Scotland and Professor of Practical Astronomy in the University of Edinburgh. But he delayed his departure for a time in order to facilitate the extension of the triangulation to Cape Agulhas, and did not sail for England until 22nd October 1845. He carried with him the best wishes of Maclear, who speaks of him as "experienced in the details of meridian work, unflinching in hardships," and adds that "he had a happy talent, with the assistance of his pencil, in conciliating the inhabitants, . . . and his robust constitution fitted him for taking an active share in the triangulation."

His life and work in Edinburgh as Astronomer Royal for Scotland and Professor of Practical Astronomy in the University of Edinburgh do not relate to the history of the Cape Observatory. But the writer may perhaps here be allowed to record the fact that Piazzi Smyth was the first astronomer whom he was privileged to know. The acquaintance, begun in 1863, powerfully influenced the writer's life (as will afterwards be told), and it soon ripened into a friendship that continued until Piazzi Smyth's death on the 21st of February 1900.

WILLIAM MANN.

William Mann, for thirty-two years a member of the staff of the Cape Observatory, was the third son of Major-General Cornelius Mann, R.E. He was born at Lewisham in Kent on the 24th of October 1817. He was educated at home under private tutors until thirteen years of age, when, his father having been appointed Commanding Royal Engineer at Gibraltar, he accompanied him there. At Gibraltar he continued his studies in the hope of entering the Royal Military Academy at Woolwich. The regulations, however, seem to have prevented this, in consequence of his having an elder brother already in the Academy, and he had to turn his attention to some other pursuit. Through the recommendation of Admiral Shirreff he was ultimately appointed Second Assistant at the Cape Observatory. He visited England in 1837 to complete his preparations for the appointment, and joined the staff of the Royal Observatory at the Cape in October 1839, being then twenty-two years of age.

Mr Mann took with him to the Cape various instruments and forms of apparatus that had been prepared for remeasuring La Caille's arc of the meridian. During the first six years of his service he was chiefly employed in

Digitized by Google

operations connected with this work, under Maclear. While working upon the verification and extension of La Caille's arc he was often exposed for months at a time in the wild country of the Clanwilliam district, lying between 200 and 300 miles north of the Cape, occasionally being three months without other shelter at night than the open sky. The kind of life he had to lead at this time is very graphically told in a brief extract from one of his letters, in which he describes how he established the station some seventy miles beyond the Sneeuw Kop peak of the Cedar Mountains. A mountain had been seen over the broken Karroo country from the Sneeuw Kop, in a north-eastern direction, which seemed likely to answer for a connected station; but the intervening tract of land was so difficult, and the means of transport so utterly insufficient, that it was out of all question to attempt to send a party of men to the place to establish the signal. Mr Mann, therefore, volunteered to make his way to the mountain, and to conduct the signals by himself. He accordingly started, with only one Hottentot attendant, a bag of rusks, and a map of the country. After three days' wandering through the wildest and most desolate territory, entirely destitute of water, he came providentially upon a small stream late one evening, and slept on a bare rock near the base of the desired mountain. His narrative of his further proceedings is then continued in the following words:—

> Next morning I called a council of war, consisting of myself, to debate on what was to be done. I found there was bamboo enough to last the horses two days, and we two mortals might possibly exist that period upon the quantity of bread which remained; and as the time was precious in our operations, and, if I left our present position, I did not know how long we might be wandering about before we came to a house, I determined to make this my headquarters. So, leaving my servant in charge of the horses, I prepared to ascend the mountain for the purpose of making the necessary signals. I took with me two rusks, all that could be spared, which were to last me as many days, and as much water as my pocket pistol could hold, which was about one draught. I had about 2000 feet of mountain to climb, and a heavy load to carry; and, taking into account the heat of the weather and the want of a breakfast, I was *rather* tired when I at last arrived at the top. I soon established my signal, and sat all the rest of the day reading it. I was obliged to fill my mouth with pebbles to keep it moist. Night came on, and, hungry and thirsty, I laid myself down to sleep. There was not a stone or a bush on the top to afford the least shelter; it blew a gale of wind, and the night was as cold as the day had been hot. Next morning at sunrise I was again signalling away, and about noon, to my great joy, I saw the signal from the Sneeuw Kop station for me to leave. I was not long in packing up my traps and getting down the mountain. I found my servant with the horses looking very miserable, but cheered the former with the news that I had discovered with my telescope a farmhouse a few hours off.

He then goes on to tell how he made for the house, but, alas! only to find it a ruined and deserted homestead. He finally reached the Sneeuw Kop station, after three more days of painful travel. This little incident is worthy of extract, as illustrating in a forcible way what measuring an arc of meridian in the wilds of South Africa means. It is not surprising that even a naturally vigorous and good constitution felt the strain of such work and exposure as this. In the year 1846 Mr Mann had to visit England for the restoration of his impaired health; and Mr Maclear wrote upon that occasion:—

> I feel the loss of Mr Mann's services, especially at the present juncture. His powerful intellect, his unflinching integrity, and his industry enable me to trust him with confidence on all occasions and in every department, whether at the observatory or on the triangulation, being certain that whatever is practicable he will accomplish, and that what he does will be sure to be well done.

On his return to the Cape in 1847, in the capacity of Chief Assistant, he was constantly employed on the current work of the observatory both in observation and computation, especially in the reduction of the field work of the arc of meridian.

In 1852 he was commissioned to proceed to England in order to make himself acquainted with the mechanical details of the new transit circle, and to be instructed in the methods for mounting it at the Cape. He returned with the new instrument in charge, and proceeded to erect it at the Cape. This was a work of no small difficulty and responsibility, because no skilled workman of the kind required, excepting masons and native labourers, were at that time to be found at the Cape. The work involved the alteration of the eastern pier, the erection of a new western pier, the enlargement of the old mural room towards the south, and the erection of piers to support the collimators. Fortunately, Mann had a mechanical turn of mind, and was himself unusually skilful in the use of tools, otherwise the work would have had to stand over until skilled artisans had been sent out from England. As it was, the whole was carried out in a most satisfactory manner, and regular observing was begun before the end of 1854.

The instrument is practically a model of Airy's transit circle at Greenwich, with the exception that the cube is perforated to allow free passage of a cylinder of rays of 4 inches diameter (*i.e.* of the aperture of the collimators) when the telescope is directed to the nadir or zenith, so that the collimators can mutually view each other whilst the instrument rests on its pivots.

The pivots rest on segmental bearings, like those of the Greenwich instrument, which are simply bolted down upon planed iron surfaces without any fine screw adjustment in azimuth or level. Final adjustment in azimuth

Digitized by Google

could be accomplished by tapping the holders of the bearings, the holes of the holding-down bolts being widened to allow of some movement. But no adjustment is possible in level except by filing or scraping the under surface of the support of the bearings, or by introducing the layer of tinfoil or thin paper between the surfaces. Mr Mann had taken great pains to adjust the iron plates which bolted to the two piers, so that their upper surfaces should be in the same horizontal plane. He then placed the iron supports of the pivot bearings on these planes and lowered the instrument upon its bearings. Having then set the middle wire to geometrical collimation, he turned it to the nadir in order to measure the error of level. He was aghast to find that he could perceive no reflex image of the wires in the field of view, and it was not for some little time that he found, to his infinite delight, that the reflex and direct images were in exact coincidence—in fact, so perfectly had all his preliminary work been done, that no further adjustment was required.

In the year 1853 Mr Mann married Caroline, second daughter of Mr (afterwards Sir Thomas) Maclear, H.M. Astronomer, and thus, as a member of the family of his chief, became more closely identified with the Cape establishment.

In the year 1859, during Maclear's absence in England, Mann became acting astronomer for nine months, and devoted his time largely to the outstanding computations connected with the arc of meridian, a work which he ultimately carried to completion.

About this time he was also much occupied with the observation of comets—a kind of work which had always a great attraction for him; but the long watches and exposure it involved brought about the first attack of a disorder of the chest to which he ultimately succumbed.

In 1866 he made a short visit to Natal in the hope of relief from the severe suffering which asthma had brought upon him, and in 1867 he extended his trip to England for further rest and change. At the end of six months he returned to the Cape, considerably improved in health, and then entered upon the reduction of the Cape meridian observations of past years. He continued his observations of comets, and planned an extension of Argelander's zones in the Southern hemisphere, a work which he actually began, but which his declining health prevented him from continuing. Until 1870, although unquestionably suffering from impaired powers, he was unremitting in his application to the work of the observatory.

At the same time he had to face a great personal disappointment. Sir Thomas Maclear resigned the office of H.M. Astronomer, and Mann had naturally looked forward to succeeding to the post. Had he been in full health there is little doubt that his long and able service would have been a strong claim to the gratification of his legitimate ambition. As matters stood it could not be, and Mr Stone was appointed to the post. Not long after this an outbreak of scarlet fever occurred in the neighbourhood of Cape Town and visited the Royal Observatory. Two of Mr Mann's children died of the disease, and he himself suffered so severely that his life was for some time in jeopardy. Under the devoted care of his family and friends he survived the attack, but was so broken down by it that he found it impossible to resume his work and resigned his appointment, retiring with a small pension for his past services. At the end of 1872 he was further reduced by bronchial disease, and on the 30th of April 1873, he sank quietly to his rest.

Shortly before his death Her Majesty, Queen Victoria, was pleased to grant him a small pension from the Civil List in recognition of his good service, but he was himself never aware of this gracious act. Mr Gladstone very considerately ordered the payment of a sum equal to three years of this pension to Mrs Mann.

. . . . . .

The writer of these notes succeeded Mr Stone as H.M. Astronomer at the Cape of Good Hope. He has found it difficult, if not impossible, to write an autobiography in the third person, and therefore from this point the form of personal narrative is adopted, so far as his autobiography is concerned.

GILL.

On the 19th of February 1879 I had the honour of being appointed H.M. Astronomer at the Cape in succession to Mr E. J. Stone.

The eldest surviving son of David Gill of Blairythan, Aberdeenshire, I was born at Aberdeen on the 12th of June 1843, and attended the Bellevue Academy in that city till about the age of fourteen, when I went to Dollar Academy and came under the inspiring influence of Dr Lindsay, at whose house I boarded. His teaching filled me with the love of mathematics, physics, and chemistry.

From Dollar I proceeded to Marischal College and University, Aberdeen, where I was a student under the celebrated Clerk Maxwell, and his teaching influenced the whole of my future life. My father had married late in

Digitized by Google

life, for at the time I was twenty years of age he was seventy-four years old. He was a successful merchant in Aberdeen, as had been his father before him, and he not unnaturally wished me to succeed him in business. I very unwillingly yielded, and, after some years, my father retired, leaving his business in my hands. My heart and my thoughts, however, had always been set upon things scientific. From the time that I entered college I had a little laboratory in my father's house where I made chemical experiments, and, later, under Clerk Maxwell's influence, carried out preliminary essays on the determination of physical constants.

In those days there was no working physical laboratory in Aberdeen accessible to students, but simply an apparatus-room containing the old-fashioned lecture-models of levers, pulleys, pumps, windmills, steam engines, etc., with some balances, air-pumps, tuning forks, an Atwood's machine, electric machines, a few galvanic batteries, etc., in glass cases; but access to this room was forbidden to students. After the lectures, however, Clerk Maxwell used to remain in the lecture-room for hours, with some three or four of us who desired to ask questions or discuss any points suggested by himself or by ourselves, and would show us models of apparatus he had contrived and was experimenting with at the time, such as his precessional top, colour box, etc. These were hours of purest delight to me. Maxwell's lectures were, as a rule, most carefully arranged and written out,—practically in a form fit for printing—and we were allowed to copy them. In lecturing he would begin reading his manuscript, but at the end of five minutes or so he would stop, remarking, "Perhaps I might explain this," and then he would run off after some idea which had just flashed upon his mind, thinking aloud as he covered the blackboard with figures and symbols, and generally outrunning the comprehension of the best of us. Then he would return to his manuscript, but by this time the lecture hour was nearly over and the remainder of the subject was dropped or carried over to another day. Perhaps there were a few experimental illustrations—and they very often failed—and to many it seemed that Clerk Maxwell was not a very good professor. But to those who could catch a few of the sparks that flashed as he thought aloud at the blackboard in lecture, or when he twinkled with wit and suggestion in after-lecture conversation, Maxwell was supreme as an inspiration. The less imaginative side of instruction in mathematics and physics was admirably supplied by the extra-mural teaching of Dr David Rennet.

In the year 1863 it occurred to me that Aberdeen was very much in need of a standard of accurate time. Some years before that date Piazzi Smyth had instituted a time-gun at Edinburgh, and the signal was found to be a very useful one. Professor David Thomson, then, and till his death, Professor of Natural Philosophy at King's College, Aberdeen, kindly gave me a letter of introduction to Professor Piazzi Smyth, and I went to Edinburgh to make inquiry as to the methods employed for firing the gun there. This was my first introduction to an astronomer and an observatory. I was received with every possible kindness, and shown every detail not only of the time-gun and time-ball arrangements, but of all the instruments at the observatory.

Clerk Maxwell had given us a few lectures on practical astronomy, in one of which he exhibited a model of a transit instrument (made out of tin-plate and mounted on wooden piers). But he had given us such a clear and interesting account of its purposes, adjustment, and methods of use, that although I had never before seen a real astronomical instrument, I had no difficulty in recognising the functions of every detail of the transit instrument and mural circle then mounted in the old Royal Observatory on the Calton Hill. From that moment I took a new interest in astronomy, and, on my return to Aberdeen, told Professor Thomson that I thought we ought to determine our own time in Aberdeen. Professor Thomson said, "Why not?" There had long been what was called "an observatory" at King's College, Old Aberdeen, and there were strong solid masonry piers. On one of these piers, under one of the two small domes, a portable transit instrument had been at one time mounted, but it had for many years been dismounted and kept in its cases. This we unearthed, mounted, and adjusted. My acquaintance with Professor Thomson, which had begun shortly before he introduced me to Piazzi Smyth, soon ripened into close friendship. Every clear evening I used to find my way to his house in Old Aberdeen, whence we adjourned to the observatory and worked with the transit instrument. There was a good sidereal clock, and we added a mean time clock fitted with arrangements for changing its rate by known considerable amounts, or by small known quantities, so that it could without difficulty be set or be kept within a small portion of a second of true Greenwich time. This clock I also fitted with contact-springs, so that it could send electric currents, reversed at each alternate second, to control other clocks in sympathy with the observatory standard. A Bain's pendulum was procured from Messrs Jas. Ritchie and Son of Edinburgh, and applied to the turret clock of the College, which was thus controlled to show Greenwich mean time, and at least one other clock in Aberdeen was afterwards similarly controlled.

After we had reduced these services to a matter of simple routine, we began to seek for a wider field of activity. I was very anxious to secure for the observatory an equatorial telescope by T. Cooke and Sons of York, which had been made for India, but which, on account of the death of Captain Jacob, by whom it had been ordered, was then

Digitized by Google

offered for sale on advantageous terms. There was a small fund which had been left by someone for observatory purposes, and the interest and capital together had accumulated sufficiently to provide for the purchase of this instrument; but the existing domes were too small, and there was no site belonging to the University suitable for the erection of an observatory. Professor Thomson therefore bought a small equatorial by Dallmeyer of $3\frac{1}{2}$ inches aperture and 4 feet focus, which was for sale at the time. This we mounted under the other dome, and made attempts to measure double stars, etc. The object-glass was exceedingly good, but the mounting was too feeble, the clockwork and slow motions too unsatisfactory to allow of good work. After ineffectual trials for some months to make good micrometric observations of double stars, I determined to endeavour to get a telescope of my own. An advertisement appeared in the *Astronomical Register*, in which the Rev. Henry Cooper Key, of Stretton Rectory, Hereford, offered for sale a telescope with a silver-on-glass speculum of 12 inches aperture and 10 feet focus. This he sent to me for trial on a rough wooden stand. I found it gave admirable definition, and purchased it.

The next step was to mount it equatorially, and I finally designed a double polar axis, consisting of a strong frame made in a single iron casting. Into this frame was inserted an upper cylindrical pivot resting on rollers and a hemispherical ended lower pivot resting on a hollow hemispherical bearing. The tube was clamped in a central flanged cast-iron cylinder. The pivots of this cylinder, which formed the declination axis, were cast along with this central part of the tube, and were truly turned, having axes strictly at right angles to the flanges of the central part of the tube. These pivots were mounted in bearings attached to the opposite inner surfaces of the double polar axis, and the bearings were so constructed as to bind the two sides of the frame together, so that the flexure of the polar axis, under the weight of the telescope, became nearly the same at the 6-hour angle as in the meridian. These parts of the instrument were excellently made, to my working drawings, at the workshops of Messrs Hall, Russell and Co., Shipbuilders in Aberdeen. The driving circle, its tangent screw and slow motion in R.A., as well as the declination circle, were made for me by Messrs T. Cooke and Sons of Buckingham Works, York. Slow motion in declination was given by a tangent screw working in teeth cut on the edge of the declination circle. The driving clock was made with my own hands, and consisted of a train of wheels driving a conical pendulum suspended by two pairs of springs, at right angles to each other, on the same general plan as that of Airy's chronograph at Greenwich. A cylindrical pin, projecting from the lower end of the pendulum-bob, fitted easily in a slot cut in an arm of brass, and the latter was attached to the projecting vertical pivot of the train of wheels of the clock-train, and thus communicated circular motion to the bob of the pendulum. The radius of motion was limited by a sliding pin, against the end of which the pin of the pendulum-bob pressed when the desired extent of motion had been reached. At the further end of this sliding pin was an india-rubber finger, which was thus pressed against the inner surface of a brass ring concentric with the axis of the brass arm. This set up friction on the ring, which effectually checked an increase of the arc and prevented acceleration of the period of the pendulum. The whole formed as satisfactory a driving clock as I have ever known. The pendulum had a wooden rod, and was approximately of the length of an ordinary seconds pendulum, so that its period of revolution was two sidereal seconds.*

I employed the instrument in measuring double stars, examining nebulæ, making photographs of the moon, and generally in satisfying my curiosity as to the wonders of the heavens, and I had just begun to plan attempts to determine the parallaxes of some stars with a micrometer by Steinheil of Munich, when I received a visit from Lord Lindsay (now the Earl of Crawford). He was then considering the question of creating an observatory at his father's seat, Dun Echt, about thirteen miles from Aberdeen. He had seen some of my photographs of the moon, and desired to examine the means I employed for the purpose. Our acquaintance rapidly ripened, and he became aware of my desire to devote my time exclusively to science. One fine day in 1872 I received a letter from his father, the Earl of Crawford and Balcarres, offering me charge of the observatory which his son was about to erect at Dun Echt.

I had married in July 1870 and settled down in Aberdeen near the site of my observatory, working at business all day, and devoting all my spare time at night to astronomy. To accept Lord Crawford's kind and generous offer was a heavy pecuniary loss, but a gain so great in the prospective interest of my life that I had no hesitation in accepting it gratefully—a decision in which my wife (who shares my every thought) most fully and cordially concurred.

So soon as I could wind up my business affairs, we went to Dun Echt, living at first, in the absence of Lord

* The complete telescope was subsequently purchased from me by Lord Lindsay, and was presented by him to the City of Edinburgh, at the time when he transferred the other instruments of his observatory to the New Royal Observatory at Edinburgh. It is now mounted in the City Observatory on the Calton Hill, Edinburgh.

Digitized by Google

Crawford's family, in the Mansion House, and afterwards in a small house about two miles from the observatory until the dwelling-house of the observatory could be erected. The projected equipment consisted of an equatorial refractor by Grubb of 15 inches aperture and 15 feet focal length; a transit circle by Troughton and Simms, of 8 inches aperture and 8½ feet focus; an equatorial by T. Cooke and Sons of York, of 6 inches aperture and 6 feet focus; a heliometer by Repsold, of 4 French inches aperture and 5 feet focus, exchangeable with the Cooke equatorial, so that either one or the other could be used on the same stand; a silver-on-glass reflecting telescope (formerly my own property and already described); an altazimuth by Troughton and Simms, with 12-inch circles reading by micrometer-microscopes; a large chronograph with 4 barrels; a large Foucauld siderostat with a 16-inch circular mirror, to be used primarily with a horizontal telescope of 4 inches aperture and 40 feet focal length; and a portable transit instrument of 4 inches aperture mounted somewhat on the principle of Struve's prime vertical transit at Pulkowa, but provided with two pairs of bearings, so that it could be used in rapidly reversed positions on the same evening either in the meridian or in the prime vertical. In addition to discussion of the details of the working drawings for these instruments, plans had to be prepared for the construction and erection of their respective observatories, domes, etc., and the instruments when completed had to be tested, mounted, and adjusted. Added to this were the preparations for the expedition planned by Lord Lindsay to observe the transit of Venus at Mauritius in 1874, so that the years 1872–1874 were very busy ones. I had also to study and develop the use of the heliometer—an instrument of which I had no previous experience. The heliometer would not reach Dun Echt much before the end of 1873, and it was necessary to master its use before it was packed for transport to Mauritius.* Besides many visits to London and Dublin in connection with the construction of the transit circle and the equatorial, I went to Hamburg, to inspect the heliometer and attend the meeting of the Astronomische Gesellschaft there; to Pulkowa, to study the instruments and working of that great observatory; to Hanover, to attend the meeting of the German Transit of Venus Commission; and I also visited some of the other European observatories. In this way I made the acquaintance of the leading Continental and some of the American astronomers, obtaining at the same time a very complete insight into the working and organisation of large observatories.

Then followed the expedition to Mauritius. Lord Lindsay desired to have the longitude of his station at Mauritius determined as accurately as possible, because it seemed probable that it was likely to become a central one with which other surrounding stations would be connected. This expectation was fully justified, for the longitudes of no less than five stations, where the Transit of Venus was observed, were connected by chronometers with it: viz., Rodriguez, the British station; Pamplemousses (Mauritius), Dr Meldrum's station; Solitude (Mauritius), occupied by the German Transit of Venus Commission; Réunion, the Dutch Transit of Venus station;† and St Paul, a French Transit of Venus station.

Under these circumstances it was not thought desirable to rely solely on observations of the moon, and Lord Lindsay decided that an attempt should be made to connect Aden with Greenwich by telegraph, and Mauritius with Aden by chronometers.

It was at first arranged that Mr Hunter (of the British Government party) should remain at Suez to exchange signals with me on return to Aden after the transit. But a few days before I sailed from England we were informed that, as the arrangements of the mail steamers would not permit of my leaving Mauritius before the 8th of January 1875, the British observers and their instruments could not be detained in Egypt so long as the end of January, so that some other plan for determining the longitude of Aden had to be devised at the last moment. Letters on the subject were at once addressed to Professor Auwers of Berlin (Secretary of the German Transit of Venus Commission), and to Professor H. G. van de Sande Bakhuyzen of Leiden (on behalf of the Dutch Government). Professor Auwers replied by return of post to say that the German astronomers, who would sail for Mauritius by the mail following that by which I left, would have instructions to co-operate with Lord Lindsay's expedition in every possible way, and that one of the German astronomers would assist in the telegraphic connection of the longitudes of Suez and Aden on the return voyage. Professor Bakhuyzen also wrote to the effect that if German astronomers could not co-operate in the proposed work, one of the Dutch astronomers would certainly do so. The relief brought to my mind by these kind and prompt replies remains fresh in my memory.

Some months before this, marine chronometers had been hired from the chief makers who had suitable instruments at disposal; and these, to the number of fifty, were sent to Liverpool Observatory, there to be tested by Dr Hartnup, in order to determine their temperature coefficients. On 14th June 1874, I went to Liverpool Observatory, made observations for time, and the following day conveyed the fifty chronometers by railway to the Royal Observatory, Greenwich. The chronometers remained there until 18th June, when they were similarly

* See *Monthly Notices*, R.A.S., vol. xxxiv. pp. 279–300.

† A full account of these operations will be found in vol. iii. division 2, of the *Dun Echt Observatory Publications*.

Digitized by Google

taken to Southampton and duly mounted on their gimbals in a cabin of the Peninsular and Oriental Navigation Company's steamer *Mirzapore*, then lying in Southampton Docks.

I had no assistant, not even a servant, to accompany me. The chronometers were packed in six well-stuffed inner cases, and these were suspended by india-rubber bands in strong outer cases, the latter when at sea being separately mounted in large gimbals, swinging between strong wooden uprights fixed in a frame which could be secured to the floor of the cabin. But for this plan of packing and mounting, which I had carefully devised for the work, it would have been impossible for a single astronomer to have attempted the operation. Before my visit to Greenwich I had no misgivings as to the success of the arrangements. But when Sir George Airy and his assistants came to wish me good-bye, and when they saw me go off with all the chronometers on the top of two cabs, and no one but myself to look after them, it was evident that they regarded the whole matter as an experiment of very doubtful success, and did not envy the task before me. A first suspicion of these difficulties dawned upon me at the time, and they were fully realised before the expedition was over. Incessant watchfulness was necessary, and the anxiety connected with every move on shore and every embarkation or landing of the instruments was excessive, especially at places like Suez, Alexandria, Aden, and Mauritius, where only coloured labour was available. But all ended well.

On 19th June the *Mirzapore* sailed from Southampton and reached Malta on 27th June. I addressed a letter from the telegraphic office Malta to Professor Auwers at Berlin, pointing out the possibility of making an independent determination on the return voyage of the longitude of Suez *viâ* Malta, provided that the consent of the authorities of the Eastern Telegraph could be secured; and this the officials at Malta thought there would be no difficulty in obtaining. On 1st July the *Mirzapore* reached Alexandria, where Mr Gibbs, chief of the Eastern Telegraph Company's Mediterranean stations, entered with the utmost energy and good-will into the whole question of the proposed longitude operations, and a second letter was sent to Professor Auwers asking if he could arrange with the Continental authorities for use of the wires from Malta to Berlin, as in that case there would be no other difficulty in carrying out an independent determination of a chain of telegraphic longitudes connecting Berlin with Malta, Alexandria, Suez, and Aden. Long before the return voyage Professor Auwers had made all the necessary preliminary arrangements, and it only remained to carry out the work. It is unnecessary to describe the subsequent operations in detail, because a full account of them is given in vol. iii. of the *Dun Echt Observatory Publications*.

The work was carried out as thoroughly as the conditions imposed by circumstances would permit. Everything that could be done to eliminate or determine personal equations was done; but of course between the arrival and departure of a steamer from a particular port there was no time to build masonry pillars or to erect an observatory to protect one's instrument. The travelling observers had therefore to work in the open air and to adopt methods of observation which required little time for previous adjustment of their instruments.

Thus, for example, my own observations for time were made almost entirely by transits of stars in the vertical of the pole star, a method which I strongly recommend to any travelling observer who may have to determine longitudes under like circumstances. The theodolite has simply to be mounted on its tripod, levelled and pointed to the pole star. The successive operations are then as follows:—

1. Observe transit of the pole star over middle web, or note the instant at which the image of the pole star is caused to bisect the middle web.
2. Read the striding level in two reversed positions.
3. Without moving in azimuth, set the telescope ready to observe the transit of a star of small zenith distance, and immediately before the transit read the level in reversed positions.
4. Observe the transit of the star.
5. Repeat observation of level.
6. Reverse 180° in azimuth and again point on the pole star with the middle web, recording the time of pointing.
7. Read the striding level in two positions.
8. Without changing azimuth, set the telescope ready to observe the transit of a star of small zenith distance, and immediately before the transit read the level in reversed positions.
9. Observe the transit of the star.
10. Repeat the observation of level.

With a properly selected list of stars the operation is a very rapid one. In this way, even under conditions in which any motion of the observer affects the instrument, good time determinations can be made, for the observer can make a complete set of observations without changing his position.

Two interesting confirmations of the reliability of these longitude determinations have since been made. The

Digitized by Google

longitude of the transit circle, Royal Observatory, Cape of Good Hope, has been determined by two independent observations :—

(1) That in 1875, *viâ* Greenwich-Berlin, Berlin-Malta, Malta-Alexandria, Alexandria-Suez, and extended to the Cape by telegraphic operations in 1881, *viâ* Aden-Durban, Durban-Port Elizabeth and Port Elizabeth-Cape of Good Hope (Transit Circle) (*Dun Echt Publications*, vol. iii. div. 2).

(2) In 1908 *viâ* Greenwich-Ascension and Ascension-Cape of Good Hope (*Monthly Notices*, R.A.S., vol. lxix. pp. 91–97).

The results have been :—

	h	m	Sec.	s
By operation (1) Cape Transit Circle E. of Greenwich . .	1.	13.	54·696	±0·160 *
„ (2) „ „ . .	1.	13.	54·625	±0·022
			Sec.	
Difference . . .			0·071	

Having regard to the numerous links in the first of these chains, the coincidence of the results is remarkable.

The longitude of Malta was recently re-determined by direct submarine cable operations between Greenwich and Malta. The resulting longitude of Malta (Spencer's Monument) was found to be :—

	h	m	s	s
By the operations of 1875 . . .	E 0.	58.	2·65	
„ 1909 . . .	0.	58.	2·60	±0·010
			s	
Difference . . .			0·05	

Here, again, the agreement is sufficiently good.

Unfortunately, no telegraphic determination of the longitude of Mauritius has yet been made.

I reached Aden on 15th July by the *Mirzapore*, and sailed thence on 20th July by the S.S. *Godavery* of the Messageries Maritimes, which dropped anchor at Port Louis, Mauritius, on the morning of 4th August. I was cordially welcomed on arrival by Dr Meldrum, Director of the Royal Alfred Observatory at Pamplemousses, whose guest I became for several weeks whilst in search of a suitable station. The latter question was soon set at rest by the most generous and hospitable offer of Monsieur de Chazal, who placed the house and buildings of his estate of Belmont at Lord Lindsay's disposal. Preliminary levelling of the rock, removing of loose stones, and general preparation of the site were at once commenced. Then forty-two of Lord Lindsay's chronometers were employed in a double run—8th to 24th September—in H.M.S. *Shearwater* (Commander Wharton, R.N.) to connect Pamplemousses (the Royal Alfred Observatory, Mauritius) with the British Transit of Venus station at Rodriguez.

Lord Lindsay had sailed from England in his yacht *Venus* on the 9th of July, accompanied by Dr Copeland (subsequently my successor at Dun Echt and later Astronomer Royal for Scotland), Mr Henry Davis (photographic assistant), and Dr Blackley (surgeon of the expedition). Unfortunately, adverse winds and calms were encountered, so that it was not until 2nd November that the *Venus* reached Port Louis. Lord Lindsay had fortunately sent off, under

* In this result the longitude of the G.T. Survey point at Aden is taken from the operations of Lord Lindsay's expedition alone, without combination with the results of the British Transit of Venus expeditions and the work of the party from the G.T. Survey of India, viz. :—

	h	m	s	s	
Longitude of Aden (G.T. Survey Station) E. of Greenwich . .	2	59	55·711		(*Cape Annals*, vol. i. p. 62).
Cape West of Aden (G.T. Station)	1	46	1·015	±0·027	(*loc. cit.*, p. 58).
	h	m	sec.		
Cape E. of Greenwich	1	13	54·696		

The longitude of Aden (G.T. Station) as determined by the British Transit of Venus parties in Egypt, combined with the connection of Suez-Aden by the operations of the G.T. Survey of India, was as follows :—

	h	m	s	
Greenwich Mokattam (near Cairo)	2	5	6·24	(*Transit of Venus*, 1874, p. 288).
Mokattam-Suez	0	5	6·93	(*Transit of Venus*, 1874, p. 346).
Suez-Aden	0	49	42·66	(*G.T. Survey of India*, vol. ix. p. 105).
	h	m	s	
	2	59	55·83	

This result, combined with the accurate telegraphic connection of Aden-Cape (1908), would make

	h	m	s
Cape East of Greenwich.	1	13	54·82

and the discordance between it and the direct telegraphic longitude of the Cape becomes $0^s{\cdot}24$ instead of $0^s{\cdot}071$ from the results of the operations under Lord Lindsay.

Digitized by Google

charge of the observatory carpenter, the wooden houses, domes, etc., by the mail steamer which arrived at Mauritius early in September. It became thus possible to have everything in order for erection of the instruments so soon as Lord Lindsay and his party arrived. Within a week after their arrival at Belmont all the instruments were in working order. According to the programme prepared by Lord Lindsay and myself (*Monthly Notices*, R.A.S., xxxiv. pp. 296–300), it was intended that the observations of the minor planet *Juno* should commence on 10th October, but it was not until the 5th of November that the heliometer could be unpacked at Belmont. On 7th November the instrument was completely erected and adjusted by the sun and stars in daylight, and these adjustments, though tested frequently afterwards, were not again touched till the instrument was dismounted. The nights, which during September and October had been superb, became cloudy, and nothing could be done on the 7th, 8th, or 9th. The first observations were secured on 10th November, but under circumstances so unfavourable as to make them worthless, and it was not until 12th November (seven days after the opposition) that the first series of observations of any value was secured. This was a great disappointment, because we had counted upon obtaining a determination of the solar parallax from the observations of *Juno* alone that would be comparable in accuracy with that obtainable from the observations of all the numerous Transit of Venus expeditions put together. As it was, observations were secured on twelve evenings and eleven mornings before the end of November, when our programme terminated. The discussion gave, for the value of the solar parallax from six combinations:

$$8''{\cdot}77 \text{ prob. error } \pm 0''{\cdot}041,$$

and for the probable error of the place of the planet from one set of measures from two opposite stars $\pm 0''{\cdot}073$, apart, of course, from the errors of the places of the stars of comparison.

Concerning these results we remarked: "Considering that it was impossible to commence observations until a week after opposition, and that, in consequence, hardly one-third of the anticipated observations were secured, and these in circumstances the least favourable for parallax factor, we do not attach very much importance to the value of the parallax deduced. But we have at least now sound data on which to found calculation as to the value of the opposition of any minor planet for the future determination of the solar parallax."

A full account of these observations is given in vol. ii. of the *Dun Echt Observatory Publications*. They are referred to here at some length, because their discussion gave me the conviction that there were as yet undeveloped opportunities for the use of the heliometer—and that conviction very powerfully influenced a considerable part of my future work. I need not dwell on the other incidents of scientific life at Mauritius—they were chiefly concerned with the determination of latitude and longitude of surrounding stations, the observation of the Transit of Venus, and preparation for the return voyage.

Finally, in company with Dr Löw and Dr Pechüle, the members of the German expedition to Mauritius, I sailed by the mail steamer *Dupleix* on the afternoon of 8th January 1875, reaching Réunion the following morning. Two chronometers belonging to the Dutch Transit of Venus expedition were brought on board by Dr Oudemans and compared with Lord Lindsay's chronometers: thus the difference of longitude between Réunion and Belmont was determined.

The same evening the *Dupleix* left Réunion for Aden, taking the members of the Dutch expedition as additional passengers, viz.: Drs Oudemans, Kaiser, Bakhuyzen, jun., and Soeters.

A full account of the longitude determinations of Seychelles, Aden, Bombay, Suez, and Alexandria, made on the homeward journey, will be found in vol. iii. of the *Dun Echt Observatory Publications*.

When at Mauritius I had received a letter from General Stone, Chief of the Military Staff of the Khedive at Cairo, asking whether I could go on my return through Egypt and undertake to measure a base line for the projected survey of Egypt. Lord Lindsay most kindly consented to my so doing. My wife, who had spent the winter months in Cannes, joined me in Alexandria; and, so soon as the longitude observations were completed, we went to Cairo and proceeded to select a site for measurement of the base.

There was in possession of the Egyptian Government an excellent base-measuring apparatus constructed by Brunner of Paris, consisting of a bar of platinum, 4 metres in length, having immediately underneath it a similar bar of brass separated only from the platinum bar by small rollers. This measuring instrument was mounted on a ⊥-shaped iron girder, which in its turn could be mounted on tripods provided with proper adjustable camels. The whole was so arranged that successive distances between the optical axes of alligned micrometer-microscopes could be measured both in terms of the platinum and brass bars. The constants of this apparatus had been well determined at Paris, so there was every prospect of a good result. A site was selected on the western bank of the Nile, nearly in front of the "Sphynx," and we took up our residence in a house situated near the Great Pyramid. This house, very greatly enlarged, has now become the celebrated Mena Hotel; but in 1876 it consisted of only eight or ten rooms, and had never before been occupied. The Khedive supplied us with excellent servants, and

Digitized by Google

installed us most comfortably. The training of officers and men had then to be undertaken, and this, together with laying out the base line, casting concrete and terminal piers, etc., occupied some weeks.

During part of this time we had the pleasure of the company of Dr Döllen of the Pulkowa Observatory, who, after observing the Transit of Venus, had been spending some time at the baths of Helwan for the benefit of his health. He paid us a visit at the Pyramids and we spent some pleasant evenings together, observing with his own instrument transits of the same stars in the prime vertical at two stations, one of them immediately north and the other on the south side of the Great Pyramid, in order to ascertain whether it would be possible in this way to determine the deflection of the plumb-line produced by the attraction of the mass of the Pyramid. I remember, in discussing the question together, we came to the conclusion that the error most likely to systematically affect the result would be the lateral refraction which might be created by convection currents produced by radiation at night from the heated stone-work of the Pyramid. Dr Döllen took the observations with him to Pulkowa, but whether his failing health (which ended in his lamented death) prevented him from reducing them, or whether he found the results to be anomalous, due to the cause above mentioned, I have never been able to ascertain. When actual work of base measurement was attempted, I found that the officers of the Egyptian engineers were so unfitted for the work, both in habit of thought and training, that I could not rely upon them. Mis-readings of drumheads, unreported knocks to the microscopes, etc., so constantly occurred that we had to begin measurement again and again. At last I was driven to the conclusion that the operation would have to be abandoned until there was time to put these officers through a much longer course of training and instruction, or until some reliable trained surveyor could be found to watch and read the forward microscope, whilst I looked after the following one. The former of these alternatives was not a possible one, because I could not ask for such long leave of absence from Lord Lindsay; but fortunately the difficulty was solved in another way. Soon after Dr Döllen left us, I learned that Professor Watson of Ann Arbor (so well known to astronomers for his discovery of minor planets and for his researches on their orbits) was in Cairo. I immediately called upon him and told him of my difficulties. He at once most kindly consented to share the work, and he and Mrs Watson came a few days afterwards as our guests at the Pyramids. With Professor Watson at one end of the bar and myself at the other, the work proceeded without hitch or difficulty and was soon satisfactorily completed.*

We then embarked at Alexandria for England, with the chronometers and altazimuth in charge. On our arrival the chronometers were sent to Liverpool for a second trial, and we returned to Dun Echt. The remainder of the year 1875 and part of 1876 were chiefly devoted to further researches on the constants of the heliometer, to determinations of personal equation with different instruments, and to the reduction of the great mass of observations of all kinds collected during the expedition.

In 1876 I left Dun Echt and began preparations for an expedition to determine the solar parallax by means of heliometer observations of the diurnal parallax of Mars at its very favourable opposition in the year 1877.

I did not anticipate that it would be possible to measure the angular distance between a star and a disc like that of Mars with the same precision as that between a star and minor planet like Juno (whose disc is indistinguishable from that of a star). But the geometrical conditions at the opposition of Mars in 1877 were so exceptionally favourable and so superior to those offered by any minor planet then known, that it seemed to be imperative to take advantage of the opportunity.

I had applied to Lord Lindsay for the loan of his heliometer, conditionally that I could otherwise obtain the means of observing the approaching opposition of Mars. I shall never forget his kind and ready consent to my proposal, and the effective assistance which he afterwards rendered in every step connected with the progress of the preparations.

In the autumn of 1876 I applied to the Committee of the Government Grant Fund of the Royal Society for a sum of £500 to enable me to carry out an expedition to St Helena or the Island of Ascension, and explained fully the object of the expedition and the proposed methods of observation. I undertook at the same time to defray any costs of the expedition which might exceed £500 at my own charge; or, if the expedition cost less than this sum, to return the balance of the money. There were, however, so many applicants for aid in other important researches, that the Committee did not feel justified in granting so large a sum (one-eighth part of the grant for the year) to one object, however important; and, believing it of no use to vote a smaller sum, they recommended that the matter should be independently provided by Government.

To avoid unnecessary delay, however, I referred the matter to the Council of the Royal Astronomical Society.

* The papers connected with the base measurement were deposited with General Stone at Cairo and appear to have subsequently been lost. I have also since learned that the Arabs have uncovered the concrete piers and chiselled out the gun-metal blocks on which the lines defining the terminals of the various sections of the base were engraved.

Digitized by Google

There it received the most cordial support, and finally the requisite sum of £500 was voted by the Council on the understanding that £250 would be repaid to the Society on the joint security of Lord Lindsay, Mr de la Rue, and Mr Spottiswoode, provided that the latter sum was not obtained from some other source. In 1878, however, the £250 in question was provided by the Government Grant Fund of the Royal Society; but I shall ever bear in grateful remembrance the prompt and timely aid of the Royal Astronomical Society, and the generous and ready help of those men by whose timely action the last difficulties were removed.

An accident to the heliometer, however, nearly ruined the prospects of the expedition. Before finally packing that instrument for the journey it seemed to me desirable to set it up and test it at the rooms of the R.A.S. The mounting, although "a universal equatorial" in design, had never been intended for use in a lower latitude than Mauritius, and considerable alterations had to be made in the arrangement of the counterpoises, etc., before all would work properly when the polar axis was inclined at 8° (the latitude of Ascension). These alterations had been made, and it came to be a very nice question whether one of the counterpoises would be quite clear of everything in all positions, and, before deciding what should be done, I wished to make a small change in the inclination of the polar axis. A reference to Plate 6, vol. ii. of the *Dun Echt Publications* will show how the inclination of the polar axis is changed by the elevating piece S. A plunger fits into this elevating piece; this plunger is hollow, and in it works a screw which is attached to and can be rotated with S. Of course the elevating piece and the plunger used for low latitudes were much longer than those shown in the figure referred to (which is drawn for the latitude of Dun Echt Observatory, 57° 9′6); but, by some oversight, the internal screw attached to S was made much shorter than need be. Without my knowing it, the lower end of the polar axis was at the moment only kept down by a part of a turn of the screw, and the consequence was, that in diminishing slightly the inclination of the axis, the screw gave out, the overhanging weight of the declination axis, heliometer, and counterpoises tilted the box of the polar axis upwards, and, the hour circle not being attached, the polar axis slipped out, and the tube, declination axis, counterpoises, and polar axis came down with a crash upon the floor. Fortunately the heliometer alighted upon the eye-end, which was driven through the floor by the force of the fall and twisted off. As the tube fell, the heliometer head came down upon one of the copper caps provided to protect the slides from dust, and the latter was considerably crushed by the blow; but the fall had been so much broken by the tearing off of the eye-end, and afterwards by the resistance of the copper cap, that the shock was insufficient to bring the cap into contact with the slides, or to strain or damage the head in any way. Fortunately, also, the micrometer was not in its place, and thus, though the apparent damage was very great, no injury whatever was done to the heliometer slides and the micrometer work.

The heliometer tube was sent at once to Messrs Troughton and Simms, whilst Messrs T. Cooke and Sons of York, and Mr John Browning of London repaired the mounting.

Within ten days all was again in order, the instrument tested, packed, and stowed on board ship.

A reference to the following papers, printed in the *Monthly Notices* of the Society, will sufficiently indicate to the reader the general idea on which the expedition was founded, and the manner in which it was carried out :—

Monthly Notices, vol. xxxvii. pp. 310–326.
„ vol. xxxviii. pp. 1– 11.
„ vol. do. pp. 17– 21.
„ vol. do. pp. 57– 58.
„ vol. do. pp. 89– 90.

A popular account of the expedition, written by my wife,* who accompanied me on the expedition and shared throughout its watchings and anxieties, sufficiently describes its incidents and details.

The definitive scientific results of the expedition are published in the *Memoirs of the Royal Astronomical Society*, vol. xlvi. pp. 1–172.

They consisted—

1. In the definitive discovery of systematic personality in meridian determinations of right ascension, depending on the star's magnitude.

2. A determination of the solar parallax, viz. 8″·78, with the probable error ± 0″·012.

3. The approximate determination of the latitude and longitude of the Islands of Ascension and St Helena.

4. The conclusion that the definitive determination of the solar parallax must rest upon the observation of minor planets.

On our return from Ascension towards the end of January 1878, we settled down in rooms in London, and I began the reduction of the observations of the expedition. The work was not far advanced when I was summoned to

* *Six Months in Ascension*, by Mrs Gill—An Unscientific Account of a Scientific Expedition: John Murray, London, 1878.

Digitized by Google

Aberdeen on account of the sudden illness of my father, who died a few days afterwards at the age of eighty-nine years. I was still in Aberdeen, occupied with the business affairs of my father's estate, when, early in May 1878, news reached me of the death of the Rev. Robert Main, Radcliffe Observer at Oxford. I at once went to London and became a candidate for the post, but the vacancy was filled by the appointment of Mr E. J. Stone, then H.M. Astronomer at the Cape of Good Hope.

I accordingly forwarded to the Admiralty the testimonials which I had received from my former teacher, Professor Clerk Maxwell, and from many of the principal astronomers in Europe and America, in support of my candidature for Oxford, and offered myself as a candidate for the vacancy at the Cape. I was informed by the Admiralty, in reply, that my application for the post of astronomer at the Cape was premature, because Mr Stone had given no notice of his intention to retire from the Cape. I could therefore only ask that my testimonials might be retained for consideration when a vacancy should occur.

A long delay in making the Cape appointment ensued, because the Radcliffe trustees, with much liberality and consideration, allowed Mr Stone to remain at the Cape until he should have completed the great Catalogue of Southern Stars which had chiefly occupied his attention during his directorate;* and Mr Stone, for this reason, deferred the formal tender of his resignation to the Admiralty.

Meanwhile, acting on the belief that I had small chance of success (because the Astronomer Royal supported another candidate), I had taken a house in London, furnished it, and settled down to complete the work of the Ascension expedition. But, on the 10th of February 1879, as I was leaving my club, I met the Hydrographer of the Navy, who said, "Let me congratulate you." I replied, "On what?"—when he said, somewhat hurriedly, "Oh, never mind; perhaps I am wrong." I drove home hastily to make inquiry, and found a letter from Lord Crawford, addressed to me as Astronomer Royal at the Cape, congratulating me on election to that office. It was evident that Lord Crawford had written in support of my candidature, and had received an early intimation of the Admiralty decision. With his invariable kindness he had lost no time in sending me his congratulations, which thus preceded the official communication by a few hours. Needless to say, it was a double gratification to me to receive the first news of my good fortune at the hands of my former chief,—an ever-true and kind friend.

My wife remained in London attending to the disposal of the lease of our house, the packing up of furniture and other preparations for our departure, whilst I visited the observatories at Paris, Leiden, Groningen, Hamburg, Copenhagen, Helsingfors, Pulkowa, Strassburg, and Paris. I was thus enabled to enter into personal relations with their respective directors,—relations which were afterwards of much value. The visit to Strassburg was a specially memorable one, because there one not only had the opportunity of discussing future plans and methods of work with Professor Winnecke, the greatest teacher of practical astronomy of his day, but also because one met there his senior students in astronomy—Küstner, Hartwig, Hermann Struve, Ambronn, and Elkin, all of whom have since risen to distinguished positions, and done valuable work in astronomy. The last of these had selected for the subject of his inaugural dissertation for his university degree, "The Parallax, Proper Motion, and Masses of α_1 and α_2 Centauri." When I told Elkin that I intended to make heliometer researches on stellar parallax at the Cape, and suggested that he should come as my guest there and share the work, he at once consented to do so whenever he had attained his final university degree.

At Berlin I had the advantage of some long discussions with Dr Auwers, which led afterwards to much valuable co-operation with German observatories.

My wife and I reached the Cape on the 26th of May 1879, after a voyage of twenty-four days in the R.M.S. *Taymouth Castle*. Mr Stone welcomed us on arrival and, to my great regret, informed me that he must sail the following afternoon for England; thus there was little time to discuss with him the past and future policy of the observatory. This, fortunately, was the less necessary, because Mr Stone, as already stated, had originally come to the Cape with a special object in view, viz., to make a catalogue of the stars of the southern heavens to the 7th magnitude; and, having completed the work of observation and reduction, he had packed up all the manuscripts in connection with it for final revision and publication in England.

The way was thus, so far, cleared for a new departure. I was fettered by no official instructions and had therefore a free hand to do that which appeared to me best for the advancement of astronomy; the only restraints being those imposed by the shortcomings in available means and instruments.

In dealing with the further history of the Cape Observatory, it seems better to endeavour to trace the progress of its various departments separately, rather than to attempt a continuous record of its work as a whole. For this purpose it may be best to follow the account of its instrumental equipment, and to return to the form of historical statement.

* See p. xxvii.

Digitized by Google

INSTRUMENTAL EQUIPMENT.

In June 1879 the only astronomical instruments available for observation were the non-reversible Transit Circle, the 7-inch Equatorial, and the Photo-Heliograph.

"THE AIRY TRANSIT CIRCLE."

The first of these instruments—almost a duplicate of Airy's transit circle at Greenwich—was mounted, as already stated (p. xxii), in 1855, and had been in continuous use since that date. In June 1879 it was in bad repair: the micrometer screws were worn and affected by large errors; the surfaces of the flint lens of the object glass were fogged and deteriorated; the pivots of the relief-friction wheels were rusted in their bearings, so that one of the wheels did not rotate at all, and a hollow in its periphery had been worn by the friction of the turned surface of the transit axis which rested upon it. The whole instrument, in fact, was in need of general overhaul. Most of the faults were capable of remedy; but the iustrument itself, being non-reversible, could not be regarded as a reliable one for fundamental observations. But, as Sir George Airy strongly opposed the view that a new reversible transit circle was necessary, there was no hope of immediate remedy of this defect in the instrumental equipment of the observatory, and one had to make the best of existing circumstances.

The micrometers were badly planned (see *Cape Meridian Observations*, 1879–81, p. vii) and were sent at once to Messrs Troughton and Simms to be partially reconstructed and have new screws made and parallel wires substituted for the old micrometer cross wires. The relief-friction wheels were repaired, and the whole instrument cleaned and put in better order by local workmen.

The new screws of the circle micrometers, like their predecessors, were made of gun-metal or bronze. In course of a few years they, in turn, began to develop errors due to wear (*Cape Meridian Observations*, 1882–84, pp. vi to xxii). In February 1885, when the observations for the Cape Catalogue for the equinox 1885 had been completed, meridian observing was suspended during seven months, and the micrometers were again sent home to have steel screws made in lieu of the gun-metal ones, with the further improvement that the male screws were limited to the same threaded length as the female screw bearings, by which device the effects of wear are greatly diminished.*

The positions of the heads of three of the micrometers with respect to the others were also reversed, so that in three of the screws the effect of wear took place in the opposite sense from that of the other three. As a result of these changes the error of the mean of the screws has remained very nearly constant to the present time. Advantage was taken of the same opportunity to have the object-glass repolished and various other improvements made, such as central illumination of the field instead of illumination from an inclined ring. The instrument was also fitted with means to adapt wire gauze screens (for determining the amount of personality in right ascension), depending on magnitude, and with a reversing prism (to eliminate the effect of personality depending upon the direction of motion across the field with respect to the observer). New collimators, having object-glasses of better definition, were also procured, and these were mounted in tubes with pivoted bearings so that the collimators could be easily lifted away and thus reflex observations be made to a much greater zenith distance. By the new method of mounting the collimators it also became possible to mount a meridian mark in the focus of a lens of 100 feet focus, and to observe this mark at any time without disturbing the collimators. With these changes the Airy transit circle remained in use until it was replaced in 1901 by the new reversible transit circle, described in pp. 36–114 of the present work.

An attempt was made later to improve the instrument by the substitution of a triple object-glass by T. Cooke and Sons of York in place of the original 8-inch object-glass by Troughton and Simms. This object-glass was far in advance of the original one in light-grasp, in sharpness of definition and extent of field, but it suffered from one fatal drawback, viz., its liability to change its focal length. This change was not a simple function of the temperature of the surrounding air, but depended chiefly, if not entirely, on the *difference* between the temperature of the thick central flint lens and that of the two external crown lenses. Thus, whilst in the beginning of a night's work the reflected image of the webs in an observation for Nadir was formed perfectly in the plane of the spider-

* This suggestion is due to Mr Maw.

Digitized by Google

webs themselves, a few hours later, when the crown lenses had cooled considerably faster than the thick central lens, the change of focus became so great that the reflex image of the webs could not be seen at all when the eye-piece was focussed on the webs themselves. To our great regret the use of the, otherwise excellent, Cooke triple lens had to be abandoned and a return made to the original object-glass. For purely differential observations, such as the observations of zones of stars referred to known fundamental stars, the Airy transit circle now leaves little to be desired, except perhaps an object-glass of more transparent glass and better definition.

THE 7-INCH EQUATORIAL.

This instrument was originally made by Merz, and was erected by Sir Thomas Maclear in 1849. The original mounting resembled in form the 15-inch refractor at Pulkowa, but the polar and equatorial axis were much too light and the clockwork and slow motion in R.A. very unsatisfactory.

Mr Stone had a new mounting made for the instrument by Troughton and Simms. This mounting is quite satisfactory in point of rigidity, but the driving clock and slow motion in R.A. are defective in construction and design. In 1879 the instrument was in a nearly useless state for any kind of refined micrometric observation. The object-glass was badly fogged, and there was no proper provision for micrometric observation in a dark field. In 1880 the object-glass was repolished and a new micrometer by Repsold, with proper alternative bright wires or bright field-illumination, was fitted. The driving clock still remains practically useless, but it would be necessary to send the instrument to the makers and have the clockwork and slow motion gear entirely redesigned and reconstructed before the instrument could be adapted to the accurate measurement of double stars. As there was no immediate intention to take up such work, and as the instrument with its new micrometer was admirably adapted for observations of comets by the method of differences of R.A. and Dec. from known stars, its use was confined to that purpose and to the observation of occultations, etc. In this field of work a long and specially valuable series of observations was made by Mr W. H. Finlay. The instrument was also very successfully employed by Mr R. T. A. Innes in searching for new double stars, in his revision of the Cape Photographic Durchmusterung, and in numerous observations of variable stars (*Cape Annals*, vol. ix. parts 1, 2, and 3).

THE PHOTO-HELIOGRAPH.

This was one of the old type of De la Rue photo-heliographs made by Dallmeyer, mounted in a very inconvenient wooden observatory, and giving, by a secondary magnifier, an image of the Sun about 4 inches in diameter. The stand was by no means satisfactory, and the instrument was never used during Gill's directorate. In 1885 its tube was dismounted and a coronagraph substituted, with which, at the suggestion of Sir William Huggins, and a Committee of the Royal Society, a long series of unsuccessful attempts to obtain photographs of the Sun's Corona without an eclipse was made.

THE 4-INCH HELIOMETER.

Being aware of the deficiency of the equipment of the observatory for refined micrometer research, and being desirous to carry out some investigations on the parallaxes of southern stars, Gill obtained, by private purchase from Lord Crawford, the Repsold heliometer, which had been so kindly lent for his expedition to Ascension in 1877, and he had a very rigid new equatorial stand made for it by Sir Howard Grubb. This new mounting was necessary, as the heliometer was originally adapted to the stand of a 6-inch equatorial by T. Cooke and Sons of York, which Lord Crawford desired to retain at Dun Echt. The instrument on its original mounting is fully described and figured in vol. ii. of the *Dun Echt Publications.*

He also had additional slow motion in position angle applied to the heliometer tube by Sir Howard Grubb, at the time when the new stand was made, and the instrument, thus equipped, was devoted to researches on stellar parallax (*Memoirs R.A.S.*, vol. xlviii. pp. 1–194). When the new 7-inch heliometer (described in *Cape Annals*, vol. vii. pp. 1–24) was supplied, Gill sold the heliometer part proper of the 4-inch instrument to Lord M'Laren, who lent it to the Royal Observatory, Edinburgh, where it was employed by Dr Halm in his spectroscopic researches on the period of the Sun's rotation. The equatorial stand was retained at the Cape and carried one of the two cameras employed in photographing the plates for the Cape Photographic Durchmusterung (see p. xlviii). When Mr R. T. A. Innes was appointed to the Transvaal Observatory, Gill lent the stand to him, and he mounted upon it a refracting telescope of 9 inches aperture by Sir Howard Grubb. The complete equatorial telescope thus formed was subsequently purchased by the Transvaal Government for the Johannesburg Observatory.

Digitized by Google

THE 6-INCH REFRACTOR.

This instrument was originally supplied as an additional instrument for observation of the transit of Venus in 1882. Its stand is a very rigid one, being made identically alike in form and dimensions with the Grubb stand of the 4-inch heliometer. The object-glass is of 6 inches diameter and 6 feet focus.

The instrument is mounted in a building formerly known as the "Wind Tower"—so named because it was originally constructed to contain a now obsolete form of anemometer, and was built on the model of the "Temple of the Winds" at Athens.

For the reception of the 6-inch equatorial this building was unroofed, and was covered by a revolving dome. A strong insulated concrete pillar of the necessary height was built to support the instrument; and a wooden floor, approached by a spiral staircase, was provided to give easy access to the telescope. Mr Finlay made with this instrument the first existing observation of the Great Comet of 1882, and discovered with it the Comet (1886 *e*) which bears his name. He also independently found Comet 1886 *f* after its perihelion passage; and his are the only post-perihelion observations of the Comet that were secured. Mr Finlay also in 1886 succeeded in finding with this instrument Winnecke's periodic Comet, which escaped detection in the northern hemisphere. The elevated position of this instrument permits observations to be made in parts of the sky which are not commanded by the 7-inch equatorial. It was by means of a photographic camera attached to this instrument that the pictures of the great Comet of 1882, which led to Gill's proposal of the photographic method of Star-charting,* were obtained.

The stand of the instrument was subsequently employed to carry one of the two photographic lenses used in making the plates for the Southern Photographic Durchmusterung. In 1898 a Zollner photometer, the property of the Astronomical Laboratory, Groningen, was attached to the 6-inch equatorial and was employed by Dr W. de Sitter in 1898 and 1899 to determine the visual magnitudes of stars in a number of areas situated in different galactic latitudes. The photographic magnitudes of these stars having been also intercompared by several series of plates, all taken in pairs nearly at the same time and the same altitude, it became possible to discuss whether the difference between the visual and photographic magnitude of any average star is or is not a function of its galactic latitude.

The 6-inch equatorial has also been used in occasional searches for comets and in frequent observations of occultations.

THE 7-INCH HELIOMETER.

The history of the acquisition of this instrument will be found at p. 126 of the present work, where an illustrated description of its observatory is also given. A fully illustrated description of the instrument itself will be found in the *Annals of the Cape Observatory*, vol. vii. It was ordered from Messrs A. Repsold and Sons in 1884, was completed and erected in the end of 1887, and from February 1888, when the first installation of the electric light was completed for its illumination, the instrument was brought into regular use.

The principal works executed with it have been :—

1. Observations of the minor planets *Iris*, *Victoria*, and *Sappho*, in conjunction with the heliometer observations of the Northern hemisphere to determine the solar parallax (*Cape Annals*, vols. v. and vi.).
2. Researches on stellar parallax (*Cape Annals*, vol. viii. part 2).
3. Observations of major planets (*Cape Annals*, vol. viii. part 1).
4. Observations of the mutual distances and position angles of Jupiter Satellites by Gill and Finlay in 1891 and by Cookson in 1901 and 1902 (*Cape Annals*, vol. xii. part 2).
5. Triangulation of the Southern Circumpolar Area (*Cape Annals*, vol. xi. part 1).

The instrument is still employed in the regular observation of the major planets, and has also been in considerable use for observations of comets and occultations.

THE ASTROGRAPHIC TELESCOPE.

A description of this instrument and its observatory is given at pp. 120–123 of the present work. Their construction was sanctioned on 1888 August 30. The telescope arrived from Sir Howard Grubb on 1890 June 11; it was mounted without delay and a series of experimental tests was immediately undertaken. In February 1891 the photographic object-glass, the eye-end of the guiding telescope, and the breech-piece carrying the photographic

* See p. xlix.

Digitized by Google

slide, were returned to Sir Howard Grubb for necessary alterations—the object-glass for a fault in the figure of one surface of the crown lens; the other parts for extensive remodelling which could not be effected at the Cape. These alterations were completed in September 1901, and it was not until 1892 July 26 that experimental work was finally concluded, and regular work, in accordance with the programme of the International Astrographic Congress, was commenced. The photographic part of that work is completely finished, both as to catalogue and chart plates, for the whole of the 1632 areas assigned to the Cape: the catalogue series of plates was made completely in duplicate. Besides miscellaneous photographs of comets, etc., 258 plates have been taken to intercompare the Kapteyn-Pritchard areas, 39 plates for comparison of areas in different galactic latitudes, 29 special plates of the polar area, 8 plates comparing 8 standard areas with the polar area. One hundred and twenty-three plates have been taken, with numerous exposures on each, to determine the light curve of R Velorum; 236 plates in connection with suspected variables in the revision of the *C.P.D.* In 1902–1905, 129 plates of Jupiter's Satellites (about 1200 exposures) were taken at the request of Dr De Sitter of Groningen.

The total number of exposures made with the instrument between July 1892 and the end of 1906 (apart from Mr M'Clean's work) amounted to 22,181—varying from four hours to a few seconds each. The guiding telescope (of 10 inches aperture) has been frequently employed in the observation of occultations.

On 1897 April 20 the normal work of the astrographic telescope was suspended for some months in order to attach the mounting of Mr Frank M'Clean's 20° objective prism of 12 inches aperture to the instrument, and to make preparatory arrangements for balancing the telescope. Mr M'Clean arrived at the end of May, and lived and worked at the observatory during June, July, and August. In September and October he was joined by Mrs M'Clean and other members of his family, and took up residence at Sea Point, a suburb of Cape Town; thence Mr M'Clean visited the observatory almost daily, and worked there every clear night. Within a few days of his arrival, the prism which Mr M'Clean had brought with him was mounted and counterpoised, and he commenced the completion of his spectroscopic survey of all stars to $3\frac{1}{2}$ magnitude by photographing the spectra of such of them as he could not observe from the latitude of Tunbridge Wells. His visit was rendered memorable not only by his discovery of the lines of oxygen in the spectra of certain classes of stars and the other scientific results which he secured, but by his constant kindness to all and the many benefits he conferred on the observatory during his visit.

THE VICTORIA TELESCOPE.

This instrument and its observatory were the munificent gift of Mr Frank M'Clean. A full illustrated description and history of the whole installation is given at pp. 1–33 of this work.

The visual telescope of 18 inches aperture has been employed occasionally for measurements of double stars, the observation of comets, etc., and, by Mr Innes, for the discovery of double stars.

The 24-inch photographic telescope has been occasionally employed for the ordinary celestial photography of comets, nebulæ, star clusters, etc.; but the main employment of the instrument has been in refined spectroscopic determinations of stellar velocities in the line of sight. A very large amount of work of this kind has been carried out.

THE REVERSIBLE TRANSIT CIRCLE.

Descriptions of this instrument and its observatory are given at pp. 36–117 of the present work, together with an account of the investigations made for determination of the errors of the micrometer screws, of the pivots, and of the errors of graduation of the circles. The instrument, after a long series of experimental investigations, has been devoted to fundamental meridian work, the results of which are in course of preparation for press.

THE THREE-FOOT ALTAZIMUTH.

This instrument was originally made by Troughton and Simms, under the superintendence of Colonel Strange, R.E., for the Great Trigonometrical Survey of India, but it proved to be too heavy for transport to the tops of mountains. It remained, therefore, unused in India until 1882, when, on the representation of General Walker, R.E., F.R.S., etc. (then Surveyor-General of India), it was permanently lent to the Cape Observatory. When the work with the 4-inch heliometer was completed, the dome, previously covering that instrument, was employed at another site to form an observatory for the Great Theodolite, and meridian marks at the foci of lenses of 150 feet focal

Digitized by Google

length were erected. The instrument, almost immediately on its arrival from India, was employed in making daylight observations of difference of azimuth and altitude between the Sun and the great Comet of that year (see *Cape Annals*, vol. i. part 1). Subsequently the errors of graduation of the circle, of the screws, and of the pivots were accurately investigated, and during 1885 and 1887 a large number of observations were made by Kapteyn's method (*Copernicus*, vol. iii. pp. 147–182) for the determination of fundamental declinations. The instrument is peculiarly well adapted for this research; but the loss of the only available observer in 1887, and the necessity for making the corresponding zenith telescope observations compelled limitation of the use of the instrument. The pressure of other work has, up to the present time, prevented the completion of this interesting investigation.

THE ZENITH TELESCOPE.

This instrument was originally constructed by Troughton and Simms in 1883 for use as a transit instrument and zenith telescope in the Geodetic Survey of S. Africa. It was found to be too heavy for convenient use in the field, and was transferred to the observatory, where it was mounted in one of the Transit of Venus huts which had been employed at Montagu Road in 1882. The instrument is of the form known as "a broken transit." The object glass is of 3 inches aperture, and light from an object viewed through it falls on the right-angled prism of total reflection fixed in the horizontal axis, whence it is reflected along the horizontal axis to the micrometer ocular attached to one of the pivots. A small divided circle serves to set the instrument in altitude. A box, carrying two fine levels, turns on the horizontal axis, and the box can be rigorously clamped to that axis after the bubbles of the levels have been set approximately to the middle of their range. The cast-iron plate which carries the uprights, to which the segmental bearings of the pivots are attached, rests upon a lower plate, which, in its turn, is supported by three levelling screws. The instrument can thus be reversed in either of two ways: (*a*) the upper plate can be slightly raised about 0·02 inch from the lower plate by a screw; and thus, when so raised, the upper plate, and with it the instrument, can be easily and rapidly reversed; (*b*) by means of an excentric, worked by a handle, the instrument can be raised from its bearings, reversed, and be again lowered on its bearings in the reversed position. Thus, in the process of reversal by method (*a*), the pivots remain in their bearings, and the amount of reversal of the upper plate is regulated by stops. By method (*b*) the pivots rest in opposite bearings after reversal, and no stop is required to define the exact reversal of the axis by 180°. But method (*a*) is much less liable to such shock or disturbance of the level as may be produced when the instrument is lowered into its bearings; and method (*a*) was therefore adopted.

The instrument was employed in 1889 and 1890 in connecting the northern and southern systems of declination by Horrebow's (Talcott's) method.

In 1891 the instrument was to some extent remodelled. A new axis-prism of superior definition was provided to replace the originally defective one, and a new registering micrometer, by Repsold, was supplied.

From 1892 to 1894 inclusive a new series of observations was made by Gill and Finlay for the purpose of investigating change of latitude, and, if possible, of affording a new determination of the constant of aberration. The results are published in *Monthly Notices*, vol. lviii. p. 34.

PORTABLE INSTRUMENTS.

Besides the fixed instruments above described, the observatory has in custody various portable instruments of interest. The old portable instruments used by Fallows are still in existence, but they are of no value for modern work. One of the 3-inch transit instruments employed in the longitude operations connecting Aden, Durban, and the Cape (*Cape Annals*, vol. i. part 2) is still at the observatory, as also the 12-inch vertical circle by Troughton and Simms, which has been used in longitude operations on the West Coast of Africa, and was originally sent to the Cape in connection with the Transit of Venus expeditions of 1882.

There is also in the custody of the observatory the fine 18-inch theodolite by Troughton and Simms, described in vol. i. of the *Geodetic Survey of South Africa*.

Digitized by Google

ASTRONOMICAL RESULTS.

MERIDIAN OBSERVATIONS.

As already stated (p. xiii), the commencement of regular operations at the Cape Observatory was of necessity delayed until the erection of the transit instrument and mural circle in April 1829, and the first series of observations with these instruments was brought to a close by the untimely death of Fallows in 1831. The observations were finally reduced under the direction of Sir George Airy, and published by him in 1851 (*Mem. R.A.S.*, vol. xix. pp. 1–102).

The catalogue contains 425 stars, of which, however, only 88 are observed in declination.

Henderson, Maclear's successor, served at the Cape only from May 1832 to May 1833, and then resigned his post (see p. xvi). He took his Cape observations with him to Edinburgh, and they were there reduced and finally published by him, the Declinations in 1837 (*Mem. R.A.S.*, vol. x. pp. 49–89); the Right Ascensions in 1846 (*Mem. R.A.S.*, vol. xv. pp. 129–146).

The catalogues contain the right ascensions of 152 stars in the Southern and 22 in the Northern hemisphere, the stars being observed from 10 to 89 times each; and the declinations of 125 stars in the Southern and 27 in the Northern hemisphere, with from 5 to 141 observations of each. The observations are compared with those of La Caille, Bradley, Piazzi, Rumker, Johnson, and Pond.

During the period of Sir Thomas Maclear's directorate, a very large number of meridian observations were made, especially during the periods 1834–40; 1848–53; and 1855–60. From 1840 to 1848 the strength of the observatory was mainly thrown upon the measurement of Maclear's arc of the meridian, and between 1853 and 1855 the new transit circle was erected. Owing to the inadequate strength of the computing staff the reduction of these observations fell into arrear.

The observations of 1834–1840 were reduced under Sir Thomas Maclear, and finally revised and published by Mr Stone in 1878, in shape of THE CAPE CATALOGUE OF 2892 STARS FOR THE EQUINOX 1840.

The observations of 1855–1860 (made with the, then new, non-reversible transit circle) were only partially reduced by Maclear; the reductions were finally completed and the results published by Mr Stone in shape of THE CAPE CATALOGUE OF 1159 STARS FOR THE EQUINOX 1860.

The observations of 1848–53 were partially reduced by Mr Stone. Gill's first care was to complete these reductions, to revise the whole work and prepare the catalogue, which he passed through press during his visit to England in 1884, in the form of THE CAPE CATALOGUE OF 4810 STARS FOR THE EQUINOX 1850.

The reduction of the meridian observations made during the concluding years of Sir T. Maclear's directorate (1860–70) was undertaken under Gill's directorate, and the results were finally published by him in the form of THE CAPE GENERAL CATALOGUE OF 1905 STARS FOR THE EQUINOX 1865. This work was distributed in the year 1900; its publication marked the end of arrears of reduction which had long pressed heavily on the energies of the staff.

Under Mr Stone's direction the meridian observations were actively prosecuted with the non-reversible transit circle from 1870 to 1879. Before the end of 1878 all La Caille's stars had been re-observed (in general three times each), and various lacunæ in La Caille's list were filled in between November 1878 and May 1879, whilst the reductions were kept up to date. Mr Stone, on his retirement from the Cape, took with him to Oxford all the documents necessary for the preparation of his catalogue, and there, in 1881, passed through press the complete work in the form of THE CAPE CATALOGUE OF 12,441 STARS FOR THE EQUINOX 1880.

. . . . . .

The first Star Catalogue prepared under Gill's direction was based on observations made between June 1879 and January 1885 inclusive. It contains:—

1. Accurate places (a minimum of 12 observations in each co-ordinate) of 303 standard stars for the meridian observations of Schönfeld's zones. These standard stars were, at Gill's request, selected by Professor Auwers.

2. Stars specially selected, in conjunction with Greenwich and Leiden, for the determination of astronomical refractions.

3. All stars which were employed in the determination of places of comets at the Cape during the period in question.

Digitized by Google

4. All stars of which occultations by the moon were observed.
5. A list of stars observed in 1882 with the minor planets *Victoria* and *Sappho*.
6. Circumpolar and time stars employed in the longitude operations of 1881 and 1882.
7. Stars employed in the latitude observations of the Geodetic Survey.
8. Comparison stars employed in the heliometer determinations of stellar parallax.
9. Zones of stars employed for the determination of the scale value of heliometers.
10. Miscellaneous stars observed at the request of various astronomers.

The catalogue was published in 1894 in the form of THE CAPE CATALOGUE of 1713 STARS FOR THE EQUINOX 1885.

Published as an appendix to the Cape Catalogue for 1885 was a CATALOGUE OF 104 SOUTHERN CIRCUMPOLAR STARS. The star places are derived from observations of pairs of successive transits, above and below pole, made during the winter seasons of 1881, 1882, 1884, 1886, 1887, and 1888. The catalogue was compiled for the purpose of deriving the azimuths of the transit circle in the reduction of the observations for the General Catalogue of Stars for the Equinox 1890.

THE CAPE TEN-YEAR CATALOGUE FOR 1890 was based on all the meridian observations made from 1885 August 24 to the end of 1895. It contains :—

(1) Stars of the 4th magnitude, or brighter, which can be conveniently observed at the Cape, and all stars additional to these which are likely to be required for future use in any of the national ephemerides.

(2) Southern circumpolar stars.

(3) Stars employed in the latitude and longitude operations connected with the Geodetic Survey.

(4) Stars employed as comparison stars in the heliometer observations of the minor planets *Iris*, *Victoria*, and *Sappho* in 1888 and 1889, and the Opposition of Mars in 1892.

(5) Stars observed with the zenith telescope.

(6) Comet comparison stars.

(7) Stars occulted by the moon.

The declinations are corrected for variation of latitude, and a table is given containing corrections applicable to the right ascensions as a function of the star's magnitude.

The catalogue was published in 1899 and contains the positions of 3007 stars ; most of the star places depend on a considerable number of observations.

The preface contains comparisons with the following catalogues :—

Cape 1880, Melbourne 1880, Greenwich 1880, Cape 1885, Radcliffe 1900, Greenwich 1890, Auwers' Fundamental (B.J. 1890), Newcomb (N.A. 1890).

An appendix contains "Separate Meridian Observations of α Canis Majoris, α Canis Minoris, α Centauri, β Centauri." The final appendix discusses all the existing observations of 24 selected southern circumpolar stars, with the exception of the places of La Caille, Brisbane, Rumker, Gillis, and Moestea, which have been excluded because of the insufficient stability of the instruments employed or our imperfect knowledge of the errors of their adjustment. This appendix also gives the computed mean places of these 24 circumpolar stars for every year from 1875 to 1920.

. . . . . .

The next meridian work undertaken was the observation of the "Étoiles de Repère" for the plates of the Cape Astrographic Zone (declination $-40°$ to $-51°$). The stars were selected from the actual plates—some 10 to 12 stars on each plate. For the zone $-40°$ to $-43°$ (both inclusive) the observations were made in 1896 and 1897, there being, in general, 5 observations of each star. The zone $-44°$ to $-47°$ was completely observed in 1898, and that of $-48°$ $-51°$ in 1899 ; but, in these two latter years, only three observations of each star were, as a rule, made.

THE CAPE CATALOGUE OF ASTROGRAPHIC STANDARD STARS was completed in manuscript and sent to press in 1902 August 6, but its publication was kept back by long delays on the part of the printer, so that the work was not finally issued until 1906. Besides the places of 8560 stars for the equinox 1900, the work contains an appendix giving a complete detailed comparison of the observed star places, with the results of all previous accurate observations, and this comparison yields proper motions for fully two-thirds of the stars of the catalogue. Many of these proper motions, however, depend only upon comparison with the Cordoba zones for their determination.

Having thus provided the meridian observations necessary for the reduction of the measures of the Astrographic Catalogue plates, it became necessary, before the end of 1899, to prepare a new working list to fully occupy the non-reversible transit circle until such time as the chief observing force could be thrown upon work with the new reversible transit circle, which was then in course of construction.

Digitized by Google

At the "International Conference on Fundamental Stars," held at Paris in the year 1896, the following resolution was adopted :—

Resolution 9.

(*a*) Il y a lieu d'adopter un catalogue commun d'étoiles zodiacales pour les observations de planètes effectuées par les méthodes héliométriques ou par d'autres méthodes différentielles ; et de prendre, comme point de départ pour sa construction, les positions du catalogue fondamental provisoire.

(*b*) La distribution des étoiles sera celle qui a été proposée par M. Gill.

(*c*) L'Observation de ces étoiles sera recommendée d'une manière particulière aux observatoires.

A list of 2798 zodiacal stars for the equinox 1905 was prepared in accordance with the terms of the above resolution.

The limits of the zodiacal zone covered by these stars are sufficiently wide to permit the determination of the moon's place at any observatory by heliometer measures of distance or position angle of a lunar crater from suitable surrounding stars in any part of the moon's orbit, or to determine in a similar way the position of any of the major planets ; but care was taken to exceed as little as possible the minimum number of stars necessary for fully attaining this end.

The meridian observations of these stars were made in the years 1900 to 1904, and the mean results are given in PART I. OF THE CAPE GENERAL CATALOGUE FOR 1900. Besides the 2798 zodiacal stars, Part I. of this catalogue contains :—

(*a*) Stars not contained in the Cape Catalogue for 1885 and 1890 of which occultations have been observed at the Cape.

(*b*) Additional comparison stars, north of the Cape zenith, which have been employed in planetary and comet observations at the Cape.

(*c*) Stars, north of the zenith, employed in survey operations.

(*d*) Stars 8·5 magnitude, or brighter, north of the Cape zenith, which are contained in the Cape Photographic Durchmusterung, but are not contained in any catalogue of precision.

(*e*) Stars, north of the Cape zenith, requiring further observation in connection with queries raised in the revision of the *C.P.D.*

(*f*) Additional reference or comparison stars used in the heliometer observations of planets at the Cape since 1897.*

CATALOGUE 1900 I. contains 3365 stars, all north of the Cape zenith.

CATALOGUE 1900 II. contains 995 stars south of the Cape zenith, selected as follows :—

1. All stars of 8·5 magnitude, or brighter, south of the Cape zenith, which are contained in the Cape Photographic Durchmusterung, but not in any catalogue of precision. Exception is made of the stars between declination $-40°$ and $-52°$, because the few stars of that class which do not occur in the Cape Catalogue of 8560 Astrographic Standards (1900) will be determined with all necessary precision from measurement of the Cape Astrographic plates.

2. Stars south of the Cape zenith which require further observation in connection with queries raised in the revision of the *C.P.D.*

3. Comparison stars, south of Cape zenith, used in observations of comets, etc.

5. Stars used in survey operations.

CATALOGUE 1900 III. contains the places of 63 faint stars of which occultations by the moon have been observed. Their positions have been determined by differential observations from the star whose number in Catalogue I. is given in the last column.

CATALOGUE 1900 IV. contains the places of 41 stars which have been derived from the measurement of special photographic plates. The stars numbered 4431 to 4464 all occur in the *C.P.D.*, and are brighter than $8\frac{1}{2}$ magnitude, but are not to be found in any catalogue of precision. They form a cluster, the components of which are too close together for economical observation with the transit circle. The remainder of the list consists of faint stars of which occultations by the moon have been observed.

. . . . . .

THE CAPE CATALOGUE OF 1680 STARS FOR 1900 FROM OBSERVATIONS OF 1905–1906.—When the work connected with THE CAPE GENERAL CATALOGUE OF STARS FOR 1900 was completed, the attention of the meridian staff was

* Since the end of 1897 all the oppositions of major planets have been observed at the Cape with the heliometer.

Digitized by Google

chiefly diverted to observations with the new reversible transit circle, in order to create a new Fundamental Catalogue of Stars, for which the working list had been carefully prepared.

To avoid interruption of the observations of this list, the old transit circle was employed for the observation of miscellaneous stars, such as those whose places are required in connection with the Geodetic Survey, or of which occultations had been observed by the moon, or which had been used as comet comparison stars, etc. About the same time a request was received from Professor Boss for observations of a series of 1100 stars south of declination $-30°$, which he desired to have to strengthen the positions of the New Catalogue of Stars to the 7th Magnitude which he proposed to publish. These 1100 stars were accordingly added to the working list for the old transit circle, and the observations for the whole series were completed during the years 1905 and 1906.

In order to meet the wishes of Professor Boss, the reduction of the observations received preferential treatment, so that the catalogue was printed in 1907. There are, as a rule, three observations of each star. The results are corrected in R.A. for the personality of the observer depending on the magnitude of the star, and in declination for variation of latitude.

. . . . . .

The next Star Catalogue to be issued will be a fundamental one based on observations with the new reversible transit circle.

THE CAPE PHOTOGRAPHIC DURCHMUSTERUNG.

On the early morning of the 8th of September 1882 (civil time), Mr W. H. Finlay, then First Assistant of the Cape Observatory, when on the way to his house after observing an occultation of the star 5 Cancri, saw a bright comet-like object in the constellation Hydra, which proved to be the afterwards celebrated Comet of that year. It appears that the Comet was seen by various less responsible observers several days before its discovery by Mr Finlay; but the fact remains that the accurate observations of this object which he secured, by returning to the observatory on the morning in question, are the first of any scientific value that exist.

The remarkable observations subsequently made in full daylight, and the Comet's sudden disappearance at the Sun's limb previous to transit across the Sun's disc on 17th September increased, in a high degree, the interest with which this remarkable object was followed by the Cape observers.

Gill was fully occupied at the time with heliometer observations for stellar parallax, and with a series of extra-meridian observations of the minor planet *Sappho* with the 7-inch equatorial, so it was not until 11th October, when the latter series was finished, that he was at liberty to devote much attention to the organisation of other methods of observing the Comet. It now appears certain that satisfactory photographic pictures of the Comet might have been obtained wherever it was visible during the period between 8th September and 14th November.

So early as 4th October several photographers in South Africa had obtained impressions of the Comet with their ordinary apparatus; amongst these were Mr Shoyer of Cape Town, Mr Simpson of the U.P. School, Aberdeen (Cape Colony), and Mr Fernyhough of Durban, Natal. Their photographs have no scientific value as representations of the Comet, since they were taken without means for following the diurnal motion during exposure. It happened that the axis of the brighter part of the tail was nearly parallel to the direction of the diurnal motion; and, the head of the Comet being sufficiently brilliant to produce a nearly instantaneous impression, the effect of diurnal motion was to create a very elongated impression of the nucleus, nearly coincident with the axis of the tail, and sufficient to lengthen the impression of the brighter part of the tail, so that, to the popular eye, a very brilliant picture of the Comet was the result. To Mr Shoyer and Mr Simpson, however, the observatory is indebted for certain information that the Comet could be photographed. We had, at that time, no suitable lens and no experience in the development of modern dry plates. Gill accordingly called upon Mr Allis, a photographer in the neighbouring village of Mowbray, of whose skill as a photographer he had previous experience. No sooner were the objects of his visit and the conditions necessary for success explained to him, than he at once volunteered all necessary aid, and entered into the work with heart and soul. The most suitable lens in his possession was a doublet by Ross (the work of the late Mr Dallmeyer, of $2\frac{1}{2}$ inches aperture and 11 inches focal length).* This lens was mounted on an ordinary camera, and the latter was attached to a stout board, which was then clamped to the counterpoise of the declination axis of the 6-inch Grubb equatorial. This counterpoise could be rotated with respect to the declination axis and then be clamped; it was thus easy to adjust the optical axis of the photographic lens in any required position with respect to the axis of the 6-inch telescope, so that, whilst the latter axis was directed to the nucleus of the Comet, the general image of the Comet occupied the centre of the field of the photographic lens. This done, and the counterpoise clamped, any motion given to the

* The lens is now the property of the observatory.

Digitized by Google

declination axis was common both to the telescope and camera. The cross, formed by the intersection of a pair of spider webs in the focus of the telescope, was now placed upon the image of the nucleus of the Comet or upon that of a neighbouring star, and, by means of clockwork aided by the slow motions in right ascension and declination, was kept accurately upon the object during the whole exposure. In three of the photographs thus obtained the nucleus was followed ; in three the image of a star was employed.

Paper copies of these photographs were forwarded to various astronomers and scientific societies, and they have since been published in vol. ii., part 1, of the *Annals of the Cape Observatory*; these reproductions, however, give a very inadequate idea of the details contained in the original negatives. The latter are deposited with the Royal Astronomical Society. Apart from their scientific interest as representations of the Comet itself, these photographs appeared to have a still wider interest from the fact that, notwithstanding the small optical power of the instrument with which they were obtained, they showed so many stars, and these so well defined over so large an area, as to suggest the practicability of employing similar, but more powerful, means for the construction of star-maps, on any required scale and to any required order of magnitude.

A short paper by Gill, expressing these views and accompanied by paper copies of the six photographs, was forwarded to Admiral Mouchez, and by him communicated to the Paris Academy of Sciences on the 26th of December 1882 (*Comptes Rendus*, vol. xcv. pp. 1342–43).* In his accompanying remarks, Admiral Mouchez endorses the view that these photographs point to the possibility of producing excellent star-charts by means of photography, and he afterwards told Gill that these pictures led him to encourage the brothers Henry to devote their attention to the construction of astrographic lenses, and the application of photography to astronomical work generally. The brilliant results which they soon attained are still fresh in the minds of astronomers, and mark an epoch in the history of astronomy in the nineteenth century.

Meanwhile, in November 1882, Gill wrote to Mr J. H. Dallmeyer requesting him to send him a lens of moderate dimensions for further experiment, as a preliminary step to ordering one for definitive work. Mr Dallmeyer, in reply, kindly forwarded a "Rapid Rectilinear Lens" of 4 inches aperture and 33 inches focal length, which reached the Cape in April 1883, and preliminary experiments were made with it in course of the year. Early in 1884 Gill went on leave of absence to England, and Mr Dallmeyer undertook to make a special doublet, which he hoped would prove to be better adapted for astrographic work than the ordinary "Rapid Rectilinear Lens"; but, as he could not at once obtain the glass which he required for the new lens, he very kindly lent a "Rapid Rectilinear Lens" of 6 inches aperture and 54 inches focus which he had in stock.

In September 1884 Gill applied for a grant of £300 from the Government Grant Fund of the Royal Society, partly for the purpose of making attempts to photograph the solar corona by the methods proposed by Dr Huggins, and partly to make star-maps by direct photography from the sky. The latter object was originally defined as follows:—

> The photographs of the Great Comet of 1882, which I obtained here with the assistance of Mr Allis, show that, with proper appliances, star-maps may be made by direct photography from the sky. I am most anxious to carry out this work for the southern heavens, being convinced that an accurate knowledge of star distribution according to magnitude can be more rapidly obtained in this way than in any other.†
>
> I can afford sufficient time for the organisation and supervision of the proposed researches, but to carry them out the services of a practical assistant are essential. . . .

In January 1885 the Government Grant Committee placed the sum of £300 at Gill's disposal, and Mr C. Ray Woods, whose services as photographic assistant had been provisionally secured beforehand, reached the Cape on 18th February of the same year.

After a number of preliminary experiments had been made, systematic work was began on the 10th of April and continued without interruption till its completion.

The vote from the Government Grant Fund of the Royal Society was renewed for the year 1886, but in November of the same year a resolution was passed postponing decision as to the continuation of the vote until after the meeting of the Astrographic Congress at Paris in April 1887. Meanwhile the following correspondence had taken place between Professor Kapteyn and Gill :—

EXTRACTS FROM CORRESPONDENCE WITH PROFESSOR J. C. KAPTEYN.

J. C. KAPTEYN to DAVID GILL.

LEIDEN, 16*th December* 1885.

. . . I must here break off, because this letter has to be dispatched an hour earlier than I expected. I will therefore write you another letter, which will reach you a week later. In that letter I will make bold to explain to you a proposal that I hope you will

* Simultaneously, a very similar paper was forwarded to Dr Huggins for communication to the Royal Society; but from some misunderstanding on his part it was not communicated to the Society.

† "Of course distribution by photographic magnitude might, in special cases, differ from that by eye estimation ; but knowledge of the one is just as valuable as knowledge of the other, and as useful for the purposes of cosmical astronomy."

Digitized by Google

not consider indelicate. It is, in the main, what follows:—If you will confide to me one or two of the negatives I will try my hand at them, and, if the result proves as I expect, I would gladly devote some years of my life to this work, which would disburden you a little, as I hope, and by which I would gain the honour of associating my name with one of the grandest undertakings of our time.

J. C. KAPTEYN to DAVID GILL.

LONDON, 23*rd December* 1885.

I have still to explain to you the proposal in my former letter, which I thought it better not to postpone, my resolutions being taken. In doing this, you will excuse me in premising so much about my private circumstances as seems necessary for the purpose.

In the year 1878 I was appointed Professor of Astronomy and Theoretical Mechanics at the University of Groningen, having been before, during a couple of years, observer at the Leiden Observatory. Directly on my appointment I proposed to the Government to fit out a little observatory where, besides instruments for teaching purposes, a heliometer of 6 inches aperture would be mounted. . . .

Perhaps I shall succeed after some years in getting one or two instruments with which truly scientific research may be prosecuted; but at all events a very long time will have to elapse before any such result may be looked for.

The first years of my Professorship once passed, my lectures left me considerable leisure, which it has been always my desire to devote to astronomical observations. . . .

Now, after your success in stellar photography, and especially after your letter in which you tell me "I am obliged to crave help where I can get it," it has occurred to me that by measuring and reducing your photographs I could contribute very effectually towards the success of an enormous and eminently useful undertaking. Since then I have revolved the idea in my mind, and I have come to the conclusion that if you will let me, and I can secure the necessary help, there is no one can be in better conditions to undertake this work than myself.

The former point being granted, it is my plan as to the latter—

1*st*. To request the Government to double the yearly subsidy of somewhat more than £40 that is granted for the acquisition of books and small astronomical instruments.

2*nd*. To request another subsidy of £80 for a series of consecutive years from the Society of Teyler, a very rich society, that is always very willing to bestow some money on really scientific pursuits.

With this sum I think I can procure the constant help of three persons to do the most mechanical part of the work, the copying and the simple arithmetical processes, while I myself would excute all the measurements, the computation of the tables of reduction, the comparison of catalogues, etc., for which work perhaps now and then the help of a student could be secured. . . .

Having once got the necessary information and tried the necessary experiments, a rough estimate of the time to be expended on the work may be made, and I will then be able to make you a definite proposal, stating the approximate time in which, and the approximate accuracy with which, I could undertake the whole business. Supposing that you are willing to leave the thing to other hands at all, I do not doubt but that we will soon agree as to these points. . . .

I have kept the letter here some days to talk the matter of the Photographic Durchmusterung over with Professor Bakhuyzen and his brother. I am bound to say that they were not very enthusiastic about the matter. Of course they thought the results, once reached, of immense value, but the drudgery to be gone through before these results are once got into the form of a catalogue almost unbearable. However, I think my enthusiasm for the matter will be equal to (say) six or seven years of such work. . . .

DAVID GILL to J. C. KAPTEYN.

CAPE OF GOOD HOPE, 9*th January* 1886.

Such a letter as yours of the 16th of December requires an immediate answer; I refer, of course, to the concluding portion, in which you offer some years of your life to co-operation with me in cataloguing the Photographic Durchmusterung of the southern heavens. . . .

Naturally, before you commit yourself to so serious a work, you desire to see a sample of the photographs on which so much labour is to be expended; accordingly, I send you two photographs representing the same area.

(Here follows a long account of instrumental details.)

DAVID GILL to J. C. KAPTEYN.

CAPE OF GOOD HOPE, 22*nd January* 1886.

. . . It will, I hope, be as satisfactory to you as it has been to me, that we have mutually, and almost simultaneously, confided to each other the objects of our work, our hopes, and our difficulties. I, with too much on hand, and you, with too little—both interested in precisely the same kind of work, and both intent on having such work done. . . .

I think you will find that my letter of 9th January anticipates most of your questions, and that my new apparatus fulfils all the requirements which you have suggested the desirability of realising. . . .

(Here some technical matters are discussed.)

For my part, I will undertake the reobservation or rephotographing of all doubtful points, all necessary re-examination of discordant magnitudes, all reobservation of stars with the transit circle, and so on. All such things are within the limits of my time and that of my staff. I think it would be of very great interest to continue the work to the Equator, for the sake of comparison with Schönfeld, but not until the work has first been completed from $-90°$ to $-23°$. It will be time enough, however, to settle that when we have seen how the work goes on. You probably know that I have obtained the money for this work from the Government Grant Fund of the Royal Society. The President, Professor Stokes, takes great interest in it, and I think he will be greatly pleased when he hears of your offer. Of course I shall not mention the matter till I hear definitely from you on the subject. I do not think it would be right to go on without the full consent of the Royal Society, but I do not think they will object to the plan if I do not ask for a larger grant than I receive at present. . . .

J. C. KAPTEYN to DAVID GILL.

GRONINGEN, 19*th April* 1886.

. . . I am now able to report almost perfect recovery (Professor Kapteyn had been ill). The answer from the Minister has only just now arrived. He writes that he thinks my proposal fit for acceptance, and that for the next seven years he will propose to

Digitized by Google

raise my subsidy to £80. For this year, on the contrary, the extra subsidy of £40 which I requested cannot be conceded. I have waited for this answer before addressing myself to the Teyler Society. So this money question is still in a somewhat unsatisfactory state. . . .

I am very grateful for your offer to endeavour to procure the money from the Government Grant Fund of the Royal Society, or even from your own pocket, . . . still, you will understand that for the honour of my University and country, I cannot accept this proposal before having tried to get from Dutch funds the means for executing the Dutch part of the intended work. If I fail in this, however, I certainly will reconsider your proposal. . . .

In the meantime I wish to begin the work, even with the prospect that at first it will not advance at a very rapid rate. So if you will send to me the pictures $-77°$ to $-90°$, I will immediately set to work. With the help of one assistant, I think I can get through that, perhaps, in half a year; this work will enable me to try various methods, and to decide definitively on the method to be adopted for the rest.

By the pressure of other work accumulated during my illness, I have not examined the photographs of the Orion region as thoroughly as I wished. Still, I have examined them closely enough (I have measured and discussed some three hundred stars) to have a tolerably clear idea what they will yield. They will certainly give as many stars as the Durchmusterung, up to magnitude 9·4, and by a single examination of one of the plates I have not found a single star wanting. Star-like specks of the magnitude 9·0 or 9·2 seem to be very rare. On the contrary, the number of specks equal to the fainter stars has somewhat exceeded my expectations. I think, as you seem to do, that it will be absolutely necessary to examine two plates at the same time.

(The remainder of this letter discusses purely technical matters.)

DAVID GILL to J. C. KAPTEYN.

CAPE OF GOOD HOPE, 20*th May* 1886.

. . . I am pleased to hear that your Government is prepared, so far, to meet your wishes. The best thing is to proceed with the means available, and prove by "something attempted, something done," that the work is worthy of continued support. . . .

I have sent the duplicate pictures $-77°$ to $-90°$, of which the necessary particulars are enclosed. I shall send to Professor Stokes (Pres. R.S.) extracts from the correspondence that has passed between us on this subject, and request the approval of the Royal Society for what I have done, and what is proposed to be done.

It is unnecessary to follow this correspondence further. Early in 1887 the circumpolar plates were measured and reduced by Professor Kapteyn; ample proof was given that the apparatus and methods employed were rapid and convenient in use, and afforded results of all desirable accuracy for the purposes of a Durchmusterung. It was also shown that the stellar images were sufficiently sharp to be easily measurable to a second of arc, and a parallactic instrument capable of giving results of this accuracy was devised by Kapteyn and Gill, and worked out in detail by Messrs Repsold. The question remained whether, on the one hand, the catalogue from the already measured circumpolar plates should be used as a working catalogue for meridian observations of the circumpolar area, and the rest of the work be carried out with a more refined apparatus and an accuracy equivalent to a second of arc; or whether, on the other hand, the circumpolar results should be accepted as part of a general Durchmusterung to be continued with the same instrument, and a corresponding accuracy, to the northern limit of the proposed work.

In April 1887 the International Astrophotographic Congress decided to undertake the work of forming a catalogue of stars to the 11th magnitude, and making charts of the heavens approximately to the 14th magnitude.

Apparently the Committee of the Royal Society was of opinion that this resolution rendered the Photographic Durchmusterung unnecessary. It was not then generally realised what a long interval of time must elapse between the adoption of the resolutions of the Congress and the complete execution of the work. Be that as it may (for the Committee never assigns reasons for its grants or refusals), Gill was officially informed that the Government Grant Committee was not prepared to recommend that the vote of £300 should be granted for 1887. The sum of £150 for the first half of 1887 was subsequently provided from the donation fund of the Royal Society.

Gill had no doubt in his own mind as to the desirability of this work, nay, its urgent need in the existing state of astronomy, and, indeed, that the results of the Paris Congress were to increase rather than diminish the urgency of that need.

His most distinguished colleagues were unanimously of the same opinion, and generous offers of pecuniary and other aid were not wanting. The late Professor J. C. Adams, Professor A. Auwers, and Herr Otto von Struve wrote strongly of the subject in no uncertain terms. Gill's one remaining difficulty was the question whether, having regard to other duties, it would be possible, without the support and sympathy of the Royal Society, to carry the work to completion. The difficulties were at last arranged. The work was carried on without external aid till 1889 September 31, when Mr C. Ray Woods was employed by the observatory, and the remaining negatives were taken by him pending the arrival of the new astrographic telescope. But the tax on Gill's private resources, which resulted from the withdrawal of the Government Grant Fund, rendered him unable to procure the Repsold apparatus which Kapteyn and he had designed. Consequently, the measurements of the plates to the single second of arc, which otherwise would have been carried out, had to be abandoned, and the work was completed with Professor Kapteyn's apparatus on the plan which had been employed for the measurement of the circumpolar plates; that is to say, with an accuracy of a tenth of a minute of arc. For similar reasons the work was not carried beyond declination $-18°$.

Digitized by Google

The equatorial stand was originally made for Gill by Sir Howard Grubb in 1879, to carry the 4-inch Repsold heliometer. This type of stand is well known, and therefore needs little description, beyond the statement that it is of the size and strength usually made by Grubb for his equatorials of 8 to 9 inches aperture.

The clockwork is placed at the head of the pillar, and is provided with Grubb's usual "mouse-wheel" slow motion in right ascension, which is actuated by an endless cord passing round the grooved edge of the disc on which the mouse-wheel is mounted. The slow motion and circle reader in declination are conveniently accessible from the eye-end.

The camera has a square wooden tube 12 × 12 inches, stiffened near its centre by a stong internal diaphragm. A strong iron plate is bolted to the flange of the declination axis, and the tube of the camera is screwed to this plate.

The rapid rectilinear Dallmeyer lens, of 6 inches aperture and 54 inches focus, is mounted on the end of a long square tube, of half the length of the outer tube, but fitting accurately only near its two extremities. This gives a very smooth motion for focussing, quite free from perceptible shake. An index is attached to the inner tube, and, for focal reading, is referred to an ivory scale attached to the outer tube. Slow motion for focussing is provided by push-and-pull screws acting on the end of the sliding-box. The Dollond telescope of $3\frac{1}{2}$ inches aperture, belonging to an old and now disused equatorial, was utilised as a guiding telescope. The field of this guiding telescope is illuminated by a lamp, the light of which is reflected to the field of view by a small elliptical reflector in the axis of the telescope. This reflector is mounted on the extremity of a thin rod, which, by means of strings attached to cross arms, can be slightly rotated so as to modify the illumination. With red glass in front of the lens of the lamp the colour of the field is pleasant to the eye during long exposures, and comparatively faint stars can be followed without fatigue. The eye-piece of the position micrometer has a range of nearly 1° from the axis of rotation of the position circle. The brightest available guiding star within 58′ of the intended centre of the plate was selected; its position angle and distance from that centre were computed; the micrometer set to that position angle and distance, so that when the telescope is set by the circles to the declination and hour angle of the centre of the plate, the star is found in the centre of the field of the eye-piece.

Instead of spider-lines the micrometer is provided with a flat piece of watch spring perforated near one rounded extremity with a small hole subtending an angle of about 30″. The image of the guiding star is kept by means of the slow motion handles in the estimated centre of this hole during the exposure of the plate. Special brass adapters were made at the Cape, and by means of these the telescope was attached to the square wooden tube.

The second Dallmeyer rapid rectilinear lens, of 6 inches aperture and 5 feet 9 inches focus, was mounted on a brass tube firmly attached to the cast-iron centre piece of the tube of the Nasmyth telescope. The lenses were mounted in a brass draw tube with a focussing scale. The dark slide thus required no focussing adjustment, and rested simply on three points on the butt end of the telescope, one rounded point entering a hollow cone, another a radial V-shaped groove, the third resting on a plane. The slide was pressed against these points of support by three spring-clips.

For the guiding telescope the object-glass of the now disused Dollond transit instrument was utilised. Its aperture is 5 inches and focal length 10 feet. The tube is of tinned sheet iron, but the support of the cell of this object-glass is attached to that of the Nasmyth telescope, and the butt ends of both telescopes are firmly attached to each other. The illuminating arrangements were similar to those employed in the first apparatus already described, but intersecting spider-lines were used for guiding instead of a small hole in a piece of watch spring. The Nasmyth lens was generously presented to Gill by the late Mr James Nasmyth, of steam-hammer fame, to couple with the Durchmusterung work the photography of stars fainter than $9\frac{1}{2}$ magnitude. The field of sharp definition does not exceed 2° square, but it was intended, when the instrument in question was designed and erected, to procure a picture of that area central with each of the Durchmusterung plates, and having (since the exposure as well as the atmospheric conditions would be identical) a definitively increased range of magnitude, depending on the increased light-grasp of the 9-inch object-glass over that of the 6-inch Dallmeyer lens. A discussion of the two series of plates thus obtained would certainly have led to increased knowledge of the law of stellar distribution according to magnitude. But when the International Congress had decided upon the work now in progress, and the Royal Society declined to continue their support of the Photographic Durchmusterung, it was considered no longer necessary to continue the work with the Nasymth lens. The lens itself was subsequently utilised for rendering the rays from a source of light parallel, in the process of impressing the image of the réseau on the sensitive plate previous to exposure of the latter, in accordance with the International programme.

Digitized by Google

It was hoped that the new Dallmeyer lens of 6 inches aperture and $5\frac{3}{4}$ feet focus would prove better than the original one, but not only was its field of sharp definition more limited, but the stellar images were less sharp, and longer exposure was required to obtain measurable images of stars of a given magnitude. When Mr Dallmeyer learned that the second lens was inferior to the first, he kindly repolished the original lens, and the second lens was returned to him. The definition of the first lens, originally very good, was further improved by repolishing, and finally all the plates taken with the second lens were rejected, and the corresponding areas were rephotographed with the shorter focus lens.

For working with the repolished lens, the sliding box for focussing was removed, the lens was attached to one end of the wooden square tube, and the plate-holder and focussing arrangements of the Nasmyth telescope were fixed to the other end of it. The plan worked very satisfactorily, but indeed the original wooden tube never gave any trouble, and preserved its collimation, relative to the small guiding telescope, with surprising constancy.

The first exposure of the definitive Durchmusterung plates was made on the 15th of April 1885, with the original Dallmeyer lens. The work was commenced at the South Pole and continued to declination $-57\frac{1}{2}^\circ$.

In November 1886 the equatorial stand used up to this time (viz., the stand of the 4-inch heliometer) was dismounted from its previous site, and remounted in the portable observatory which Gill had used during his observations of Mars at Ascension Island in 1878. The new Dallmeyer lens, with the other apparatus, was fitted to the stand in its new site—the dome in which the earlier part of the work had been done being too small for the Nasmyth and 5-inch Dollond telescopes.

With this apparatus the work was completed to declination $-49\frac{1}{2}^\circ$.

Till October 1887 the exposures had been entirely made by Mr C. Ray Woods, but from this date the services of Mr Henry Sawerthal were engaged, so that the work might be continued throughout the whole, or nearly the whole, night.

Early in April 1888, the original lens (repolished) was received from Mr Dallmeyer, and was re-erected in its original site on a new equatorial stand very similar to the 4-inch heliometer stand. This mounting was made by Sir Howard Grubb for the 6-inch telescope, belonging to the observatory. The photographic work of the Durchmusterung was now carried out simultaneously in both observatories, Mr C. Ray Woods, with the original Dallmeyer lens, taking the zones -34° to -19°, and Mr Sawerthal continuing the zones from -50° to -34° with the new Dallmeyer lens till the end of 1888.

Finally, the whole of the area from -58° to -33°, taken with the new Dallmeyer lens, was rephotographed with the original (repolished) Dallmeyer lens from November 1889; the work was completed in December 1890, with the exception of a few plates which were afterwards rephotographed at the request of Professor Kapteyn.

Thus, the whole of the plates definitively used for the catalogue were taken with the shorter focus Dallmeyer lens either in its original or repolished condition.

The instrument devised by Kapteyn for measuring the plates is shown in the following figure.

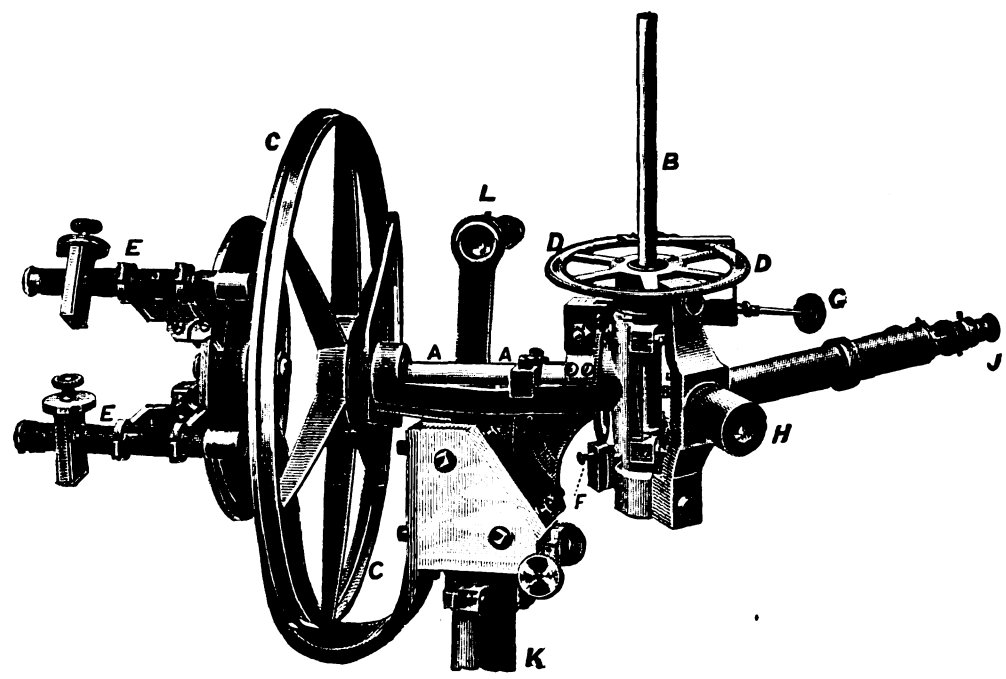

Its construction is based on the fact that if an astrographic plate is placed at a distance from the eye equal to the focal length of the lens with which the plate was taken, and with the film on the side of the plate furthest from

Digitized by Google

the eye, it is then possible to cover all the stars in the sky by their corresponding images on the plate. Therefore, if for the eye is substituted an instrument by which spherical co-ordinates are measured in the sky, it must be possible to measure these co-ordinates as well on the plates as on the sky itself. There is of course one condition to be observed depending on the *finite* distance of the plate, and which is not required in the case of an ordinary equatorial telescope, viz. that the three axes—the polar axis, the declination axis, and the optical axis of the telescope—must all intersect in one and the same point. The distance of the object-glass from this point must also be small. Since the astronomer has the portion of the sky under observation in the shape of a photograph in his own laboratory, it is of course open for him to place his imaginary observatory in any latitude. Obviously the most convenient one is the latitude of the equator, when the polar axis of his equatorial will be horizontal—for every plate can then be observed in the horizon, and may even be mounted on a fixed frame, and all plates be mounted in the same site and measured, when of different declination, by simply rotating the apparatus about the vertical axis K. The hour circle C is divided to 10 seconds of time; the right ascensions were read off by estimation to single seconds. BB is the declination axis, DD the declination circle; the latter is used simply as a setting circle and is read by a vernier to single minutes of arc. The actual declinations are read from a glass scale in the common focus of the object-glass and eye-piece. The eye-piece of the telescope has a power equivalent to 23 diameters, and an excellent flat field corresponding to 67′ of arc. The glass scale has a single line on which the pointings in R.A. are made, and at right angles to this are 66 lines, one minute of arc apart. The scale proper is divided into 60 parts easily readable by the prolongation of each 5th line and the number attached to every 10th line. Three division lines below zero, and three beyond 60 arc, are employed for overlapping parts of two contiguous zones.

It is unnecessary here to go into further instrumental details; for these the reader is referred to Kapteyn's detailed account of them, *Cape Annals*, vol. iii. pp. 6–19. The great principles which guided Kapteyn's work were to employ methods tending to freedom from mistakes either of observation or of reduction, and to quickness in the reduction and final arrangement of the work, coupled with adequate precision in the co-ordinates and magnitudes. It was intended from the beginning to arrange the whole on the general plan of Argelander's Durchmusterung, that is to say, to publish the catalogue in zones of one degree in breadth. The means for so doing are best given in Kapteyn's own words:—

As the focal distance of the photographic telescope is about 137 cm., the plates were mounted on the same pier that carried the measuring apparatus, at a distance of 137 cm. from the point of intersection of the axis, and at 125·5 cm. from the objective of the telescope.

Small motions are provided by which the relative positions of the two plates may be changed at will; by means of these the corresponding star images on the two negatives were brought nearly, but not quite, to superposition, so as to appear in the telescope like double stars, and thus true star-images were at once distinguishable from the accidental specks on the plates.*

The frame rests on three foot-screws and can be rotated round a horizontal and a vertical axis. The amount of rotation about the latter is read off on a distant scale by means of a small telescope attached to the frame.

In the beginning we worked with a single plate-holder. This, however, caused some serious inconvenience, for, as two measures have been always made, and the first and the second measurement were always made by different observers, this involved a change of observer at the very irregular hours at which the first observation of the plate was finished. Likewise, after the end of the second observation, no new plate could be begun before it had been inserted in the frame and had been carefully oriented.

All this interfered very seriously with a strictly regular and economic arrangement of the work.

A second frame-holder was, therefore, mounted by the side of the first, and a corresponding second microscope was introduced for the reading of the hour circle. Two plates could thus be oriented before the beginning of the day's work, and all that had to be done, in order to pass from the one to the other, was to rotate the whole instrument about its vertical axis till a determined scale reading, carefully noted in orienting the plates, was obtained in the telescope L. At the same time the observer at the hour circle had to change his place from one microscope to the other.

The sliding focussing tube of the telescope bears a projecting strip of steel, against which butt the end of two screws in the fixed tube of the telescope. By loosening one of these screws and tightening the other a small rotation can be given to the ocular end. The hour line is thus easily set at right angles to the declination axis. In order to avoid the necessity for any correction of the observed right ascensions depending on the reading of the declination scale, this orientation of the hour line was made with the utmost care and was very often verified in the course of the work. As far as I can remember, the orientation was but once found sensibly in error, in consequence of which a small correction depending on the scale reading had to be applied to the work of a certain number of days.

The first condition to be realised is that the plates shall be perpendicular to the line joining the centre of the plate with the point of intersection of the axis of the apparatus. Of course several methods are available to secure this end, but as the true centre of the plate (viz., the point where, in the photographic telescope, the perpendicular from the optical centre on the plate meets this plate) was not very accurately known, I found the following very rapid method quite as good as any other more refined one. A couple of plates being inserted in the frame and having been lighted up from behind by means of the illuminating lamp, a copper wire of exactly the length of half the side of the plate was hung over the middle of it, so that its free end indicated the geometrical centre of the plate, which coincides approximately with the nominal centre. The telescope of the measuring apparatus was then directed to this end; after that the light behind the plates was extinguished and the eye put vertically above the centre of the

* Duplicate photographs were made of each area—this was a part of Gill's original plan to enable faint star-images to be distinguished from dust specks or other photographic faults.

Digitized by Google

objective. The plate acting as a mirror, an image of the eye was seen, which, by a rotation of the vertical axis of the plate-holder, was brought centrally on the copper wire. Putting now the eye in a horizontal position relative to the centre of the objective, the image of the eye, the centre of the image of the objective, and the end of the copper wire were brought on one horizontal line by means of the foot-screws of the frame-holder. This done, the verticality of the plate is evidently obtained.

The second condition to be fulfilled is, that the distance of the plates from the intersection of the axis of the measuring apparatus shall be equal to the focal distance of the photographic telescope. The ocular scale has been so made that one part corresponds very nearly with one minute of arc on the plate when at the correct distance. The correspondence, however, is not absolute, and had it been so when the observations were first begun, it would still have been in error after the repolishing of the objective of the photographic telescope in 1887, which slightly changed the focal distance.

At all times, however, the difference has been small enough to make it permissible to reduce it to zero (which, of course, is most essential for the convenience of the reductions), by slightly altering the distance required by strict theory. In fact, therefore, the distance of the plates was so regulated that the difference in declination of two widely separated stars, as measured in minutes of the ocular scale, coincided perfectly with its known value.

As soon as the distance fulfilling this condition had been once thoroughly ascertained, a rod was made of the required length by the aid of which the plates could at any time afterwards be brought back to the required position with the utmost ease.

It is easily demonstrable* that, with the method of orientation presently to be described, if the error in distance be a pth part of the whole $\Delta\alpha$ and $\Delta\delta$, the co-ordinates of a star relative to the centre of the plate, expressed in degrees, the error introduced into the results, expressed in degrees, will be of the order of the very small quantities—

$$\frac{1}{p}\frac{1}{p}\Delta\alpha\,\Delta\delta \text{ for the right ascensions, and}$$

$$\frac{1}{p}\frac{1}{p}\Delta\alpha^2 \text{ for the declinations,}$$

where $p=57^{\circ}\cdot 296$.

The error in right ascension is too much mixed up with other small errors to become noticeable; the error in declination proved nearly inappreciable, never exceeding $0'\cdot 1$. Besides this, the error was all but absolutely eliminated in both co-ordinates by the method of reduction in which the corrections varied from zone to zone of 1° in breadth, and in every zone, where necessary, slightly with the right ascension.

Both the operation—the regulating of the verticality and of the distance—have only to be made once for every belt of plates of constant declination. From time to time, however, it was ascertained that no displacement had taken place.

As I wished the observations to give at once mean right ascensions and mean declinations for the equinox $1875\cdot 0$, the point to be kept in view in this orientation is at once evident.

If we imagine for a moment the plate under consideration surrounded by all the other plates, forming together a complete set of photographs of the whole sky, and these put together so as to form a regular polyhedric surface, with the intersection of the axes of the measuring apparatus as a centre, and giving, as seen from this point, an accurate representation of the firmament, then it is evident that,† in order to make the instrument give for any couple of stars the actual differences of mean right ascension and declination for 1875, all we have to do is to make the hour axis pass through the mean position for 1875 of the pole on this polyhedric surface.

The reverse, too, holds, *i.e.* the apparatus is oriented as soon as it gives the correct result for the difference in right ascension and the difference in declination for a couple of stars, chosen arbitrarily.

This being premised, the way in which the orientation is performed will be readily understood. First, the reading of the declination circle is made to correspond to the declination of the centre of the plate; then the instrument is turned about the vertical axis till the telescope points this centre. As for our plates, the accurate place of this centre is not visible; we thus get only a first approximation for the setting of the instrument. Now, taking two stars nearly on the same parallel, but widely apart in right ascension, the mean positions of which for 1875 are accurately known, the instrumental differences of right ascension and declination are determined. If these prove to be in accordance with the known differences, then the plate and the apparatus are perfectly oriented. If not, then, from the outstanding errors, we may compute at once the amount of rotation to be given to the instrument about the vertical axis (which, with the declination axis in a vertical position, can be read off by means of the ocular scale) and to the photograph about its centre, in order to make the adjustment perfect.‡ A small table in which, for every degree of declination, the corrections to be made for errors of $1^{\text{sec.}}$ and $1^{\text{min.}}$ respectively in the difference of right ascension and declination of two stars $1^{\text{min.}}$ apart in right ascension reduced the work of orientation to a minimum.

The orientation proper being completed, a known star was pointed, and by displacement of the microscope the reading of the hour circle was made to agree exactly with the mean right ascension for 1875 of the star. This being done, the circle readings will evidently give at once the actual mean right ascensions for 1875 for all the stars of the plate.

It was found in practice that the identification of the stars, together with the orientations, could be generally made in about ten minutes.

It has been already stated that two plates were used in the observations, one in front of the other. By a preliminary examination all the plates available for the same region of the sky, after having been thoroughly cleaned on the glass side, and dust having been removed from the film by means of a soft brush, were compared, and the two best chosen for use. Of these two, in case of the slightest differences, the one on which the images were densest was employed to act as a *check* plate, to be mounted in the plate-holder farthest from the measuring apparatus; the other, to be mounted in front, was employed as the measuring plate. The observations were made in a darkened room, and the plates illuminated from behind by a powerful lamp. Care was taken, of course, to protect the plates as much as possible from the heat of the lamp.

The power used on the telescope being, relatively speaking, a low one, the difference in focus of the images on the two plates

* By means of the formulæ given, *Bulletin du Comité Permanent de la carte du Ciel*, i. p. 426.

† Discarding all considerations of instrumental errors and of differential refraction and aberration.

‡ The index error of the declination circle being once ascertained, we may as well make: 1st, difference of instrumental declination of two stars equal to *known* difference; 2nd, circle reading of one of the stars + index error equal to known declination. This method, too, was often used, especially in low declinations.

Digitized by Google

and of the images on the same plate at different distances from the centre, was hardly perceptible; those on the check plate being generally the denser ones, but appearing somewhat fainter by being looked at through the measuring plate, the corresponding images of the stars appeared as nearly equal as possible. This proved to be a great advantage, not only in regard to the number of stars certainly recognisable as such, but especially in regard to the reliability of the estimates of diameter of the fainter stars; for the estimation of the diameter of these stars proves the more certain the more nearly the two images approach equality.

The plates are square, with a side of about six degrees. As, however, the belts of plates lie generally five degrees apart, only 5 zones,* each somewhat over a degree in breadth, were measured on every plate, beginning with that nearest to the equator. Thus, for instance, the first belt of plates of which the centre lies at $\delta = -21^\circ\ 30'$. On these plates were measured the five zones, -19°, -20°, -21°, -22°, -23°. For the observation of the first, the zero of the scale was brought to coincide exactly with $-19^\circ\ 0'{\cdot}0$ (mean declination for 1875·0) on the plate, by bringing a star of this zone, of which the declination for 1875·0 is known, exactly on that division of the scale that corresponds to the minutes and tenth of minutes of its declination. This done, the slow motion in declination was not further touched, and a sweep was made within such limits of right ascension that an overlapping of the consecutive plates of from a half to a couple of minutes of time was secured, the overlap being taken the larger, the poorer the plate, in order to be sure that a sufficient number of stars would be common to two successive plates.

In making the sweeps, every star, of which both images could be distinctly seen, was observed between $-3'$ and $63'$ of the scale, in the order in which they presented themselves at the hour line. After the completion of the first zone, the telescope was displaced 60 divisions of the ocular scale, the setting was verified by another known star, the second zone observed, and so on.

Two observers have always worked together, one at the ocular, one at the microscope of the hour circle. A clerk wrote down all the numbers called out by the two observers in ledgers carefully prepared for the purpose, which will be presently described. The observer at the ocular estimated the diameter, read off the declinations on the scale, and made the pointings for right ascension. These were read off by the observer at the microscope.

The diameters were estimated in tenths of a minute of arc. This unit, however, being found too large in practice, was subdivided into three by the signs − and +, so that, for instance, the numbers -2, 2, $+2$, -3, 3, $+3$, . . . indicate diameters of $0'{\cdot}17$, $0'{\cdot}20$, $0'{\cdot}23$, $0'{\cdot}27$, $0'{\cdot}30$, $0'{\cdot}33$, . . . respectively. For diameters below -2, these estimates cannot be considered as actual measurements, for the reason that the fainter stars on the plates differ generally but relatively little in diameter but considerably in density. For these stars the scale was prolonged downward in such a way that -0 represents the faintest stars on the plates, while 0, $+0$, -1, 1, $+1$ represent intermediate shades of density between these and the stars -2, which may be generally considered as the first stage really measured.

The declinations were estimated to tenths of the minute.

The pointings for right ascension were made by bringing the hour line on the centre of the star's image on the measuring plate.

Every plate was observed twice. Only in exceptional cases, which will be referred to further on, three or more observations were made.

The first observation of every plate (at the ocular) was made, in the beginning of the work, by Mr Speckman; at a later epoch by Mr de Vries. Both these gentlemen were wholly unfamiliar with any work of the kind before they began to take part in the observations, but they acquired considerable skill in it in a remarkably short time, the former, however, always finding some difficulty in making wholly consistent estimates of diameter (or rather density) of the fainter stars.

In these first observations the whole breadth of the zone of 1° was observed at once, care being taken to observe the stars as nearly as possible in the order of their right ascension. In the second observations, especially towards the end of the work, and in order still further to diminish the danger of leaving stars out, the zone was mostly observed in two halves, the one below, the other above 30′.

The second observations were made quite independently from the first. They were written out for every star in a column arranged for the purpose in the ledgers, alongside the first observation of the same object. In order to obviate the danger that the clerk might unwittingly copy numbers of the first observations as well as to prevent errors for wrong hearing, it has been the invariable custom for him to call out all the numbers which he wrote down. Every number was therefore called out twice, once by the observers and once by the clerk, and it is remarkable how readily any difference between the two is caught by the ear, even at those moments at which the observer is hardly aware of the repetition of his own words. The result has shown that the danger adverted to has been quite overcome by these means, for, in the whole series of observations from -19° to -38°, but two cases have been found where comparison with other catalogues and subsequent verification on the plates has shown the same error to occur in both observations.

When a star, overlooked in the first observation, was found in the second, it was written down in a third column, the column of "new" stars.

As soon as the second observation of a plate was completed, the two observations were carefully compared; all the differences in diameter, declination or right ascension which seemed to exceed the legitimate limits, and all the stars brighter than -0 occurring in the first observation, but not in the second, were noted. All these, together with the *new* ones, were then reobserved and errors corrected. *The second observations, as well as all the revisions, have been invariably made by myself.*

It is unnecessary here to follow further the process of final reduction—it will be obvious that the final corrections were very small, and could be derived readily from comparison with the places of numerous well-known stars on each plate.

The magnitudes were computed from the observed diameters, employing as standards the magnitudes of Schönfeld's Durchmusterung for the first zone of plates ($\delta = 21\frac{1}{2}^\circ$), and for the rest those of Gould's Zone Catalogue.

Means were computed separately for the stars of the diameters 0, 1, 2, 3, 4, 5, 6, etc., and these afterwards condensed into 3 to 5 normals, from which the two constants in the definitive formulæ of reduction

$$\text{Magnitude} = \frac{B}{\text{diameter} + C}$$

were computed.

* On the plates having their centre at $-35\frac{1}{2}^\circ$ only *four* degrees were measured, the distance of this belt of plates to that of $31\frac{1}{2}^\circ$ being only four degrees.

Digitized by Google

It is impossible within the limits of this history to enter into a full account of the great work thus carried out by Kapteyn. The catalogue itself contains the magnitudes, right ascensions, and declinations of 454,875 stars, of which 481 are in the overlapping zone of declination $-18°$; the others lie between dec. $-19°0'$ and the South Pole. This number considerably exceeds that (431,760) catalogued by Argelander and Schönfeld for the whole of the rest of the sky. The average number of stars in the *C.P.D.* is 32·66 per square degree; this figure ranges from 8 to 154 in different parts of the sky. The right ascensions are stated to the $0^s·1$ and the declinations to $0'·1$. The probable errors are :—

Declinations.	Probable Errors in R.A.	Probable Errors in Dec.
	s	′
$-18°$ to $-58°$	$\pm$ 0·28	$\pm$ 0·044
-58 to -86	$\pm$ (0·157 + 0·764 sec δ)	$\pm$ 0·056
Polar plate	$\pm$ (0·0353 sec δ)	$\pm$ 0·0127*

The probable errors of the magnitudes it is more difficult to estimate—indeed, until a better definition of photographic magnitude has been reached, it is impossible to pronounce a definite opinion as to the systematic magnitude-errors of the catalogue.

The accidental probable errors of the magnitudes founded (in the way above described) on comparison with the magnitudes of Gould's zones, and computed from their independent determination on different plates, are as follows (*C.P.D.*, vol. i. p. 57) :—

				Mag.
Mag.	7·0	to	7·9	$\pm$ 0·09
	8·0	to	8·4	$\pm$ 0·04
	8·5	to	8·9	$\pm$ 0·08
	9·0	to	9·4	$\pm$ 0·085
	9·5	to	9·9	$\pm$ 0·10

As to the completeness of the catalogue, Gill in his introduction to the *C.P.D.*, vol. i. p. xxiii., writes :—

Notwithstanding the care that was employed to obtain uniformity in the results, the actual plates are far from perfect in this respect. The most that can be said is, that probably every catalogued plate shows every star which Argelander would have considered it essential to include in a Durchmusterung similar to his own, with the exception perhaps of a very few red stars of the fainter class. It is, in fact, impossible to solve the practical problem, "*to photograph all the stars in the sky to a given order of magnitude, without also photographing stars fainter than those required.*" . . . Accidental circumstances, over which the observer has no control, such, for example, as the variations of definition, the presence of invisible haze, etc., will always render the problem practically insoluble.

The result of Kapteyn's final discussion (*loc. cit.*, vol. iii.) is :—

It may be safely laid down as a rule that, if from the magnitudes as given in the catalogue for the faintest stars on any one plate we subtract $0·3^m$,† we will obtain the limit of photographic magnitude to which the stars of the catalogue are practically complete. . . .

It is an advantage of photography that a generally reliable limit of magnitude can be at once assigned for every separate region covered by the plate. If this criterion is applied to the *whole* of the plates of the *C.P.D.*, it will be found that we may safely assume *the whole catalogue* to be complete to stars of photographic magnitude 9·2. There is but one exception—viz., the plate No. 246 ($-35\frac{1}{2}$, 2^h 37^m 54^s). For this plate the faintest stars measured are photographically of the magnitude 9·23, and the limit of certain completeness would thus be 9·03. However, considering that the images on the check plate are here sensibly denser than on the measuring plate, and further that not a single star of Gould's *Zone Catalogue* is missing on the plates, there seems reason to believe that here, also, the limit of magnitude to which the stars have been *completely* observed will not prove materially below 9·2.

Another question, of course, is—To what limit of magnitude would the plates be found complete, were the magnitudes of the *C.P.D.* reduced to a homogeneous set of photographic magnitudes of the whole sky? All things considered, I confidently believe that the *C.P.D.* will be found practically complete, in or near the Milky Way, to stars which, in the scales of Gould, Schönfeld, and Thome, are of the magnitude 9·5, and for the rest of the sky to stars actually equivalent to these. The reason why this statement cannot be put into a simpler form lies, of course, in the systematic differences between photographic and visual magnitudes, depending on the galactic latitude (see *C.P.D.*, Introd., vol. i. art. 7). Whether these discrepancies are caused by errors of the visual estimates, or by difference between the colours of stars in different galactic latitudes, is here, of course, irrelevant.

The whole of Kapteyn's work is marked by extraordinary thoroughness and accuracy. He discusses (*C.P.D.*, vol. i. p. 23, and vol. iii. pp. 25–29) the systematic errors of the magnitudes depending on the position of the stars on the plates by counting the stars in different regions of a large number of plates, and comes to the

* The polar plate was measured accurately in rectangular co-ordinates with the Repsold machine of the Leiden Observatory, which was kindly lent for the purpose. Kapteyn adopted this course because he wished in some way or another to get a fair idea of the accuracy of the positions which it would be possible to arrive at with such plates as those which were used for the *C.P.D.* The probable errors of the polar plates were derived from comparison with the places of the Cape Circumpolar Catalogue of 1891. This fact increases the regret that, from want of funds (see p. li), an instrument capable of measuring the plates rapidly in R.A. and Dec. with an accuracy of $\pm 1''$ could not be secured, as the plates were quite capable of giving results of that accuracy.

† A later note puts this figure at $0·2^m$.

Digitized by Google

satisfactory conclusion *that for the plates taken with the lens in its original condition, as well as for those taken with the repolished lens, the systematic errors of the magnitudes depending on the position of the stars on the plates must be all but insignificant.*

Besides the magnitudes, Kapteyn gives in the catalogue references to all catalogues of precision in which the star has been previously observed. The precessions for twenty-five years are given in a very convenient form on the margin of each page, and, as an independent astronomer once told the writer, "form the most convenient approximate precession tables for Southern stars that exist." For the zone $-86°$ the places are given for 1850, 1875, and 1900, and the precessions for 1875 and 1900. For zones $-87°$ and $-88°$ the star places are given to $0'{\cdot}001$, and the precession as for zone $-86°$. For the zone $-89°$, accurate places are given for 1875·0, and approximate places for each tenth year from 1900 to 1950.

The work has been subjected to a very complete and thorough revision. Kapteyn in his introduction gives the following lists:—

I. List of 983 stars contained in catalogues of precision and missing on the plates.
II. List of 8 stars in Schönfeld's *Durchmusterung*, and missing on the plates.
II bis. List of 309 stars, 9·0 mag. or brighter, in the first two parts of Thome's *Cordoba Durchmusterung*, and missing on the plates.
III. List of 20 stars, photographically 9·0 or brighter, contained in *C.P.D.*, missing in Schönfeld's *Durchmusterung*.
III bis. List of 74 stars, 9·2 mag. or brighter, contained in the *C.P.D.*, and missing in the first two parts of Thome's *Cordoba Durchmusterung*.

Kapteyn began the work of measurement on 1886 October 18, and completed it on 1898 February 1. The completed Durchmusterung was published in three large volumes of the *Annals of the Cape Observatory*, vols. iii. iv. and v. (corresponding to vols. i. ii. and iii. of the *C.P.D.* in the years 1896, 1897, and 1900 respectively).

Probably no work of the kind of like extent has ever been issued so free from typographical and other errors. It is impossible to overestimate its value to southern sidereal astronomy, and still more impossible to adequately express the gratitude which is due to Kapteyn for his self-sacrificing labours.

Gill, in his Preface to vol. iii. of the *C.P.D.*, has endeavoured to express his own sense of obligation as follows:—

> But it is my colleague and friend, whose name appears on the title-page, to whom I am under the deepest obligation. At a time of great stress and discouragement he lifted from my shoulders a load of responsibility by his noble and spontaneous offer to undertake the measurement of the plates, the computation of the results, and the formation of the catalogue. He realised from the first the advantages and possibilities of the work, as well as the need for it in the present state of science, and he devoted over twelve of the best years of his life to the fulfilment of his undertaking. I now realise that my many other duties, and the difficulty of obtaining adequate assistance, would probably have compelled me to defer a great part of the work of the catalogue to the years of my retirement from official life, and might even have prevented its completion.
>
> I feel sure that Kapteyn has not laboured in vain, and that astronomers will duly appreciate what he has done for their science.
>
> Such language on the part of one joint author in regard to the work of the other is perhaps unusual. It can only be justified by the immensely greater share, and the distinctive character of the work done by Kapteyn; and how much greater has been his share than mine can only be appreciated by those who are acquainted with the technicalities of similar work.

In 1902 the Royal Astronomical Society marked its high appreciation of the value of Kapteyn's work by awarding to him its Gold Medal.

But probably the most valuable result of the *C.P.D.* to science is the fact that its preparation first directed Kapteyn's mind to the study of the problems of cosmical astronomy, and thus led him to the brilliant researches and discoveries with which his name is now and ever will be associated.

THE REVISION OF THE CAPE PHOTOGRAPHIC DURCHMUSTERUNG.

It is intended that vol. ix. of the *Cape Annals* shall ultimately contain the following, viz.:—

Part I. Examination of questions which have arisen from a comparison of other star catalogues with the *C.P.D.*
Part II. Observations of variable stars.
Part III. Errata in Southern Star Catalogues.
Part IV. Discussion of proper motions suspected by Kapteyn.
Part V. Revision of the magnitudes of the *C.P.D.*

Of these parts, I., II. and III. are published, and most of the observations in connection with Part IV. have been made, although the results have not yet been fully discussed; Part V. has not yet been undertaken.

Part I. consists, in the first place, of a revision of all Kapteyn's lists, I., II. II bis., III., and this is due mainly

Digitized by Google

to the labours of Mr R. T. A. Innes.* Indeed, except for a few observations made by Mr Finlay (marked F), the whole of the revision work contained in the volume in question is due to Mr Innes. Besides the revisions of Kapteyn's lists, Part I. contains the following revisions :—

Nine stars contained in the Cape Catalogue for 1865, but missing in the *C.P.D.*; all proved to be below 9·5 magnitude. Thirty stars in Second Washington Catalogue, 1875, missing in *C.P.D.*, all of which are fainter than 10th magnitude, except 1948, which, according to Innes (7 nights), has magnitude 9·3.

Seven stars in Madras General Catalogue, 1875, missing in *C.P.D.*, all fainter than 9·3, except two, both of which are in error in Madras Catalogue.

References to 48 *C.P.D.* stars contained in Second Washington Catalogue.

A valuable series of remarks on lists I. and II. bis by Dr Ristenpart.

Part II. contains, in the first place, a revision of Kapteyn's lists of 145 suspected variable stars published *C.P.D.*, vol. i. (93); *Astr. Nach.*, Bd. 142, *c* 76; and MS. lists from Kapteyn, dated Groningen, 27th August 1895 and 3rd December 1896.

A good many of these stars were found to be variable elsewhere before Innes could take up their examination at the Cape. No less than 41 of these have turned out to be true variables. Innes' first table, p. 7 B, shows the particulars of his observations on each of these 145 stars which are not ultimately proved to be variable. In some instances observations (all of which are recorded) were made on 40 or 50 nights, without definite proof of variability; for, as Innes very justly remarks :—

"It is easy to suspect a star of variability—as witness the long lists published by the Cordoba Observatory in the introductions to each volume of its Durchmusterung—but proof is a different matter, and becomes in many cases very onerous. Nothing would have been easier than to have labelled all the stars missing in the *C.P.D.* as 'suspected variables' and left others to find the reasons for discordances."

These remarks seem necessary, as the credit for discovery is not always correctly assigned. In this regard mention may be made of the star C.Z. XV. 3719. If the observer had been content with four months of the observation in 1896, or five months in 1897, it would have been said that the star is not variable, and its absence from the *C.P.D.*, as in the case of still many other stars, would have been inexplicable. It might therefore be suggested that the ordinary formula "suspected by . . . , confirmed by . . . ," should be replaced by "found by . . . , previously suspected by . . . "

Whenever a star was *proved* to be variable it was transferred to a separate list containing, besides the 41 variables resulting from Kapteyn's list of "suspected variables," 32 otherwise known variables.

These stars have been observed on from 28 to 228 nights each, the separate results being given for each night and the periods discussed, in many cases with curves showing the variation of magnitude.

Next follows a list of 104 stars drawn from various sources and put on Innes' working list because they had been suspected of variability or some other peculiarity. The details of the observations are given.

The next list consists of results of observations of 190 stars marked ? or × in the *C.P.D.* Of those marked ? all actually exist except 17, of which a list is given. The results of examination are given for each of the remaining 173 stars. The stars marked × (denoting suspected nebulosity) sometimes prove to be double or triple stars, in one case a very red star.

Then follows a list of 160 coloured stars observed during the revision of the *C.P.D.*, and finally "statistical counts of stars to magnitude 9·0 in the *C.P.D.*"

Part III. gives the known errata in Southern Star Catalogues. A large number of these errata were detected by Kapteyn in the course of his work on the *C.P.D.*, and a complete list of them was forwarded to the Cape. Innes has added to these lists other errors which had been previously published, or which had at different times been discovered at the Cape. Dr Ristenpart, when in charge of the *Bureau des Commission für die Geschichte des Fixsternhimmels*, most kindly revised the proof-sheets and added many errata only previously known to himself.

* Mr Innes, before he joined the staff of the Cape Observatory, was a merchant in Sydney, Australia, but was well known to astronomers as an amateur devoted to the discovery and observation of double stars. He wrote to Gill offering his services as an assistant at the Cape Observatory; but there was no vacancy in that capacity, and Gill could only offer him a temporary post as secretary, librarian, and accountant. That post was afterwards put on the establishment under the title of clerical assistant. Mr Innes performed all the duties of that office in the most satisfactory manner, but devoted every moment of his spare time, day and night, to pure astronomical work, most of which is mentioned in the pages of this history. On the conclusion of the Boer War it was determined to found an observatory at Johannesburg, which, in the first place at least, was to be devoted to meteorology; but it necessarily included a time department which, in energetic hands, could be developed into a regular astronomical observatory. With this end in view Gill recommended the appointment of Mr Innes to the post, and he has filled it with marked success and distinction since 1903 March 31.

Digitized by Google

The catalogues for which all these errata are given are:—

	Designated		Designated
Stone's Cape Catalogue for 1880	S.	Taylor's Madras Catalogue (Downing), 1835	
Cordoba Zone Catalogue	C.Z.	Schönfeld's Bonner Durchmusterung −19° to −23°	SD.
Gould's Argentine General Catalogue	G.	Porter's Cincinnati Zone Catalogue	C.
Gilliss' South Circumpolar Catalogue, 1850	*g.*	First Washington Catalogue (3rd edition, Frisby)	W.
Gilliss' Catalogue	g.	Bonn Beobachtungen, vol. vi., 1867	b.
Thome's Cordoba Durchmusterung	Th.	Kam's Catalogue from *Ast. Nach.*, vols. i.–lxvi.	k.
British Association Lalande's Catalogue, 1800	l.	„ „ „ *Ast. Nach.*, vols. lxvii.–cxii.	K.
Paramatta Catalogue (Brisbane), 1825	p.	Cape Catalogue for 1850	c.
Argelander's Südliche Zonen (E. Weiss), 1850	d.	Rümker's Preliminary Cat. of Southern Stars	r.

The volume concludes with a short list of additional notes and errata applicable to the Madras 1875 Catalogue, the *C.P.D.*, and other Cape publications.

A final index is given to published lists of errata in Southern Star Catalogues.

This work of Mr Innes was from first to last a labour of love, carried out by him with conspicuous energy and success.

RESEARCHES ON STELLAR PARALLAX.

The history of Henderson's discovery of the parallax of α Centauri has already been given (p. xvii) in connection with his life's work. That discovery was followed up and confirmed by the observations of Maclear with the new mural circle, which replaced the defective one originally employed by Henderson. The observations were made both "direct" and "reflex," thus eliminating the error of "zero point." The derived parallax is therefore in one sense an absolute one, but must be affected by such errors as may arise from abnormal refraction, change of latitude, or seasonal change of flexure, etc. The observations are discussed by Henderson (*Mem. R.A.S.*, vol. xii. pp. 329–372), and give $+0''{\cdot}91$ for the parallax of α Centauri and $20''{\cdot}52$ for the constant of aberration.

But previous to 1879 no systematic effort had been made in the Southern hemisphere to determine differential stellar parallax by extra-meridian methods, and all experience in the Northern hemisphere had gone to prove that the determination of stellar parallax by absolute methods offered no hope of satisfactory result. It seemed to Gill to be essential not only to continue the work so well begun by some of his predecessors, but to bring to bear upon it the most refined differential methods and to extend researches on stellar parallax to a wider range of objects. For this purpose he purchased from Lord Crawford his 4-inch heliometer, and, in conjunction with Dr Elkin, set to work to make an exhaustive determination of the parallax of α Centauri and of others of the most interesting stars in the Southern hemisphere. As already mentioned, Gill first met Mr W. L. Elkin in 1879 as a student under Professor Winnecke, at Strassburg. Elkin was then engaged in preparing his "Inaugural Dissertation" for the degree of Doctor of Philosophy at that University. The subject he had selected was the orbit and parallax of α Centauri, and he applied to Gill for any observations of α Centauri as a double star, or any meridian observations of α_1 and α_2 Centauri. When, in course of conversation, Elkin learned of Gill's purchase of the heliometer and the purposes to which it was to be applied, he expressed much interest in the programme and his keen desire to take part in such work. It was finally arranged that on completion of his curriculum, and after the arrival of the heliometer, Elkin should come to the Cape and share Gill's work. The heliometer reached the Cape at the end of December 1880 and was at once erected in an old observatory which had been built by Maclear, in 1847, to cover a small telescope by Dollond.* The necessary alterations of the building and the adjustments of the instrument had just been completed when, on 31st January 1881, Elkin arrived at the Cape. He lived there, as a guest and member of Gill's family circle, till the completion of their joint programme. He sailed from the Cape on 16th May 1883—and his work there, from first to last, was a labour of love.

The general idea in the preparation of the programme was to make such a contribution to existing knowledge of the parallax of Southern stars as could be accomplished in a series of observations extending over a period of eighteen months. It was also considered desirable that the parallax of several stars should be independently determined by both observers, employing different comparison stars in order to test the reliability of the results arrived at. The programme was finally constructed as follows:—

For observations by Gill and Elkin, α *Centauri*, *Sirius*, ϵ *Indi*.
„ „ Gill only, *Lacaille* 9352, o_2 *Eridani*, β *Centauri*.
„ „ Elkin only, ζ *Toucani*, *e Eridani*, *Canopus*.

* This observatory is described by Maclear (*Mem. R.A.S.*, xx. pp. 31–36).

Digitized by Google

In the case of α Centauri the parallax was determined not only by two observers, but each observer employed two pairs of comparison stars, so that four entirely independent results were obtained, viz. :—

	Observer.	Comparison Stars. Magnitude. a	b	Distance. a	b	Position Angles. a	b	Dates of Parallax Maxima and Minima for Distance (a—b).	Parallax.	Probable Error of Parallax.	Weight.	Probable Error of Single Observations a—b.
1	Gill	7,	7½	38″30,	30″60	323°,	142°	Mar. 7, Sept. 10	0″·747	± 0″·013	6	± 0″·114
2	,,	8,	8	6010,	5460	274°,	90°	Feb. 3, Aug. 6	·760	± {0″·013 / 0″·021}	2	± 0″·111
3	Elkin	7,	7½	6230,	4970	354°,	168°	Apr. 3, Oct. 7	·783	± 0″·028	3	± 0″·161
4	Elkin	8	8	2940,	2800	275°,	91°	Feb. 3, Aug. 6	·676	± 0″·027	1	± 0″·176

The results of series 1 and 3 depend on a large number of observations—100 and 87 nights respectively—and the probable errors attached to the results include the determination and elimination of every source of error that it is possible to conceive; the results are therefore strictly reliable within such limits as are indicated by their probable errors. According to these errors their relative weights are as 4·6 : 1; but as different comparison stars were employed, and as there is always a possibility of minute difference in the absolute parallaxes of the comparison stars, weights 6 and 3 have been assigned.

If the result of series 2 can be assumed free from any systematic error which is a function of the hour angle of observation (an assumption that is supported not only by the internal evidence of the series, but by the collateral evidence of Gill's investigations of the parallax of Sirius, ϵ Indi, and Lacaille 9352), then the probable error of this series is $\pm 0''\cdot013$, and its weight is equal to that of series 1. On the other hand, if the freedom of the series from systematic error is held to depend entirely upon the evidence furnished by the series itself, without taking collateral evidence into account, the probable error of the parallax for this series becomes $\pm 0''\cdot021$; thus its theoretical weight is higher than that from series 3. But considering that the freedom of the series from systematic error was proved only from observations made at the close of the series, the lower weight 2 has been assigned to it.

To the results of series 4 the weight 1 has been assigned, which is rather lower than, from its probable error, it should apparently receive; but this is justified by the fact that the systematic error which depends upon the hour angle of observation is considerable, and the observations for its determination were made at the end of the series instead of being distributed throughout it. With these weights the parallax of α_2 Centauri relative to the stars of comparison becomes $0''\cdot752$, and we cannot be far wrong in writing it $= 0''\cdot75 \pm 0''\cdot01$. This result renders certain the discovery made by Henderson, and confirmed by Maclear's observations, viz., that the parallax of α Centauri is a real quantity of the order of a second of arc. The mural circles of the time could hardly prove more, but now the heliometer has yielded a result which may probably be regarded as certain within 2% of its amount. The results for the parallaxes of the other stars named are quoted subsequently.

Important as these results were, experience showed that the choice of comparison stars was hampered by the limited aperture of the instrument, and a large amount of valuable time was lost during observation in recording the considerable number of scale-readings necessary with the micrometer then in use. We also found that, with the images formed by the semi-lens of a four-inch object-glass, the difficulty of observation was markedly increased if comparison stars much fainter than 7½ magnitude were employed. Also, that it was possible to change the construction of the micrometer box, and thus bisect the division of one scale by means of a pair of parallel webs which are fixed to the box; and then, by the micrometer screw with the divided head, to bisect a division on the other scale with the movable pair of webs. If the reading for coincidence of the fixed and movable webs is zero, it is obvious that the reading of the drum-head of the micrometer screw becomes a measure of the interval between the adjacent lines of the scales attached to the semi-lenses; and, if the reading for coincidence of the fixed and movable webs is not zero, the difference from zero will simply enter into the index-error and be eliminated in the mean of observations made in reversed positions of the segments.

As all heliometer measures are made in positions of the segments, which are reversed at very short intervals, and as the readings for coincidence of the fixed and movable webs of a micrometer are not liable to rapid change, the necessity for separate readings of both scales by the same movable wire disappears and a great saving of time may thus be effected. Also, instead of reading a micrometer head and writing down the number and decimals of revolutions in an observing book, it would obviously be a great gain in time and convenience and a guarantee

Digitized by Google

The catalogues for which all these errata are given are :—

	Designated
Stone's Cape Catalogue for 1880	S.
Cordoba Zone Catalogue	C.Z.
Gould's Argentine General Catalogue	G.
Gilliss' South Circumpolar Catalogue, 1850	*g.*
Gilliss' Catalogue	g.
Thome's Cordoba Durchmusterung	Th.
British Association Lalande's Catalogue, 1800	l.
Paramatta Catalogue (Brisbane), 1825	p.
Argelander's Südliche Zonen (E. Weiss), 1850	d.

	Designated
Taylor's Madras Catalogue (Downing), 1835	
Schönfeld's Bonner Durchmusterung $-19°$ to $-23°$	SD
Porter's Cincinnati Zone Catalogue	
First Washington Catalogue (3rd edition, Frisby)	
Bonn Beobachtungen, vol. vi., 1867	
Kam's Catalogue from *Ast. Nach.*, vols. i.–lxvi.	
„ „ „ *Ast. Nach.*, vols. lxvii.–	
Cape Catalogue for 1850	
Rümker's Preliminary Cat. of Southern Star	

The volume concludes with a short list of additional notes and errata applicable to the Catalogue, the *C.P.D.*, and other Cape publications.

A final index is given to published lists of errata in Southern Star Catalogues.

This work of Mr Innes was from first to last a labour of love, carried out by him with and success.

RESEARCHES ON STELLAR PARALLAX.

The history of Henderson's discovery of the parallax of α Centauri has already been tion with his life's work. That discovery was followed up and confirmed by the obser new mural circle, which replaced the defective one originally employed by Henderson. both "direct" and "reflex," thus eliminating the error of "zero point." The derive sense an absolute one, but must be affected by such errors as may arise from abnorn or seasonal change of flexure, etc. The observations are discussed by Henderson (J and give $+0''{\cdot}91$ for the parallax of α Centauri and $20''{\cdot}52$ for the constant of al

But previous to 1879 no systematic effort had been made in the Southern stellar parallax by extra-meridian methods, and all experience in the Northe the determination of stellar parallax by absolute methods offered no hope c to be essential not only to continue the work so well begun by some of hi it the most refined differential methods and to extend researches on stell this purpose he purchased from Lord Crawford his 4-inch heliometer, a to make an exhaustive determination of the parallax of α Centauri a Southern hemisphere. As already mentioned, Gill first met Mr W. Winnecke, at Strassburg. Elkin was then engaged in preparin Doctor of Philosophy at that University. The subject he had s he applied to Gill for any observations of α Centauri as a c Centauri. When, in course of conversation, Elkin learned c which it was to be applied, he expressed much interest in t work. It was finally arranged that on completion of hi should come to the Cape and share Gill's work. The and was at once erected in an old observatory which h by Dollond.* The necessary alterations of the buil pleted when, on 31st January 1881, Elkin arrived family circle, till the completion of their joint work there, from first to last, was a labour of lo

The general idea in the preparation of th of the parallax of Southern stars as could b eighteen months. It was also considered d mined by both observers, employing diffe at. The programme was finally constru

For observations

„ „

„ ,

* Th

Digitized by Google

In the case of α Centauri the parallax was determined [illegible] two pairs of comparison stars, so that four entirely indepen[illegible]

	Observer.	Comparison Stars. Magnitude. a	b	Distance. a	b	Position Angle. a	b
1	Gill	7,	7½	38″30,	30″60	323°	[illegible]
2	,,	8,	8	6010,	5460	274	[illegible]
3	Elkin	7,	7½	6230,	4970	354	[illegible]
4	Elkin	8	8	2940,	2800	275	[illegible]

The results of series 1 and 3 depend on a large [illegible] the probable errors attached to the results include [illegible] it is possible to conceive; the results are therefore [illegible] probable errors. According to these errors their [illegible] were employed, and as there is always a possibility [illegible] stars, weights 6 and 3 have been assigned.

If the result of series 2 can be assumed free [illegible] of observation (an assumption that is supported [illegible] collateral evidence of Gill's investigations of the [illegible] error of this series is ±0″·013, and its weight [illegible] of the series from systematic error is held to [illegible] without taking collateral evidence into account; [illegible] thus its theoretical weight is higher than [illegible] from systematic error was proved only fr[illegible] has been assigned to it.

To the results of series 4 the weight [illegible] it should apparently receive; but this [illegible] hour angle of observation is conside[illegible] series instead of being distributed [illegible] stars of comparison becomes [illegible] renders certain the discovery [illegible] of α Centauri is a real quant[illegible] more, but now the helio[illegible] amount. The results for [illegible]

Important as thes[illegible] limited aperture of t[illegible] the considerable nu[illegible] the images forme[illegible] if comparison s[illegible] construction o[illegible] which are fi[illegible] on the oth[illegible] is zero, it [illegible] between [illegible] fixed [illegible] elimi[illegible]

ar[illegible]

[illegible] J. C. Kapteyn of Groningen, Gill [illegible] whilst engaged in his studies in the [illegible] cted with the *Cape Photographic* [illegible] stars of the Milky Way. Struck by [illegible] puter, and the opportunity of working [illegible] le Sitter, having passed the preliminary [illegible] aff in August 1897. After some general [illegible] e, Mr Sitter, *inter alia*, engaged in regular [illegible], Piazzi XIV.^{h} 212, Z. C. V.^{h} 243 (the star [illegible] of all the observations for stellar parallax [illegible] from vol. viii. part 2 of the *Cape Annals*

[illegible] BRIGHT STARS.

[illegible]'s Magnitude.)

[illegible] with the 7-inch heliometer) the reference is given to the section (§) [illegible]e 4-inch heliometer), the page is quoted.

[illegible]arallax and its [illegible]bable Error.		Adopted Parallax and Probable Error.	Annual Proper Motion.	Magnitude of Comp. Stars. α	β
		″ ″	″		
·370 ± 0·009				7·0	7·0
0·370 ± 0·010		0·370 ± 0·005	1·320	8·7	8·7
0·378 ± 0·022				7·7	8·0
0·000 ± 0·010				8·5	8·5
0·003 ± 0·035		0·000 ± 0·010	0·014	8·0	8·3
0·000 ± 0·010				8·5	8·4
0·001 ± 0·027		0·000 ± 0·010	0·018	8·0	8·0
	33	0·747 ± 0·013		7·0	7·2
	51	0·760 ± 0·013(1) 0·021(2)	3·686	8·0	8·0
	p. 69	0·783 ± 0·028	0·752 ± 0·010	7·0	7·5
	p. 81	0·676 ± 0·027		8·0	8·0
	§ 7	0·043 ± 0·015	0·043 ± 0·015	0·083	8·5	8·5
	p. 161	0·000 ± 0·019		only one	7·0
	§ 2	0·046 ± 0·017	0·030 ± 0·015	0·067	8·0	8·0
	§ 8	0·050 ± 0·019	0·050 ± 0·019	0·046	8·3	9·0
[illegible]ll	§ 9	−0·019 ± 0·010	0·000 ± 0·020	0·067	8·6	8·8
Gill	§ 6	0·130 ± 0·014	0·130 ± 0·014	0·379	8·5	8·5
Finlay	§ 13	0·021 ± 0·012	0·021 ± 0·012	0·041	8·0	6·5
Gill and Finlay	§ 11	0·000 ± 0·008	0·000 ± 0·008	0·063	7·1	6·5
Gill	§ 5	0·015 ± 0·007	0·015 ± 0·007	0·205	8·0	8·0

[illegible]uding possible systematic errors.

(2) Including possible systematic errors.

Digitized by Google

against errors to provide for printing the successive readings of the drum-head on a ribbon of paper which could be read off at leisure and be preserved for reference.

As in observations of position angle the angular separation produced in the field of view by a given change of position angle is directly proportional to the angular distance between the two objects under observation, it is clear that greater variety of slow motions in position angle should be provided than was available in the original heliometer.

In the 4-inch heliometer also no satisfactory means existed for determining the division errors of the scales, and although this was not an essential matter in determinations of stellar parallax, it became one of much importance in researches on the solar parallax and in other work for which the heliometer is well adapted.

The method of illuminating the scales by a lamp, held in the hand (or placed on a stand, the position of which, on account of the diurnal motion, had to be frequently changed) was not only inconvenient, but was detrimental to the accuracy of the observations, because a lamp is a source of irregular heating, and it disturbs, by its glare, the condition of the observer's eye.

These seemed to constitute adequate grounds for urging the desirability of procuring a new heliometer, and accordingly, after some preliminary interviews with the authorities during Gill's visit to England in 1884, a letter was addressed to the Secretary of the Admiralty on the subject, of which a copy is given on p. 126 of the present work.

The Lords Commissioners of the Admiralty having approved the acquisition of a heliometer of the kind proposed, its construction was entrusted to Messrs Repsold of Hamburg. The instrument was completed in 1887 and erected in an observatory specially built for its reception. This observatory is described at p. 127 of the present work, and an account of the heliometer itself will be found in the *Annals of the Cape Observatory*, vol. vii. pp. 1–71, where the reader will find a detailed description of the methods employed to fulfil the above-mentioned desiderata.

In preparing the programme for a stellar-parallax campaign with the new heliometer, Gill was guided not so much by the desire to select those stars which, from their large proper motions, would probably have considerable parallaxes, but rather by the wish to make a contribution to cosmical astronomy on the lines indicated at the conclusion of Gill and Elkin's paper (*Mem. R.A.S.*, vol. xlviii.), viz., "The great cosmical questions to be answered are *not so much what is the precise parallax of this or that particular star*, but—

1. "What are the average parallaxes of those of the *first*, *second*, *third*, and *fourth* magnitude respectively, compared with those of lesser magnitude?"

2. "What connection does there subsist between the parallax of a star and the amount and direction of its proper motion; or can it be proved that there is no such connection or relation?"

The work was therefore first directed to the brightest stars of the Southern Hemisphere.

The parallax of α Centauri had already been so thoroughly investigated with the 4-inch heliometer that it seemed unnecessary to take up that work again.

Although the parallax of *Sirius* had also been determined both by Gill and Elkin in 1881–1882 with the 4-inch heliometer, it appeared desirable, for various reasons, to make another determination with the new heliometer. Elkin's remarkable result for the parallax of *Canopus*, viz., $+0''{\cdot}03 \pm 0''{\cdot}03$, and Gill's results of 1881–1882, viz., $-0''{\cdot}018 \pm 0''{\cdot}019$, for the parallax of β Centauri, both required confirmation, because the limitations imposed by the small aperture of the 4-inch heliometer prevented the selection of the most suitable comparison stars.

The first series of observations of β Orionis, made with the 7-inch heliometer in 1888–91, having given the results that no sensible parallax existed between it and the comparison stars employed, another series was observed by Mr Finlay in 1891–1892, employing different comparison stars, and this series entirely confirmed the first result.

β Crucis was observed by Gill in 1888 and 1889, by Mr Finlay in 1891–1892, and again by Gill in 1898; the same comparison stars were employed by both observers, and the series is important, showing that, with proper precautions, not only do two competent observers obtain the same result for parallax, but also the same position for β Crucis relative to the two comparison stars.

The observations for the parallax of α Scorpii were made by Mr Finlay, but, with this exception, the parallax determinations of the other first magnitude stars depend on Gill's observations.

The star *β Hydri* is the nearest star to the South Pole that is bright enough for observation with meridian instruments in full daylight, and it has consequently been largely used for determinations of azimuth. The considerable proper motion ($2''{\cdot}23$ on the great circle) indicates that the star has probably very sensible parallax, and Gill accordingly undertook its determination.

Digitized by Google

In the year 1896, when on a visit to his friend and colleague, Professor J. C. Kapteyn of Groningen, Gill met Mr W. de Sitter, then a student of mathematics and astronomy, who, whilst engaged in his studies in the University there, was assisting Professor Kapteyn in researches connected with the *Cape Photographic Durchmusterung*, and especially in studies connected with the colour of the stars of the Milky Way. Struck by Mr de Sitter's earnestness and capacity, Gill offered him a post as computer, and the opportunity of working at practical astronomy during his stay at the Cape Observatory. Mr de Sitter, having passed the preliminary examination for the degree of Doctor of Science, joined the observatory staff in August 1897. After some general training in the use of the transit instrument and portable theodolite, Mr Sitter, *inter alia*, engaged in regular work with the heliometer, and determined the parallaxes of τ Ceti, Piazzi XIV.^{h} 212, Z. C. V.^{h} 243 (the star of largest known proper motion), and Lacaille 2957. The results of all the observations for stellar parallax with the Cape heliometers are given in the following table, taken from vol. viii. part 2 of the *Cape Annals* (pp. 134B to 140B).

Results for Parallax of Bright Stars.

(Arranged in Order of Star's Magnitude.)

Note.—When the discussion occurs in the *Cape Annals* (*i.e.* when made with the 7-inch heliometer) the reference is given to the section (§) of the work; when in the *Memoirs R.A.S.*, vol. xlviii. (*i.e.* when made with the 4-inch heliometer), the page is quoted.

Name of Star.	Magnitude.	Observer.	Reference to Publication.	Parallax and its Probable Error.	Adopted Parallax and Probable Error.	Annual Proper Motion.	Magnitude of Comp. Stars.	
							α	β
α Canis Majoris . .	−1·76	Gill	p. 97	0·370 ± 0·009	0·370 ± 0·005	1·320	7·0	7·0
		Gill	§ 3	0·370 ± 0·010			8·7	8·7
		Elkin	p. 115	0·378 ± 0·022			7·7	8·0
α Argûs . . .	−0·96	Gill	§ 4	0·000 ± 0·010	0·000 ± 0·010	0·014	8·5	8·5
		Elkin	p. 183	0·003 ± 0·035			8·0	8·3
β Orionis . . .	0·35	Gill	§ 1	0·000 ± 0·010	0·000 ± 0·010	0·018	8·5	8·4
		Finlay	§ 12	0·001 ± 0·027			8·0	8·0
α_2 Centauri . .	0·40	Gill I.	p. 33	0·747 ± 0·013	0·752 ± 0·010	3·686	7·0	7·2
		Gill II.	p. 51	0·760 ± 0·013[1] / 0·021[2]			8·0	8·0
		Elkin I.	p. 69	0·783 ± 0·028			7·0	7·5
		Elkin II.	p. 81	0·676 ± 0·027			8·0	8·0
α Eridani . . .	0·51	Gill	§ 7	0·043 ± 0·015	0·043 ± 0·015	0·083	8·5	8·5
β Centauri . .	0·83	Gill	p. 161	0·000 ± 0·019	0·030 ± 0·015	0·067	only one	7·0
		Gill	§ 2	0·046 ± 0·017			8·0	8·0
α Crucis . . .	1·02	Gill	§ 8	0·050 ± 0·019	0·050 ± 0·019	0·046	8·3	9·0
α Virginis . . .	1·21	Gill	§ 9	−0·019 ± 0·010	0·000 ± 0·020	0·067	8·6	8·8
α Piscis Australis .	1·27	Gill	§ 6	0·130 ± 0·014	0·130 ± 0·014	0·379	8·5	8·5
α Scorpii . . .	1·34	Finlay	§ 13	0·021 ± 0·012	0·021 ± 0·012	0·041	8·0	6·5
β Crucis . . .	1·49	Gill and Finlay	§ 11	0·000 ± 0·008	0·000 ± 0·008	0·063	7·1	6·5
α Gruis . . .	1·92	Gill	§ 5	0·015 ± 0·007	0·015 ± 0·007	0·205	8·0	8·0

[1] Excluding possible systematic errors.

[2] Including possible systematic errors.

Digitized by Google

Results for Parallax of Stars having Large Proper Motions.

(Arranged in Order of the Amount of Proper Motion.)

Name of Star.	Magnitude.	Observer.	Reference to Publication.	Parallax and its Probable Error.	Adopted Parallax and Probable Error.	Annual Proper Motion.	Magnitude of Comp. Stars. α	Magnitude of Comp. Stars. β
Z. C. V.^{h} 243	8·5	de Sitter (*s*)	§ 16[1]	″0·319 ± ″0·027	″0·312 ± ″0·016	″8·70	8·5	8·2
		de Sitter (*p*)	§ 16[2]	0·308 ± 0·020			8·5	8·5
Lacaille 9352	7·1	Gill	p. 153	0·283 ± 0·016	0·283 ± 0·016	7·00	7·9	7·3
ε Indi	4·8	Gill	p. 129	0·286 ± 0·011	0·273 ± 0·040	4·68	7·3	7·8
		Elkin	p. 138	0·170 ± 0·032			7·0	7·2
o_2 Eridani	4·5	Gill	p. 160	0·166 ± 0·018	0·166 ± 0·018	4·06	7·0	7·3
e Eridani	4·3	Elkin	p. 179	0·149 ± 0·017	0·149 ± 0·017	3·09	6·2	6·5
β Hydræ	2·9	Gill	§ 10	0·134 ± 0·007	0·134 ± 0·007	2·23	7·9	6·9
ζ Toucani	4·3	Elkin	p. 172	0·138 ± 0·027	0·138 ± 0·027	2·03	7·5	7·5
P. XIV.^{h} 212	A 6·3	de Sitter	§ 15	A 0·162 ± 0·011	0·167 ± 0·008	2·01	7·9	8·0
	B 7·9			B 0·173 ± 0·012				
τ Ceti	3·6	de Sitter	§ 14	0·310 ± 0·012	0·310 ± 0·012	1·95	7·5	8·5
Lacaille 2957	6·0	de Sitter	§ 17	0·064 ± 0·024	0·064 ± 0·024	1·70	8·5	8·0

[1] Parallax determined by observations of distances from a pair of stars situated nearly in the major axis of the parallactic ellipse.
[2] Parallax determined by observations of position angle of a pair of stars situated nearly in the minor axis of the parallactic ellipse.

The above results represent all that is known of the parallaxes of stars situated in the Southern Hemisphere. To discuss the relative precision of the different series of observations, the results are grouped as follows :—

7-inch Heliometer.

Note.—The reader should remember that these results represent the probable error of the difference of two distances, and changes in this difference represent changes due to twice the parallax.

Section.	Star's Name.	Sum of the Distances = S.	Difference of the Distances = D.	Ratio = D/S.	Magnitude of Comparison Stars α	Magnitude of Comparison Stars β	Probable Error of One Observation = *r*.	Number of Equations.
	Observer, Gill.							
1	Rigel	6,242″	323″	0·052	8·5	8·4	±″0·061	25
2	β Centauri	10,662	97	·009	8·0	8·0	·085	22
3	Sirius	8,847	226	·025	8·7	8·7	·070	16
4	Canopus	11,352	701	·062	8·5	8·5	·073	15
5	α Gruis	7,180	159	·022	8·0	8·0	·042	12
6	Fomalhaut	7,732	747	·097	8·5	8·5	·079	12
7	Achernar	11,702	992	·084	8·5	8·5	·092	15
8	α Crucis	12,048	510	·040	8·3	9·0	[1][·121]	16
9	Spica	3,431	8	·002	8·6	8·8	·068	14
10	β Hydræ	8,890	359	·040	7·9	7·9	·052	12
11	β Crucis	6,247	622	·100	7·1	6·5	·074	32

[1] α Crucis is a double star (*s* = 5″·0). This circumstance, coupled with the faintness of one of the comparison stars, rendered the observations exceptionally difficult.

	Observer, Finlay.							
11	β Crucis	6,247	622	0·100	7·1	6·5	±0·074	32
12	Rigel	9,015	1057	·117	8·0	8·0	·122	12
13	Antares	3,579	308	·086	8·0	6·5	·084	16
	Observer, de Sitter.							
	Distances.							
14	τ Ceti	7,781	990	0·127	7·5	8·5	±0·075	13
15 *s.*	P. XIV.^{h} 212, A and B	10,323	503	·050	7·9	8·0	·079	26
16	Z. C. V.^{h} 243	13,275	879	·066	8·5	8·2	·174	15
17	Lacaille 2975	7,899	88	·011	8·5	8·0	·138	13
	Position Angles.							
15 *p.*	Z. C. V^h 243				8·5	8·5	±0·114	12

Digitized by Google

4-INCH HELIOMETER.

Page *Mem. R.A.S.*, vol. xlviii.	Star's Name.	Sum of the Distances = S.	Difference of the Distances = D.	Ratio = $\frac{D}{S}$.	Magnitude of Comparison Stars α	β	Probable Error of One Observation = r.	Number of Equations.
			Observer, GILL.					
28	α Centauri I.	6,898″	772″	0·112	7·0	7·2	±0″·118	94
49	α Centauri II.	11,473	547	·048	8·0	8·0	·111	42
83	Sirius	7,312	56	·007	7·0	7·0	·106	80
129	ϵ Indi	4,775	507	·106	7·3	7·8	·105	57
149	Lacaille 9352	11,234	2420	·215	7·9	7·3	·160	52
160	o_2 Eridani	12,768	230	·018	7·0	7·3	·132	30
	Gill's result from β Centauri with a single comparison star is not included in the above series.							
			Observer, ELKIN.					
65	α Centauri I.	11,200	1260	0·112	7·0	7·5	±0·172	87
80	α Centauri II.	5,740	140	·024	8·0	8·0	·176	49
115	Sirius	9,980	80	·008	7·7	8·0	·177	19
138	ϵ Indi	11,120	720	·061	7·0	7·2	·190	50
171	ζ Toucani	5,250	130	·011	7·5	7·5	·153	28
179	e Eridani	13,490	350	·026	6·2	6·5	·138	25
183	Canopus	2,570	190	·074	8·0	8·3	·305	25

From the considerable range of apparent precision in the different investigations made by the same observer with the same instrument, doubts may at first sight be thrown on the reliability of the values of the derived probable errors of the single observations. The principal factors in the precision of observations are necessarily the skill of the observer and the goodness of the instrument; but the precision must further depend on other circumstances, such as the sharpness or distinctness of the images, the relative steadiness of the two images to be superposed (or, rather, "crossed through"), and the geometrical conditions by which the correction for scale value is determined. If we assume that, in the mean, the atmospheric conditions are the same for all the investigations, and that the observer's capacity for accurate pointing remains constant for similar objects under similar conditions, then the precision of observation in the different series must depend on the following considerations:—

(1) The brightness of the comparison stars (it being assumed that the principal star is screened down to apparent equality of brightness with them.)

(2) The relative steadiness of the two images under observation. (This relative steadiness depends, *cæteris paribus*, on the distance measured.)

(3) The accuracy with which the correction for scale value is determined. (This, *cæteris paribus*, is a function of the sum of the distances and of the ratio of the difference of the distances to the sum of the distances.)

We may therefore consider the square of the probable error for a particular observer to be represented by—

a^2, which depends on the instrument and the magnitude of the comparison stars.

b^2, which is a function of the sum of the two distances.

c^2, which is a function of the ratio of the difference of the distances to the sum of the distances.

For his observations with the 7-inch heliometer, Gill endeavoured to find an empirical representation of the probable error attainable under different conditions, assuming

$$r^2 = a^2 + \frac{S}{1000} b^2 + 100 \frac{D}{S} c^2.$$

Substituting a^2_1 for a^2 when the fainter comparison star is Mag. 8·0 or brighter,
" a^2_2 " " " " 8·4 or 8·5,
" a^2_3 " " " " fainter than 8·5,

and forming equations of condition of this type for all his observations except α Crucis, he found:—

$$a^2_1 = -0{\cdot}000333$$
$$a^2_2 = +\ {\cdot}000250$$
$$a^2_3 = +\ {\cdot}001875$$
$$b^2 = +\ {\cdot}000426$$
$$c^2 = +\ {\cdot}000244$$

Digitized by Google

The observed and computed values of the probable error of the single observation of the difference of two opposite distances in each investigation are then represented as follows :—

	Probable Error of one Obs. by Gill.		Arithmetical Difference.
	Observed.	Computed.	O.—C.
§ 1. Rigel	±0″·061	±0″·065	−0″·004
2. β Centauri	·085	·071	+ ·014
3. Sirius	·070	·068	− ·002
4. Canopus	·073	·082	− ·009
5. α Gruis	·042	·062	− ·020
6. Fomalhaut	·079	·077	+ ·002
7. Achernar	·092	·086	+ ·006
9. Spica	·068	·042	+ ·026
10. β Hydri	·052	·071	− ·019
11. β Crucis	·074	·073	+ ·001

Having regard to the comparatively limited number of observations in each investigation, and to the fact that the theory of errors requires a large or even an infinite number of observations for rigorous derivation of the "probable error," the agreement between the observed and computed values of the probable errors seems to be as precise as could be expected, and indicates a general consistency in the quality of the observations throughout.

The negative value found for α^2_1 indicates that b^2 and c^2 are not true linear functions of S and $\frac{D}{S}$, as was assumed to be the case, and that, if the true law were known, an even closer agreement might be found between the observed and computed probable errors.

The investigations of Finlay and de Sitter with the 7-inch heliometer, and of Gill and Elkin with the 4-inch are not sufficiently numerous to permit of similar discussion, but it is evident from inspection that the variations of probable error in these series depend on similar causes. To find the probable error of the single observation for mean conditions in each series, we may take the square root of the mean of the squares of the probable errors. We then have :—

	Observer.	Mean Value of		Magnitude.	Probable Error of One Observation.	Corresponding Weight (Weight 1 for Probable Error ±0″·10)
		S.	$\frac{D}{S}$			
4-inch heliometer . . .	Gill	9077″	0·084	7·5	±0″·124	0·65
„ „ . . .	Elkin	8479	·045	7·5	·194	0·26
7-inch heliometer . . .	Gill	8228	0·049	8·2	±0·071	1·98
„ „ . . .	Finlay	6280	·101	7·7	·095	1·11
„ „ . . .	De Sitter	9819	·064	8·4	·114	0·77

These figures show the great superiority of the 7-inch heliometer. Gill is, unfortunately, the only observer with both instruments, his probable error in average conditions being ±0″·124 with the 4-inch and ±0″·071 with the 7-inch. In other words, one observation with the 7-inch heliometer has the same weight as three observations with the 4-inch. But this is not all. On account of the facilities given by printing readings, recording time on the slow-moving chronograph, and other improvements in working, a set of observations with the 7-inch heliometer occupies less than half the time that was required for a set of observations with the 4-inch. The efficiency of the 7-inch heliometer is thus six times that of the 4-inch heliometer. By this result alone the liberality of the Admiralty in granting the heliometer is amply justified.

Important as this advance is, the advance in freedom and proof of freedom from systematic error is still greater. In the case of Elkin's researches with the 4-inch heliometer, one must attach most weight to the results of those discussions of his in which the systematic errors depending upon the direction of measurement have been considered as unknowns in the equations of condition, because, with the 4-inch heliometer (*i.e.*, without the reversing prism), Elkin seems to be liable to errors depending on the direction of measurement, whenever the screen employed does not exactly equalise the apparent magnitudes of the two stars under observation. In the case of ε Indi one has, in consequence, assigned comparatively small weight to his result.

One is unable to detect any such error in Gill's observations with the 4-inch heliometer, except in the case of α Centauri, series I., where the visible presence of the fainter component, α_1, created an unquestionable systematic personal error depending on the direction of the line of distance with respect to the line joining the observer's eyes. The observations were in this case so arranged as to render the discussion and elimination of this error both satisfactory and complete. In the case of series II., the fainter comparison stars required so much "screening down"

Digitized by Google

that the fainter component, α_1 Centauri, was invisible. The final result for the parallax of α Centauri from the whole of the observations may be considered quite definitive, except in so far as it may be affected by the parallaxes of the comparison stars.

The excellent agreement between the results given by both heliometers for the parallaxes of *Sirius* and *Canopus* confirms very strongly the conclusion that the results of both instruments are reliable. It is true that in the case of β Centauri the agreement is less perfect, but, in the observations with the 4-inch heliometer, only a single comparison star was used, and that is a far less reliable method than the one which depends on the difference of two opposite distances; it is also not impossible that the actual difference between the absolute parallaxes of the comparison stars in the two series may amount to $0''{\cdot}03$, in which case both series of observations might be represented within the limits of their probable errors.

In the observations with the 7-inch heliometer one is unable to find any source of systematic error based either on theoretical or practical considerations. All the observations were made along the same apparent direction, that is to say, the reversing prism was turned so that a motion of the distance-handle caused the images to separate or approach each other along an apparently horizontal line, and then, after each of the four pointings which constitute an observation, the prism was rotated 90°. Such symmetrical arrangement of the pointings must tend to completely eliminate any personality which depends upon difference of magnitude in the two stars under observation, or which may depend on change of the apparent direction of measurement.

The employment of two comparison stars, symmetrically situated with respect to the principal star, permits the complete elimination of all error depending on scale value.

Thus apparently the only possible remaining source of error is that which may be supposed to arise from a difference between the mean refrangibility of the light of the principal star and that of the comparison star. If it be assumed that the observer always bisects the optical disc which is formed by light of the refrangibility of the star's mean colour, there is no doubt that the heliometer measures of the distance of red-coloured stars from normally coloured stars would require special corrections for refraction. On the other hand, it is possible to suppose that the observer in "crossing through" the images may insensibly select for superposition *not the corresponding points of greatest brightness* of the two spectra under observation, *but the points of similar colour.* If this latter be the case, the observations would be entirely free from the effects of chromatic dispersion. In the *Monthly Notices R.A.S.*, vol. lviii. p. 68, Gill has suggested a method for determining the "redness" of a star, and of ascertaining practically whether any systematic error produced by chromatic dispersion is a function of that "redness." Two series of observations were made under his direction in accordance with that programme (*Cape Annals*, vol. viii. part 2, pp. 124 B–129 B).

The star selected was the remarkably red star δ Sagittarii. Its visual magnitude is 2·8, while its photographic magnitude is 6·2.

One of the two opposite comparison stars selected was also slightly coloured; according to the *C.P.D.* its photographic magnitude is 1·3 magnitudes fainter than its visual magnitude—but the star appears colourless when its image is brought into proximity with the very red, screen-reduced image of δ Sagittarii—and no other equally suitable comparison star exists.

Partly for the reason that his eyes had lost their former sharpness in observing, and partly because the observers might (if prejudice is possible in heliometer observing) be less prejudiced than himself in making the observations, Gill entrusted the work to Mr W. de Sitter and Mr V. A. Lowinger.

The selected comparison stars are situated nearly on the same parallel (position angles 271° and 90°), and at not very unequal distances from δ Sagittarii (4610″ and 5336″).

The differences of these distances were observed at hour angles of 3–4 hours E. and W. of the meridian by both observers in the latter half of June 1898.

If $\Delta\beta \tan\zeta$ is the amount of the vertical displacement of δ Sagittarii relative to a normally coloured star, the correction for refraction in distance for normally coloured stars must be supplemented by the further correction $\Delta\beta \tan\zeta \cos(p-q)$, where p is the position angle reckoned from the abnormally coloured star as origin, q the parallactic angle, and ζ the zenith distance.

The available factors of $\Delta\beta$ were thus nearly $+3{\cdot}0$ and $-3{\cdot}0$.

Mr de Sitter's observations gave the result $\Delta\beta = -0''{\cdot}035$, probable error $\pm 0''{\cdot}30$.

Mr V. Lowinger's observations gave the result $\Delta\beta = +0''{\cdot}035$, probable error $\pm 0''{\cdot}021$.

It thus appears that the mean value of $\Delta\beta$ is practically zero, for the two observers obtain very small values of $\Delta\beta$, each of which is of about the same amount as the mean error of its determination, and the two values have opposite signs. Thus there is strong evidence, in face of the very abnormal colour of δ Sagittarii,

Digitized by Google

that both observers, in "crossing through," have *not* superposed the *points* of *maximum light* of the two images, but have unconsciously *superposed the similarly coloured parts of the two spectra* produced by chromatic dispersion of the atmosphere. If, then, in the case of such a very abnormally coloured star as δ Sagittarii, the systematic error produced in observations of distance is insignificant even at large zenith distances, it certainly will be entirely insensible in the case of much less highly coloured stars observed at smaller zenith distances. The same conclusion may be arrived at from the results of similar observations which have been made by Chase at Yale. There is further independent proof of freedom from all systematic error in the results obtained with the 7-inch heliometer to be found in Gill's discussion of his observations of β Orionis and α Centauri, as also in the precise agreement of Gill's and Finlay's independent observations for the parallax of β Crucis, and in de Sitter's two independent determinations of the parallax of the star Z. C. V.^{h} 243, viz., one from measures of distance, the other from measures of position angle.

RESEARCHES ON THE SOLAR PARALLAX.

The traditions of the Cape Observatory are intimately associated with the great fundamental problem of determining the solar parallax. La Caille, during his memorable visit to the Cape in 1676–78, had made observations of the declination of Mars, and a comparison of his results with those derived from similar observations in Europe gave 10″ for the value of the mean solar parallax.

Henderson made a series of observations of the declination of Mars with the Cape mural circle at the opposition of that planet in 1832, and a comparison of his results with the simultaneous observations made at Greenwich, Cambridge, and Altona gave for the mean value of the solar parallax (*Mem. R.A.S.*, vol. viii. pp. 95–103):—

	Solar Parallax.
From corresponding observations, Cape-Cambridge . . .	8″·588
„ „ „ „ Greenwich . . .	9″·343
„ „ „ „ Altona . . .	9″·105

Maclear observed the opposition of Mars in 1849–50 (*Mem. R.A.S.*, vol. xx. p. 99) and that in 1851–52 (*Mem. R.A.S.*, vol. xxi. p. 153), the former with the $8\frac{1}{2}$-foot equatorial, the latter with the mural circle, measuring the difference in declination between the planet and the comparison stars given in the *Nautical Almanac*. Apparently proper corresponding observations were not made in the Northern Hemisphere—at least no important determination of the solar parallax was made from the combination.

The favourable opposition of Mars in 1862 was observed at the Cape and elsewhere, Winnecke having previously issued a list of suitable comparison stars and an observing programme.

Winnecke (*Ast. Nach.*, lix. p. 262), from thirteen corresponding observations made at Pulkowa and the Cape, derived 8″·964 for the solar parallax.

Stone (*Mem. R.A.S.*, vol. xxxiii. pp. 77–102) derived for the parallax:—

From observations at Greenwich and the Cape . . .	8″·918±0″·042
„ „ Greenwich, Williamstown and the Cape .	8″·943±0″·031

The most complete discussion of the observed declinations of Mars at the opposition of 1862 was made by Simon Newcomb (*Washington Observations for 1864*, Appendix ii.), in which he includes the observations of Santiago and the Cape in the Southern Hemisphere and combines them with the observations made at Albany, Greenwich, Helsingfors, Leiden, Pulkowa, Washington, and Williamstown in the Northern Hemisphere. He derived from the whole the value 8″·855±0″·020 for the solar parallax.

The Transit of Venus 1874 was observed at the Cape as well as at many other stations throughout the world. The result obtained for the solar parallax from a combination of the observations of the British Transit of Venus expeditions, according to the Parliamentary Report (Airy, *M.N.*, *R.A.S.*, xxxviii. p. 11) was 8″·76. Mr Stone, on receipt of this report at the Cape early in the year 1878, at once set to work to recast the phases, that is to say, to select from the numerous phases which were noted at the different stations by the different observers those which appeared to him to be the epochs of true contact. By return mail he communicated a rediscussion of the observed phases, and derived from the very same observations the very different result 8″·897±0″·02 (*M.N.*, *R.A.S.*, xxxviii. p. 294).

That such discordant results could be derived by two competent astronomers from the same series of observations seems sufficient proof of the inadequacy of the method of observed contacts in a Transit of Venus to give an exact *determination* of the solar parallax. Obviously, the accepted value of no astronomical constant, much

Digitized by Google

less that of the fundamental unit of astronomy, could be left for its determination to observations that are capable of more than one interpretation; for, in the case in question, the discordant results were neither due to any arithmetical faults on either side, nor to any errors in the method of computation, but merely to difference of opinion about the meanings to be attached to the words employed by the observers in describing the phases of contact which they saw at particular epochs. The outcome of the many costly expeditions of 1874 was thus a result of little value as regards their main object—the determination of the solar parallax,—but many valuable determinations of latitude and longitude were made throughout the world, and much general scientific experience was acquired.

The Transit of Venus in 1882 was therefore awaited at the Cape without the special interest with which that of 1874 had been regarded, except for the fact that it brought to the Cape visitors of the greatest interest—viz., Professor Newcomb and his American party (who selected Wellington in Cape Colony for their station), Fathers Perry and Sidgreaves from Stonyhurst (who stayed at the observatory on their way to and from Madagascar), and Mr Marth (who observed in Cape Colony). That visit gave the Cape astronomers much pleasure, and led to much after co-operation with Professor Newcomb.

It would be unnecessary to trace here the gradual progress of the solution of the problem of determining the solar parallax, were it not that the policy and work of the Cape Observatory have been so closely associated with it.

The reader will find an account of the state of our knowledge of the problem towards the end of 1878 in a series of articles by Gill on "The Determination of the Solar Parallax" (*The Observatory*, vol. i. pp. 7, 38, 74, 101, 129, 273).

The writer there comes to the following conclusions:—

(1) Observed Contacts in a Transit of Venus:

We find at one station one series of phenomena described by the different observers in language often nearly identical; at the corresponding opposite station we find an entirely different series of phenomena described, and it is impossible satisfactorily to identify the corresponding phenomena at the two stations. Indeed, the final value of the parallax at the two stations will entirely depend on the interpretation put upon the language of the observers.

On the whole, from what we know of the uncertainties of the observations of contact and also of the results of the actual combination of various stations for parallax, we are driven to the conclusion that the method of determining the solar parallax by eye-observation of contact at a Transit of Venus has been a failure, nor can the method be looked upon as a means of affording a final and satisfactory solution of the problem. It fails in so far that its final result depends more or less on assumption, and so long as any assumption is made we have already shown that that method must be rejected (*loc. cit.*, p. 103).

(2) Photographic Observations.—The writer condemns the British method (in which the solar image produced by the object-glass is enlarged by a secondary magnifier), on the ground that no satisfactory means exist for determining the instantaneous scale value nor the distortion of the image. He concludes (*loc. cit.*, p. 133):

There are as yet no published data of the results of photographic measures upon which to found definite conclusions as to the probable accuracy of the photographic method when a secondary magnifier is employed; but for the reasons we have given, it seems improbable that in that way the required accuracy can be attained.

The writer views more favourably the method in which object-glasses of long focus are employed, which can form images practically free from optical distortion, and in which the scale value can be accurately determined by measurement of the distance between the optical centre of the object-glass and the surface of the photographic plate. But he has considerable doubt as to freedom from distortion produced by the heat of the sun in the heliostat mirrors employed to reflect the sun's rays into the long horizontal telescopes. He writes:

It is probable that here we must look for any discrepancies in the results of the long focus telescopes, and all photographs taken by the aid of mirrors, in which sensible change of form is produced by exposure to the sun, must be rejected (*loc. cit.*, p. 133).

(3) Heliometer Observations of Transit of Venus.—The writer, after describing all the possible sources of error and the means adopted to determine the effect on the observations, concludes:

That heliometer measures, in the case of the Transit of Venus, from the exceeding care and great labour bestowed to ascertain and eliminate all sources of error, will give a result of considerable accuracy; but, at the same time, from the fact that these errors have to be independently determined and applied, and are not eliminated in the course of the observations themselves, they do not possess that entirely satisfactory character so desirable in a delicate investigation (*loc. cit.*, p. 276).

(4) Heliometer Observations of Mars and Minor Planets.—The writer recalls the fact that Airy had recommended observations of difference in R.A. between Mars and comparison stars both E. and W. of the meridian, but points out how superior in accuracy heliometer measures would be over observations of transits across wires,

Digitized by Google

and the fact that "such measures are only affected by the irregularity of refraction in the short distance between the star and planet." The final conclusion is:

The opportunities of observing *Mars* in the most favourable circumstances are somewhat rare; and though a very large parallactic displacement can be observed, there are still difficulties connected with observing a disc, or rather a disc affected by phase. Though the writer believes these difficulties can be overcome so as to leave no systematic source of error, yet he does not think that the probable accidental error will be so small as in the case of the minor planets; but until the observations now being made by him * are reduced, it is not easy to give a sound opinion on this subject. The method of observing the minor planets does, however, alone promise an entirely satisfactory solution of the problem. Its proper execution requires a heliometer capable of dealing with the faintest stars of Argelander's Durchmusterung, an instrument of 6 or 7 inches aperture, and the devotion of two or three years to the study of its division errors and constants and to the execution of the observations. To such a work an earnest astronomer would gladly give so much of his life, and it is to be hoped that ere long such a scheme will be planned and executed (*loc. cit.*, p. 280).

In a previous part of the same paper (*loc. cit.*, p. 279), from an estimate based on the experimental observations on the minor planet "Juno" made at Mauritius in 1874 (*Dun Echt Publications*, vol. ii.), the conclusion is derived, viz., that "*four reasonably favourable oppositions of favourable minor planets will give the solar parallax with all the accuracy required by the present state of science,*† provided they are observed with a first rate heliometer by an experienced observer in a good station. The cost and labour of such an undertaking are as nothing compared with the sums required to equip a Transit of Venus expedition, *and the results are capable of only one interpretation*" (*loc. cit.*, p. 279).

Now let us compare these anticipations with observed facts:—

(1) Observed Contacts in a Transit of Venus.—So far, the only complete discussion of all the contact observations in the Transit of Venus of 1761, 1769, 1874, and 1882 made by one astronomer has been that made by Professor Simon Newcomb. He gives the results at pp. 145 and 146 of his *Astronomical Constants* (Washington Government Printing Office, 1895).

The final result is mean solar parallax = 8″·797.

The *mean error* of this result, viz., ± 0″·023, shows that the determination falls far short of the accuracy demanded, and it is not too much to say that if the phases had been cast and the weights of the observations been assigned by another astronomer of equal capacity and judgment, the resultant parallax might possibly have been quite a different one. All that can be reasonably said on the subject is that, whilst the contact observations of the Transit of Venus are incapable of giving a *determination* of the solar parallax, Newcomb's discussion shows that they can be interpreted to accord on the whole with what we now know to be a very close approximation to the true value of that constant.

(2) and (3) Photographic and Heliometer Observations. — The results of the British photographic observations, in which a secondary magnifier was employed, proved, as might have been expected, to be a complete failure. No results from the numerous plates, secured in 1874 and afterwards measured, have been published, and the method was abandoned in the British expeditions to observe the transit of 1882.

Newcomb (*loc. cit.*, p. 143) quotes the results for the American photographic observations of the transits of 1874 and 1882 as follows:—

		Solar Parallax.	Probable Error.
1874.	From distances measured on the photographic plates . .	8″·888	± 0″·040
„	From position angles measured on the photographic plates . .	8″·873	± 0″·060
1882.	From distances measured on the photographic plates . .	8″·847	± 0″·012 ‡
„	From position angles measured on the photographic plates .	8″·772	± 0″·050

The German heliometer observations of the Transits of Venus were reduced and discussed by Dr Auwers with the following results (*Bericht über die deutschen Beobachtungen*, vol. v. p. 710):—

		Probable Error.
Solar parallax from transit of 1874	= 8″·876	± 0″·042
„ „ „ „ 1882	= 8″·879	± 0″·025

* This refers to the writer's observations of Mars then being made by him at Ascension in 1877.

† At *loc. cit.*, p. 11, of the paper in question, the writer bases the *requisite accuracy* on a remark of Le Verrier's, viz., "The determination of the solar parallax by means of the Transit of Venus (we take this to include all instrumental methods) still retains its interest, but conditionally on its being made with exceptional precision, so that the astronomer may be able to answer for it with an accuracy exceeding $\frac{1}{100}$th of a second of arc."

‡ In the estimate of this probable error Newcomb remarks: "Harkness does not include the probable error of the angular value of the unit of distance on the plate, which may arise from a number of sources, including the possible deviation of the mirror from a perfect plane."

Digitized by Google

Combining these photographic observations with the heliometer observations, and allowing for the probable error of the scale value in the photographic distances of 1882, Newcomb derives the value

Solar parallax = 8″·857 with the *mean error* ± 0″·023.

Even if this determination was affected by no possibility of systematic error, the uncertainty of the determination is far too great, and therefore the methods adopted do not respond to the requirements of the problem. But Newcomb goes on very reasonably to point out that "the deviation of the above result from the mean of all the other good ones * is worthy of special attention. The deviation is more than three times its mean error. We must therefore accept one of two conclusions, either the probable errors have been considerably underestimated, or the method is affected by some undiscoverable source of systematic error, which makes it tend to give too large a result."

The writer's belief is that the explanation of the matter lies in the chromatic dispersion of the atmosphere.

The effect of this is eliminated in heliometer observations of star discs (see p. lxvii), but it probably plays an important part where the upper and lower limbs of the sun are coloured in an opposite sense as the result of atmospheric dispersion, and where the intensity of the light surrounding Venus on the sun's disc is greater than that at the sun's limb.

(4) Heliometer Observations of Mars and Minor Planets.—The promising results of the experimental heliometer observations of the minor planet *Juno*, made at Mauritius in 1874 (see p. xxxvi), and the satisfactory results of the heliometer observations of Mars at Ascension in 1877 (see p. xxxviii) all tended to prove the soundness of the original conclusions arrived at under this head. The failure of the Transit of Venus expeditions of 1874 and 1882 made in it the highest degree desirable to secure means for a decisive determination of the solar parallax by observations of minor planets. This was one of the considerations which induced Gill to urge the Admiralty to acquire a powerful heliometer for the Cape. Looking forward to the available opportunities, it was found that *Iris* in 1888 and *Victoria* and *Sappho* in 1889 would be exceptionally favourably situated for parallax determination.

The employment of the diurnal method was at first seriously considered; it has certain advantages, such, for example, as the elimination of the effect of the errors of the star places by observing the same comparison stars in the evening and early morning. Gill's other official duties rendered it impossible for him to be absent from the Cape for the long period requisite to occupy and observe at a station near the equator, and only in such a station could the work be done in this way to the greatest advantage. Besides, it is hardly possible to carry out a long series of observations demanding the highest refinement without some approximation to the facilities and adjuncts of a fixed observatory; the highest accuracy of hand and eye are only attainable in conditions of comparative physical comfort and in the absence of all other anxiety and nervous strain.

The observations of *Iris* were originally planned in the expectation that the Cape and Yale heliometers would be the only co-operating instruments, and that only one set of observations each night would be made at each observatory. Under these conditions the strongest determination of the parallax would be secured by selecting comparison stars situated in position angles of 135° and 315° from the planet, and as nearly as possible equidistant from it. These distances should be measured at a western hour angle of about three hours at the Cape (*i.e.* in the early morning), and at an eastern hour angle of about three hours (*i.e.* in the evening) at Yale. At these hour angles the line joining the stars would be nearly vertical at both observatories, and hence the maximum parallax factor would take place along the line of measured distances. Further, since the difference in longitude between the two observatories is about six hours, the measures would be nearly simultaneous, and small errors in the tabular motion of the planet would therefore be almost perfectly eliminated from the result for parallax.

This plan was modified to some extent by the co-operation of the heliometers at Leipzig and the Radcliffe Observatory (Oxford), which necessitated the abandonment of the principle of using only simultaneous observations, and demanded the addition of a series of early morning observations at western hour angles at Yale. On a number of nights no suitable pairs of stars of 8·5 magnitude or brighter were available in the required position angles, and for these, if a suitable star was found near the planet, its distance and position angle were to be observed and the reduction constants for scale value and index error to be derived from a pair of standard stars observed at the same sitting. Between 10th October and 13th December 1888, 1107 measures of the planet and comparison stars were secured, of which 1004 were available for derivation of the parallax of the planet from groups of observations involving only the same comparison stars.

* Newcomb here refers to the results from the determination of the solar parallax from the aberration-constant and the velocity of light, the parallactic inequality, the lunar equation, etc.

Digitized by Google

At the Cape the observations were shared between Gill and Finlay, at Yale by Elkin and Hall, and at Leipzig by Peter. The planet itself and the thirty stars included in the programme for comparison stars were observed on the meridian, at Berlin, Cape of Good Hope, Dublin, Greenwich, Leiden, Leipzig, Melbourne, Oxford (Radcliffe Observatory), and Pulkowa. The adopted places of the comparison stars were derived by Dr Elkin with results only differing slightly from those of Dr Auwers' exhaustive discussion (*Cape Annals*, vol. vii. pp. 413–415). The original approximate ephemeris furnished by the Berlin *Jahrbuch* office was employed for the formation of three normal places derived from comparison with the meridian places—new elements derived from these normal places, with special perturbations of the rectangular co-ordinates computed for *Venus*, *Earth*, *Mars*, *Jupiter*, and *Saturn* furnished a more accurate ephemeris, and finally the values expressing $\Delta\alpha$ and $\Delta\delta$ between the tabular and observed places on the meridian were plotted and daily corrections in both co-ordinates were derived by graphic interpolation. As the observations were reduced in groups, never extending over more than four days, in which the same comparison stars were employed in opposite hemispheres, neither small errors in the motion of the planet nor in the star places can sensibly affect the resulting parallax.

The details of the observations are given in vol. vii. of the *Annals of the Cape Observatory*, pp. 287–391, and those of Dr Elkin's discussion of the parallax in *loc. cit.*, vol. vi. pp. (5)–(169). The resultant value of the solar parallax is

8″·812, with the probable error **±0″·009**.

For the observations of *Victoria* in 1889 a more ambitious programme was attempted. It was proposed not only to make morning and evening observations in both hemispheres, but to attempt to determine the positions of the comparison stars with such accuracy that their outstanding errors might be regarded as zero, or rather with such small accidental errors as would not systematically affect the resulting parallax. If effect could be given to this plan, no observation of *Victoria* would be lost, because every observation would help to determine the absolute position of the planet.

Accordingly, in April 1889 a circular was addressed by Gill to all the principal observatories containing programmes for the proposed heliometric, photographic, and meridian observations, of which a copy will be found in the *Cape Annals*, vol. vi. pp. xix.–xxx.

Unfortunately, no co-operation was secured in the photographic part of the programme, and therefore no measures of the photographs obtained at the Cape were made; but the response to the heliometer and meridian programmes was most hearty and complete. It was originally intended that the heliometer observations at the Cape should be shared by Gill and Finlay (as had been the case in the *Iris* observations of 1888), because a breakdown in the Cape series (the only heliometer series in the Southern Hemisphere) might end in the failure of the whole scheme, and Gill feared that a long series of observations every morning and evening from 10th June to 18th October * would involve a greater nervous and physical strain than a single observer could safely undertake. But, after these plans were settled, Gill received Admiralty instructions to make arrangements for determining the longitudes of stations on the West Coast of Africa by exchange of submarine telegraph signals, with Commander Pullen as the travelling observer, during the period when the *Victoria* and *Sappho* observations were to be undertaken, and the services of Mr Finlay were necessary for this work.

Under these circumstances Gill applied to his constant friend and correspondent, Professor Auwers of Berlin, who was not only a skilled heliometer observer, but had previously devoted no small part of his scientific work to researches connected with the solar parallax. He replied at once that he would either come personally and share the work, or send an astronomer to do so who had been well trained in heliometer observing in connection with the German Transit of Venus expeditions. Finally, Professor Auwers found it possible to come to the Cape in person. He reached the Cape on 24th May and shared with Gill in the observations of *Victoria*. Official duties in Berlin prevented his remaining to take part in the observations of *Sappho*, and he sailed for Europe on 5th September. His prompt aid in this difficulty is borne in grateful remembrance.

In the Northern Hemisphere the heliometer observations were made at Yale by Dr Elkin and Mr Hall; at Leipzig by Dr Peter; at Göttingen by Dr Schur; and at Bamberg by Dr Hartwig. When the heliometer observations were collected, it appeared that *Victoria* had been observed at one or more of the heliometer observatories on every night, with only five exceptions, from 10th June to 26th August, and that the observations were nearly equally divided in number between the Northern and Southern Hemispheres: viz., 826 observations at the Cape, and 801 in the Northern Hemisphere, subdivided as follows: viz., Yale (531), Leipzig (158), Göttingen (87), Bamberg (25).

* The programme of the observations of *Victoria* extended from 10th June to 28th August and that of *Sappho* from 18th September to 28th October.

Digitized by Google

Meridian observations of the planet and comparison stars, in accordance with the programme, were made at the following observatories :—

Algiers.	Dublin.	Melbourne.
Berlin.	Greenwich.	Naples.
Bordeaux.	Hamburg.	Oxford (Radcliffe Observatory).
Cape of Good Hope.	Mount Hamilton.	Paris.
Cambridge (Eng.).	Königsberg.	Pulkowa.
Cambridge (Mass.).	Leiden.	Vienna (Kuffner's Observatory).
Cincinnati.	Leipzig.	Washington.
Cordoba.		

The meridian observations were collected and discussed by Professor Auwers: a full account of this admirable and exhaustive work is given by him in the *Cape Annals*, vol. vii. pp. 405–716. The results showed that whilst the agreement of the declinations of the stars determined at the different observatories was, on the whole, sufficiently good, the right ascensions exhibited discrepancies which rendered it necessary to increase their accuracy by some independent process. Dr Elkin at Yale, and Dr Schur at Göttingen, having agreed to co-operate in the work, a final programme for a heliometer triangulation of the Victoria comparison stars was forwarded to them in January 1890. The work was begun in April 1890 (*i.e.* as soon as the stars could be observed in the early morning), and was continued till November, when the stars were too near the sun for further observation. At Yale the observations were made by Mr Chase, assistant at the observatory, Dr Elkin being himself occupied with the completion of some researches on stellar parallax. At Göttingen the observations were made by Drs Schur and Ambronn. The Cape observations were made by Gill, Finlay, and Jacoby.*

In the *Cape Annals*, vol. vi. pp. 3–244, Gill gives details of the heliometer triangulation and its combination with the meridian observations. The result of this combination was to increase the weights of the co-ordinates derived from the meridian observations as follows :—

	α	δ
Average weight of a star place from meridian observation only	6·0	8·7
Average weight of a star place from combined meridian and heliometer observations .	24·0	22·2

where weight unity corresponds with a *mean error* of $\pm 0''\cdot 200$. The triangulation thus increased the weights of the star places in R.A. four times, and equalised the precision of the star places in R.A. and Declination. The probable error of the determination of a star's place in any direction was therefore $= \pm 0\cdot 67 \frac{\times 0''\cdot 20}{\sqrt{23}} = \pm 0''\cdot 03$. Thus the requisite condition was realised, viz., that the star places should be so accurately determined that their residual errors might be regarded as zero, or rather as creating small additional non-systematic errors in the heliometer observations. It would therefore be possible to trace the path of the planet in the heavens during nearly three complete revolutions of the moon about the earth, with an accuracy equalling that of the determination of a star's parallactic ellipse, and hence to determine the Mass of the Moon and to utilise every observation towards a determination of the parallax. From a preliminary attempt to discuss the observations of *Victoria* on the basis of an ephemeris computed with 7-figure logarithms, it was found that the accidental errors of the ephemeris were greater than those of the observations. It seemed essential, therefore, that a new ephemeris of the planet should be computed, beginning with a new heliocentric ephemeris of the earth, in which the lunar perturbation is computed rigorously from the co-ordinates of the moon (not by the less exact methods of Leverrier's "Tables du Soleil"), and in which the ephemeris of the planet is computed with 8-figure logarithms.

With great kindness Dr Tietjin undertook this work at the office of the *Berliner Jahrbuch*, where it was carried out under his direction, partly by Dr Bohlin and partly by Dr Kurt Laves. †

The final value of the solar parallax from *all* the observations of *Victoria* was

$8''\cdot 8013$, with the probable error **$\pm 0''\cdot 0061$**

(*loc. cit.*, p. 552), a determination which rests on a very sure basis.

* Mr Harold Jacoby was a member of the American Eclipse expedition to Cape Ledo in 1890, and, on the visit of the U.S. Ship *Pensacola* to Cape Town, with the eclipse party on board, he expressed a wish to remain some months at the Cape Observatory. After acquiring some practice with the heliometer, he took part in the triangulation of the *Victoria* stars. He afterwards became a Professor of Astronomy and Surveying at Columbia College, New York, and is favourably known to astronomers by his measurements and reductions of Rutherford's stellar photographs and many other similar researches.

† For details see *Cape Annals*, vol. vi. pp. 439–444.

Digitized by Google

But a still more remarkable result is arrived at if we confine the determination to the Cape Observatory only, when the resulting value of the solar parallax was found to be:

$$8''{\cdot}8014, \text{ with the probable error } \pm 0''{\cdot}0108$$

(*loc. cit.*, p. 533). Thus, although the geometrical conditions resulting from the latitude of the observatory and the declination of the planet are not at all favourable for determining parallax by the diurnal method, yet the value of the parallax derived from Cape observations alone has not only a small probable error, but it agrees in the mean quite perfectly with the value derived from observations in opposite hemispheres. No better proof than this could be given of the freedom of the general result from systematic errors.

. . . . . .

In preparing the *Sappho* programme, Gill's intention was that the observations should consist, as far as possible, of measures of distance from stars on opposite sides of the planet and situated as symmetrically as possible with regard to it.

Because of the faintness of *Sappho*, the observations were limited to seventeen days before and twenty-four days after opposition, the closer limitation in the former case being due to the absence of suitable comparison stars in the required region of the sky.

Meridian observations of the comparison stars were made at

Berlin.	Cincinnati.	Melbourne.
Bordeaux.	Dublin.	Oxford (Radcliffe).
Cambridge (Eng.).	Greenwich.	Pulkowa.
Cambridge (Mass.).	Leiden.	Vienna.
Cape of Good Hope.	Leipzig.	Washington.

These observations were exhaustively discussed by Dr Auwers (*Cape Annals*, vol. vii. pp. 615–693), and the final places given in that work were adopted.

The object of these meridian observations of the *Sappho* stars was to furnish places of the planet sufficiently exact for determining the error of the tabular motion of the planet and for determining, from the *sum* of two opposite distances, the heliometer scale value applicable to the *difference* of these distances. But, because no provision could be made for the execution of a heliometer triangulation of the comparison stars, the star places were not regarded as sufficiently exact to furnish *absolute* positions of the planet for parallax, etc., according to the method followed in the case of *Victoria*. The programme of the heliometer observations included, in a few cases, the measurement of short distances and position angles from single comparison stars when no suitable pairs of stars were available. The considerable personal corrections, to which heliometer observations of very short single distances are liable, was not realised at the time when the *Sappho* programme was arranged. But the observations of *Sappho* afford no independent determination of these personal corrections; and, as *Sappho* is much fainter than *Victoria*, it is possible that, in small distances, the systematic corrections may be very sensibly different from those obtained from *Victoria*. On this account it is necessary to exclude the single distances from the parallax determination. Hence the parallax was determined solely from the difference of two opposite distances, when this difference is observed relative to the same pair of stars from opposite hemispheres.

The heliometer observations were made at the Cape by Gill (except on 23rd October, when they were made by Finlay), at Yale by Elkin and Hall, at Leipzig by Peter, at Göttingen by Schur and Ambronn, at Bamberg by Hartwig. They are published in detail, *Cape Annals*, vol. vii. pp. 210–284. The number of pointings made at each observatory was as follows:—Cape, 1120; Yale, 1266; Leipzig, 500; Göttingen, 276; Bamberg, 80.

These observations are discussed by Gill, *Cape Annals*, vol. vi.

The tabular places of *Sappho* were interpolated from an ephemeris which was prepared at the *Berliner Jahrbuch* office and communicated by Dr Auwers. The ephemeris was corrected by the employment of the heliometer observations in combination with the star places as determined by the meridian observations. The errors of the ephemeris were found to be represented by the expressions

$$\Delta a = a + \frac{t}{10}\beta + \frac{t^2}{100}\gamma$$

$$\Delta \delta = a^1 + \frac{t}{10}\beta^1 + \frac{t^2}{100}\gamma^1,$$

where t is the time, expressed in days from the date of opposition (October 5·5).

Digitized by Google

If the errors of the ephemeris had been capable of exact representation in terms of $\alpha+\beta\frac{t}{10}+\gamma\frac{t^2}{100}$; if the star places had been connected by heliometer triangulation and the ephemeris had been computed with the same precautions as the final ephemeris of Victoria, then the corrected values of $\Delta\alpha$ and $\Delta\delta$ computed from groups of observations at different epochs should have been identical within limits indicated by their probable errors. But as none of these conditions are fulfilled, and as the period covered by the observations embraces only $1\frac{1}{2}$ revolutions of the moon about the earth, it is impossible to separate satisfactorily the errors which depend on the lunar equation from the empiric corrections of the ephemeris which have been developed in powers of the time.

The better agreement *inter se* of the final values of $\Delta\delta$, compared with that of the separate values of $\Delta\alpha$, pointed to a more accurate determination of the places of the comparison stars in declination than in right ascension, and probably also to greater accidental errors of the ephemeris in the latter co-ordinate.

The suspicion of the latter circumstance would have led to the preparation of another ephemeris had that been necessary for definitive computation of the parallax; but, as this latter requires only a knowledge of the planet's motion for periods not exceeding ± two days, the present ephemeris is amply sufficient for our purpose.

If we could regard the star places as absolutely known and derive the parallax from the normal equations in each group, we should have the following values of the parallax solution* :—

	I.	II.	Weight.
From Group I., solar parallax . . .	8″·746	8″·750	11·2
„ II., „ . . .	·789	·781	16·6
„ III., „ . . .	·760	·749	19·1
„ IV., „ . . .	·799	·700	3·9
„ V., „ . . .	·780	·794	13·2
„ VI., „ . . .	·829	·827	23·9
„ VII., „ . . .	·813	·826	19·3
Mean having regard to weights . . .	8·792	8·789	107·2
Probable error . . .	± 0·015	± 0·014	

But, without a more rigorous determination of the star places, it is only legitimate to employ those combinations of observations in which the same comparison stars have been observed in opposite hemispheres. It is obvious that the planet's motion is sufficiently well determined for this purpose.

Accordingly, new sets of normals were formed rejecting all the equations resulting from measures from pairs of stars that were not observed in both hemispheres, and the parallax was determined from the remaining observations of each group. The results were—

	Without personal corrections.		With personal corrections.		Weight.
Solar parallax,	= 8″·0006	or	8″·0014	− 0·0017 dL†	71·31.

The effect of any possible error in the adopted value of the lunar equation is therefore quite insensible. But on examining the separate results, one is struck by the large discrepancy in the value of the parallax from group IV. when computed without and with personal corrections. The greater part of this discrepancy arises from the fact that the two stars t and x are comparatively near the planet, and one of the distances is more than double that of the other. Also, the star t is a double star (mags. 8·2 and 9·3, $s=0''\cdot9$, p 175°), and Dr Schur notes that one of his observations was made without the prism and "stars scarcely visible—cirrus cloud." It is thus doubtful if the pointings were made in the same manner by different observers. The observations referred to the stars t x (that is to say all the effective observations of group IV.) are therefore rejected.

The resulting value of the parallax is then—

Without personal correction 8″·7923, with the probable error 0″·0133.
With personal correction 8″·7981, with the probable error 0″·0114.

* In solution I. the personal terms are regarded as zero. In solution II. the values found for them from the discussion of the observations of *Victoria* are adopted.

† Here dL expresses the number of $\frac{1}{10}$ parts that the tabular lunar equation has to be increased.

Digitized by Google

Thus the personal corrections derived from the discussion of *Victoria* do sensibly improve the agreement of the results, and we accept those so corrected as definitive. Divided into groups, we have finally—

		Weight.		
Group I.	$z = -0.0266$	9·91	or ⊙ Parallax	$= 8''.7766$
„ II.	− ·0093	13·25	„	= ·7918
„ III.	− ·0111	12·45	„	= ·7902
„ V.	+ ·0340	8·66	„	= ·8299
„ VI.	+ ·0421	9·45	„	= ·8370
„ VII.	− ·0261	11·83	„	= ·7770
Mean	$z = -0.0022$	65·55	„	$= 8''.7981$

If the probable error of the resulting parallax is derived from the inter-agreement of the six results, we get a probable error for the parallax of $\pm 0''.0068$. The smaller probable error thus arrived at tends to show that personal errors are to some extent eliminated by combinations of a variety of pairs in groups; but the number of groups is too small to permit a definite conclusion on the subject. It is preferable, therefore, not to under-estimate the probable error, but to adopt as definitive the probable error $\pm 0''.0114$ derived from the separate combination of the twenty-two results derived from observations from the same pair of comparison stars in opposite hemispheres, rather than $\pm 0''.0068$, derived from the six separate groups.

One cannot apply to the observations of *Sappho* the same independent test as to the *Victoria* results, viz., to determine the parallax from the Cape observations alone, because the considerable meridian zenith distance of *Sappho*, both at the northern observatories and the Cape, renders the parallax factors in right ascension very unfavourable. Besides this, the same comparison stars were not used for the morning and evening observations, and it was not possible to arrange for their connection by heliometer triangulation. The only available independent check is to determine the parallax by combining the observations of each northern observatory separately, with the corresponding observations at the Cape. The results are—

	Solar Parallax.	Probable Error.
From Cape and Yale	$8''.797$	$\pm 0''.020$
„ Cape and Leipzig	·793	± ·026
„ Cape and Göttingen	·834	± ·031
„ Cape and Bamberg	·725	± ·056*

Of course any combination of this kind for the definitive value of the parallax is quite inadmissible, because, in some cases, the same Cape observations would be used three times over. The final result from the *Sappho* observations must be regarded as

$8''.7981$, with the probable error $\pm 0''.0114$,

where each observation enters into the result with its proper weight. But it is very satisfactory to find that the values of the parallax as derived separately from the observations of each northern observatory, combined with the corresponding observations at the Cape, agree well within the limits to be expected from their probable errors.

Collecting the definitive results from these investigations, we have—

	Solar Parallax.	Probable Error.	Combining Weight.
From observations of *Iris*	$8''.8120$	$\pm 0''.0090$	1·23
„ „ „ *Victoria*	·8013	± ·0061	2·69
„ „ „ *Sappho*	·7981	± ·0114	0·77

The combining weights are the reciprocals of the squares of the probable errors (unity $= \pm 0''.01$). Having regard to these weights, the mean is—

Mean solar parallax = $8''.8036$; weight 4·69; probable error $\pm$ 0·0046.

The value of the solar parallax found by Dr Auwers (*Cape Annals*, vol. vi. part 5, pp. (5)–(95)) from his discussion of the meridian observations of *Iris*, *Victoria*, and *Sappho* is—

From *Iris*,	$8''.771$	mean error $\pm 0''.130$
„ *Victoria*,	8·845	„ „ ±0·051
„ *Sappho*,	8·626	„ „ ±0·118

* From observations on one night only.

Digitized by Google

Combining these results with weights according to their mean errors, the parallax from the meridian observations alone becomes

$$8''{\cdot}806, \text{ with the probable error } \pm 0''{\cdot}030.$$

The mean result is thus almost identical with that derived from the heliometer observations, but its comparatively large probable error makes its combining weight less than $\frac{1}{40}$th part that of the latter, and its inclusion or exclusion does not sensibly affect the mean result previously arrived at. It is only fair to the meridian observers, and to the meridian methods generally, to state that the derivation of the solar parallax from meridian observations formed no part of the original programme, and that these observations of the planets were requested solely for the purpose of affording preliminary corrections to their tabular motions. Had the primary object been to determine the parallax by meridian observations, there is no doubt that a somewhat higher accuracy could have been attained.

The possible sources of inherent systematic error, which, so far, have not been already exhaustively discussed and shown to be absolutely eliminated, are :

(a) Error in the adopted tabular values of the planet's distance from the earth, expressed in terms of the earth's mean distance from the sun.

(b) Error produced by systematic difference of refrangibility between the mean visual light of the minor planet and that of the comparison stars.

(a) With regard to *Iris*, Dr Elkin has discussed this question, *Cape Annals*, vol. vi. part 4, p. (20), and finds that there is a small systematic difference between the values of Δ derived from his special opposition ephemeris and those given by Brünnow's tables of the planet. As the latter have represented the observed motions of *Iris* very closely for many years, there can be no doubt that the value of Δ from these tables is correct, far within the limits required for parallax determination. A small correction of $-0''{\cdot}003$ was applied by Dr Elkin to the computed parallax to reduce his result to that which it would have been if Brünnow's values of Δ had been employed. Herr Lange and Lieut. von der Proben have shown (*Cape Annals*, vol. vi. part 6, pp. 30–32) that the elements employed for the computation of Δ represent the observations of *Victoria* and *Sappho* for so many oppositions that no question can be entertained as to the accuracy of the values of Δ employed in the computation of the tabular parallax.

(b) The researches on the displacements of coloured stars, quoted at p. lxvii of the present work, prove conclusively that, in heliometer observing, the observer unconsciously *superposes the similarly coloured parts of the short spectra of stars formed by chromatic dispersion of the atmosphere, and thus eliminates the error which might otherwise be created by a systematic difference between the mean visual light of the comparison stars and that of the planet.*

When the original discussion of the resulting parallax from the combined observations of *Iris*, *Victoria*, and *Sappho* was made, the same evidence as now exists as to the freedom of heliometer observations from errors due to chromatic dispersion produced by the atmosphere was not available. Consequently, as *Iris* was suspected to be rather more ruddy in colour than the average comparison star, it was assumed safer to give half-weight to the *Iris* result as compared with those from *Victoria* and *Sappho*. This gave $8''{\cdot}802$ for the solar parallax, instead of

$$8''{\cdot}8036, \text{ with the probable error } \pm 0''{\cdot}0046,$$

which is the mean value when the combining weights are taken porportional to the reciprocals of the squares of the probable errors of each result—and which we must *now* regard as the definitive value of the mean solar parallax from the combined heliometer observations. More recently the Cape Observatory has made another interesting contribution to the determination of the solar parallax.

When Gill visited Potsdam in 1891, Dr Vogel showed him some of his photographs of stellar spectra under the micrometer microscope. After making a number of pointings, and finding they agreed *inter se* with extraordinary precision, Gill exclaimed : "Why, here is a fine method for determining the solar parallax"—his mind at that time being largely occupied with that problem. Vogel, after a moment's reflection, exclaimed : "Why, yes, of course." At a subsequent meeting of the Royal Astronomical Society, in June 1891, Gill gave a short account of his visits to various continental observatories, concluding his remarks as follows (*Observatory*, vol. xiv. p. 214) :—

> I was very much impressed with the apparatus (Vogel's spectroscope, etc.), and, having made a number of observations and measured a number of photographs of spectra which Dr Vogel had obtained with it, came to the conclusion, which I believe is not an extravagant one, that the work done by Professor Vogel with this apparatus is incomparably the most accurate yet done; so much so, that with a 25- or 30-inch telescope, well mounted, and a spectrograph similar to this, employing the largest dispersion that can be used, I believe that, by observation of the brightest stars, it will be possible to measure the velocity of the earth in its orbit so accurately that the solar parallax will be obtained in this way more correctly than by any other method. That is an enormous advance in exact spectroscopic work, and I hope that Potsdam will not be long before it has a telescope capable of doing all that I have suggested. I also hope that Potsdam will not be the only place whence we shall see such results.

Digitized by Google

Some members of the Society at the time expressed the view that Gill was over-sanguine in his expectations; but Gill's hopes have been to a great extent realized at the Cape.

Küstner of Bonn, however, was the first to publish results which gave direct proof of the practicability of the method. In his paper, "Eine spectro-graphische Bestimmung der Sonnen parallaxe" (*Ast. Nach.*, Bd. 169, pp. 241–264), published in July 1905, Küstner discusses his measures of 18 spectrograms of Arcturus, made in June and July 1904, and in the end of December and beginning of January 1905, determining the velocity in each case with reference to the same sixteen lines. The resulting value of the solar parallax is—

$$8''{\cdot}844 \pm 0''{\cdot}017,$$

or within $2\frac{1}{2}$ times its probable error of what we now know, within very narrow limits, to be its true value.* A no less important conclusion was, that, whereas when assumptions were made as to the absolute wave lengths of stellar lines the probable error of the velocity as determined from a single plate was $\pm 0{\cdot}6$ km. per second, that probable error was reduced to $\pm 0{\cdot}2$ km. when purely differential observations between different plates of the same star spectrum were made, to the exclusion of the effect of assumed wave length of the stellar lines.

Küstner's determination of the parallax was avowedly of the nature of a pioneer experiment, but he points out with much force the advantages of the method, urging its employment on the ground that it is one of the most important duties of astronomers to employ every possible method for the independent determination of all the relations between the fundamental constants of astronomy. But long before this work of Küstner's had been undertaken at Bonn, careful preparations had been made at the Cape to put the method to an exhaustive test.

When, in 1894, Mr Frank McClean made his splendid offer of a 24-inch refractor to the Cape Observatory (see p. 1), Gill's first thought was—"Now here will be an opportunity to try how accurately the solar parallax can be determined with the spectroscope." Gill devoted much time and thought to the design of the spectroscope, and Mr Horace Darwin added some beautiful details in the working drawings. There was long delay in delivery of the telescope, and still longer in that of the spectroscope. Then many experiments had to be made, and the whole spectroscope, after it was first sent to the Cape, had to be returned to Cambridge for structural alterations, such as the substitution of a four-prism train in the place of the original one of three prisms, and the surrounding of the whole in one air-tight enclosure with means for control and registration of the temperature. It was thus not until February 1906 that definitive work of taking the parallax plates could be begun, although an enormous number of spectrograms for miscellaneous purposes and experiments had been made.

Gill retired from the office of H.M. Astronomer at the Cape in February 1907. Dr J. Halm was appointed Chief Assistant in July 1907, and the measurement and reduction of the spectrograms was placed under his control by Gill's successor—Mr S. S. Hough.

The series of spectrograms for determining the solar parallax was completed in May 1908, and their measurement and reduction was finished and the results prepared by Dr Halm for press by the 6th October of the same year (*Cape Annals*, vol. x. part 3). The reader will there find full details of this admirable discussion. The principal, and by far the most satisfactory, series of measures was made with the now well-known Hartmann spectro-comparator, of which a full description is given by its inventor in the *Astrophysical Journal*, vol. xxiv. p. 285.

The method of observation was to bring those images of the star-lines of the standard star-plate, which are in the immediate neighbourhood of a particular iron-line of comparison, into coincidence with the corresponding lines in the spectrogram under measurement, and *then* to bring the images of the corresponding iron-lines on the two plates into coincidence. The difference between the readings for these two coincidences gives the difference of the radial velocity indicated by the two plates, expressed in terms of the micrometer screw. The equivalents of the screw, in km. per second, vary for different parts of the spectrum, but are easily determinable (*loc. cit.*, pp. 19C–22C). In each plate the star-lines in the neighbourhood of twelve iron-lines were measured, four standard plates were used for each star, and the absolute velocities for the standard plates were determined by comparison with the solar plates. The plates were taken at three epochs of quadrature for each star. The results were—

Star.	Epoch.	Radial Velocity.	Resulting Parallax.	Weight.	No. of Plates.
		km.			
α Tauri	1906·65	+ 54·258	8·832	20157	25
α Orionis	1906·75	+ 22·236	·835	26190	35
α Can. Min.	1907·31	− 4·071	·763	36837	61
β Geminorum	1907·13	+ 3·829	·783	16634	22
α Boötis	1907·15	− 4·881	·807	21788	55
α_2 Centauri	1907·33	− 23·188	·778	21305	54
α Scorpii	1907·01	− 3·083	·805	29825	50

* If one discrepant plate is excluded the parallax becomes $8''{\cdot}829 \pm 0''{\cdot}013$.

Digitized by Google

The probable error of a velocity derived from a single plate, so far as it depends on errors of pointing only, was found to be $\pm 0{\cdot}12$ km. On the other hand, if the probable error is derived from the inter-agreement of the above results, the probable error of a single plate is found to be $\pm 0{\cdot}40$ km.

The above values of the parallax are derived on the assumption that the radial velocities of all the stars change uniformly with the time—and on that assumption, having regard to the weights, Dr Halm found—

$$\text{Parallax} = 8''{\cdot}799 \pm 0''{\cdot}0068.$$

The assumption just made, however, is not strictly correct. The Lick observers (*Astrophys. Journal*, vol. xxv. p. 58) had shown that α Scorpii is a spectroscopic binary, and Dr Halm (*loc. cit.*, p. 56C) derives an orbit from a combination of the Lick and Cape observations. α Canis Minoris is also known to be a binary star, and its observed velocities at different epochs show some evidence that the epoch of the Cape observations lies close to the epoch of an apex in a sinoidal curve representing the true velocity of the star in the line of sight. It seemed to Dr Halm, therefore, reasonable to assume the change of radial velocity of α Canis Minoris to be proportional to a quadratic term in time, and to compute the changes of velocity of α Scorpii from the orbit derived by him from the combined observations of Mount Hamilton and the Cape. The mean result for the solar parallax then becomes

$$8''{\cdot}803 \pm 0''{\cdot}0057.$$

This latter result, which we venture to consider the legitimate outcome and definitive result of Dr Halm's discussion, is in exact agreement with, and very nearly of the same precision as, that derived from the heliometer observations of *Iris*, *Victoria*, and *Sappho*.

Dr Halm further shows (*loc. cit.*, p. 57C) that the measurements of the star-lines in each of the twelve different parts of the spectrum give the same value of the parallax within the limits to be expected from the probable error of each result. Computing the parallax separately from the velocities derived from the shifts in the neighbourhood of each of the twelve iron-lines, he finds in the mean the solar parallax

$$= 8''{\cdot}804, \text{ with the probable error } \pm 0''{\cdot}004,$$

where the probable error is derived from the inter-agreement of the twelve results.

This affords a strong confirmation of the systematic accuracy of the observations.

Important as these results are, they form but a preliminary part of what we may yet expect from the Cape; for Dr Halm writes (*loc. cit.*, p. 57C):—

> The present and future programme of the Victoria telescope embraces the determination of radial velocities of 365 stars, out of which at least 50 are suitable for solar parallax. Care has been taken in so arranging the observations that the spectra of these stars should be observed near their quadratures with the sun—a condition which may be complied with without endangering the continuity and progress of the general work.

It seems, therefore, that Gill's prediction as to the precision attainable by the spectroscopic method will, ere long, be fully realised from the Cape results alone, at least in so far as the figures above quoted really represent determinations of the solar parallax.

As a matter of fact, this is not strictly speaking the case. If the generally accepted theory of aberration is rigorously true, what these spectroscopic observations have determined is not the solar parallax, but the ratio of the mean velocity of the earth's motion round the sun to the velocity of light—in other words, the constant of aberration. But, as Dr Halm remarks—

> No stronger proof of the validity of Doppler's principle can be afforded than the fact that the velocity of the earth, as derived from the shifts of the lines of star-spectra, is practically identical with that found from the geometrical displacements of stars caused by the aberration of light. In this respect the outcome of the present investigation will no doubt strengthen our confidence in the correctness of the value of the solar parallax derived from either optical method.

Assuming the generally accepted theory of aberration to be true, the only assumptions made in deriving the solar parallax from the spectroscopic observations were—

(1) that the elements of the earth's orbit are known;
(2) ,, ,, velocity of light is 299860 ± 30 km. per. sec.;
(3) ,, ,, equatorial radius of the earth is $6377{\cdot}397$ km. (Bessel).

The effect of any possible outstanding error under (1) is quite insensible, and, even if sensible in particular cases, its effect on the mean result would be completely eliminated by the distribution of the observed stars in longitude.

Digitized by Google

The uncertainties in the determination of (2) and (3) cannot affect the resulting parallax by $\pm 0''\cdot002$. We have thus:

	Solar Parallax.	Probable Error.
From heliometer observations of *Iris*, *Victoria*, and *Sappho* . .	$8''\cdot8036$	$\pm 0''\cdot0046$
From Cape spectroscopic observations	8·8030	± 0·0057
Mean	8·8034	± 0·0035

This result is in very close agreement with that finally derived by Mr Hinks from his admirable reduction of the numerous observations of *Eros* at its opposition during the winter of 1900–1901, and which were communicated by him to the Paris Astrographic Congress in 1909, viz. :—

	Solar Parallax.	Probable Error.
From measures of the photographic plates of *Eros* . . .	$8''\cdot807$	$\pm 0''\cdot0028$
From direct micrometer measures of *Eros*	8·806	± 0·0040
Mean	8·8067	± 0·0023

The agreement is just within the probable error of each of the four above-mentioned results.

It may be pointed out, however, that, so far as the *Eros* results are concerned, it is by no means certain *a priori* that they are entirely free from the possibility of systematic error. If the mean light of *Eros* is redder than that of the average comparison star—even by an amount that is hardly perceptible to the eye,—the resulting solar parallax from direct measures with a filar micrometer or from photographic observations may be systematically affected to the extent of $0''\cdot005$ or even $+0''\cdot010$; but it is shown, p. lxvii, that this would not be the case when the observations are made with heliometers. The definitive settlement of this matter for the case of the *Eros* results can only be arrived at by the independent determination of the parallax from observations which, on the one hand, have all been taken at comparatively small zenith distances, and, on the other, at very large ones. If the values of the solar parallax as derived from two such series agree, then obviously the light of *Eros* has the same mean refrangibility, both for visual and photographic records, as the average comparison star; and, if the two results do not agree, the data exist for computing and eliminating the error. Mr Hinks has informed the writer that such data do not exist in the observations of *Eros* in 1900–1901,—it is therefore essential, in arranging the definitive programme for the very favourable opposition of *Eros* in 1931, to take care that observations are obtained at small opposite zenith distances (say + and − 25°), and at great opposite zenith distances (say + and − 65°). It is only by securing two such series of observations that any assurance as to the systematic accuracy of the final result can be obtained. In the meanwhile the freedom of the *Eros* result from systematic error must be considered to depend largely on its agreement with the result derived from the heliometer observations. But we may look forward with confidence to the further Cape spectroscopic determinations of the aberration constant, and afterwards to the opposition of *Eros* in 1931 for the definitive settlement of the great problem of the solar parallax. These observations should also decide the question whether the presently assumed law of aberration is rigorously true.

Meanwhile the most probable value of the solar parallax may be assumed to be

$$8''\cdot804,$$

and the corresponding value of the aberration constant is $20''\cdot47$.

DETERMINATION OF THE MASS OF THE MOON.

When the observations of *Iris*, *Victoria*, and *Sappho*, which have just been described, were planned, there was no intention of making any determination other than the solar parallax. But, when the corrections to the original ephemeris of *Victoria* were derived from comparison with the observations, it was found that when the values of O − C in R.A. and Dec. of the normal places for the various epochs were developed in powers of the time from opposition, the outstanding residuals were considerably larger then the otherwise known accidental probable errors would have led one to expect. Further examination, however, showed that the discordances in question would be very greatly diminished on the hypothesis of an inequality having a period of about 27 days.

Now, the point which describes an approximate ellipse in the Earth's motion round the Sun is not the centre of the Earth itself, but the centre of gravity of the Earth and Moon. Hence the centre of the Earth describes an orbit

Digitized by Google

around the common centre of gravity of the Earth and Moon, which is similar, on a much smaller scale,* to the orbit of the Moon around the Earth. This is, of course, the well-known "lunar inequality" in the Earth's motion, and the inequalities produced by it in the apparent positions of any celestial object will evidently attain their maxima and minima at the epochs when the Moon's geocentric longitude differs 90° from that of the object observed. That is precisely what the observed residuals of *Victoria* in x' ($= \Delta\alpha \cos\delta$) did show, as will be more obvious from inspection of the accompanying diagram, in which the observed values of x' for each normal place are represented by small discs, and the curve represents the computed values of x', derived from a preliminary discussion, made on the assumption that the tabular value of the constant of the lunar inequality employed in the ephemeris is incorrect.

But notwithstanding the great improvement in the representation of the observations by the introduction of a correction to the adopted value of the lunar inequality, the residuals (O − C) both in x' and y' are larger than they should be according to the weights of the determinations—the residuals amounting in some cases to between three and four times the theoretical mean error.† It is impossible with 7-figure logarithms to compute geocentric places which shall arithmetically represent the elements with an accuracy of 0″·01, nor can the heliocentric ephemeris of the Earth be computed with that precision by the data of Leverrier's "Tables du Soleil."

It appeared probable, therefore, that, with a more accurate ephemeris, beginning with a new heliocentric ephemeris of the Earth, in which the lunar perturbation is computed rigorously from the co-ordinates of the Moon,

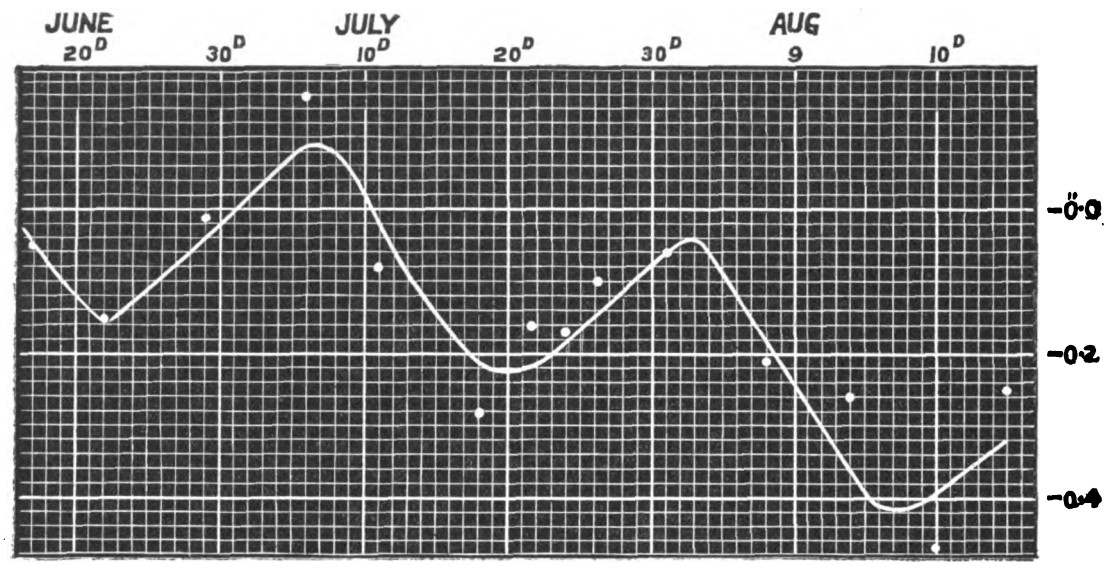

the *Victoria* observations would furnish a new and valuable determination of the lunar inequality of the Earth's motion, and thence, combined with the independently determined value of the solar parallax, the Mass of the Moon.

With great kindness Dr Tietjen undertook this work at the office of the *Berliner Jahrbuch*, where it was carried out under his direction, partly by Dr Bohlin and partly by Dr Kurt Laves; special perturbations of the Earth by *Mercury* were computed with ten-day intervals, and by *Venus*, *Mars*, *Jupiter* and *Saturn*, with twenty-day intervals. With the perturbations thus found, the places of the Sun given in the *Berliner Jahrbuch* for 10th June and 18th October were freed from perturbations, and the origin of the co-ordinates for these two dates was transferred from the centre of the Earth to P (the centre of gravity of the Earth and Moon). In this way two places of the Sun, referred to P, were obtained, which may be assumed to be situated on an undisturbed ellipse, one of whose foci is P. From the longitudes and radii vectores of these two places, elements of the ellipse were deduced, and then the places of the Sun in this ellipse were computed for every two days. The special perturbations were applied to the places of the Sun so computed, and thus the true places of the Sun, referred to the centre of gravity, P, were found.

From the Sun's co-ordinates thus calculated, and the heliocentric co-ordinates of *Victoria*,‡ an ephemeris of *Victoria* referred to the centre of gravity P was computed for every second day. Eight-figure logarithms were used throughout in the computations.

From this ephemeris the place of *Victoria* was interpolated for every day and corrected to geocentric place, assuming the Mass of the Moon to be $\frac{1}{83}$ and the mean solar parallax $= 8''{\cdot}88$.

* The ratio of these scales represents the ratio of the Mass of the Moon to that of the Earth.

† The maximum residual amounted in one instance to 0″·13; these residuals of course include the combined errors of the heliometer observations, the star places, and the outstanding accidental errors of the ephemeris.

‡ For the derivation of the elements of *Victoria*, by Dr Bohlin, from which the heliocentric co-ordinates were computed, see *Cape Annals*, vol. vi. part 2, pp. 248 and 440.

Digitized by Google

The whole of the computations were repeated at the Cape *de novo* from the new ephemeris, and five small errors were found and corrected in the original interpolations of the declinations, as also errors in one coefficient in each of three of the equations. A term depending on the lunar inequality was introduced into all the equations; and, after a full re-discussion of the weights of the observations and of the personal corrections depending on the reciprocal of the measured distances, the equations were finally solved (see *loc. cit.*, pp. 446–538). This solution (*loc. cit.*, p. 535) showed that the value of μ' (which signifies the number of tenth parts that the tabular value of the constant of the lunar equality has to be increased) is

$$\mu' = +0{\cdot}0664 \text{ probable error } \pm 0{\cdot}0137.$$

The tabular constant employed in computing the corrections of *Victoria* to geocentric place was *

$$\kappa_0 = \frac{\text{Tabular value of } \odot^r \text{ parallax}}{\text{Tabular reciprocal of Moon's Mass} + 1} = \frac{8{\cdot}88}{84} = 0{\cdot}10571.$$

The true value of this constant will therefore be

$$\kappa = \kappa_0 \left(1 + \frac{1}{10}\mu'\right) = 0{\cdot}10642 \pm 0{\cdot}000145.$$

To derive the mass of the Moon, we have

$$\mu_, + 1 = \frac{\pi}{\kappa}$$

where $\mu_,$ is the true reciprocal of the Mass of the Moon and π is the true value of the solar parallax.

If π be assumed $= 8''{\cdot}80$, we get

$$\text{Mass of the Moon} = \mathrm{M} = 1 \div (81{\cdot}691 \pm 0{\cdot}113 + 9{\cdot}40\,\Delta\pi).$$

Or if we adopt $\Delta\pi = +0{\cdot}004$, from last section, the Moon's Mass becomes

$$\mathrm{M} = 1 \div 81{\cdot}73 \text{ probable error } \pm 0{\cdot}113.\dagger$$

The substitution of the value of μ' and the values of the other quantities (which express the variation of the errors of the ephemeris and the personal errors) in the original 311 equations leads to normal places of *Victoria* for various epochs, the comparison of which with the ephemeris, and their rigorously computed weights, are as follows (see *loc. cit.*, p. 503):—‡

	$\Delta\alpha \cos\delta$ O—C.	Weight.	$\Delta\delta$ O—C.	Weight.
	"		"	
June 8	+ 0·07	4·9	− 0·04	3·6
17	+ ·04	11·6	+ ·01	12·7
22	− ·03	16·0	− ·01	18·8
29	− ·02	13·5	+ ·02	35·1
July 6	+ ·03	11·0	·00	15·9
11	− ·01	10·5	− ·05	11·9
18	− ·04	18·5	− ·03	22·2
21·5	+ ·05	15·0	− ·01	12·6
24	+ ·02	20·4	+ ·03	25·1
26	− ·01	12·0	− ·02	11·6
Aug. 1	+ ·01	41·1	+ ·01$_5$	37·4
7	− ·07	15·6	− ·02	19·0
13	− ·02	21·7	+ ·01$_5$	23·3
19	+ ·01	14·8	− ·01$_5$	19·4
24	·00	10·1	+ ·01	12·8

The representation of the observations is now entirely satisfactory, and the expectation expressed at p. xlviii, viz., "it would therefore be possible to trace the path of the planet in the heavens during nearly three complete revolutions of the Moon about the Earth with an accuracy equalling that of the determination of a star's parallactic ellipse," is thus amply justified. The results of the comparison are shown in the accompanying figure (p. lxxxiii).

* The actual formulæ are given *loc. cit.*, pp. 440–441.

† In *Cape Annals*, vol. vi. p. 537, the probable error is given in mistake $= \pm 0{\cdot}082$.

‡ The *assumed mean error* of an observation of weight unity was $\pm 0''{\cdot}20$; the actual results from the squares of the residuals, viz., is $[pvv] = 11{\cdot}5047$; $m = 18$; hence $\frac{[pvv]}{n-m} = 0{\cdot}03933$; the *actual mean error* of an observation of weight unity is therefore $\pm 0''{\cdot}198$—a sufficiently close agreement.

Digitized by Google

Mr Hinks (*Monthly Notices, R.A.S.*, vol. lxx. pp. 63–75) gives the general results of his determination of the Mass of the Moon from the observations of *Eros* at its opposition 1900–1.

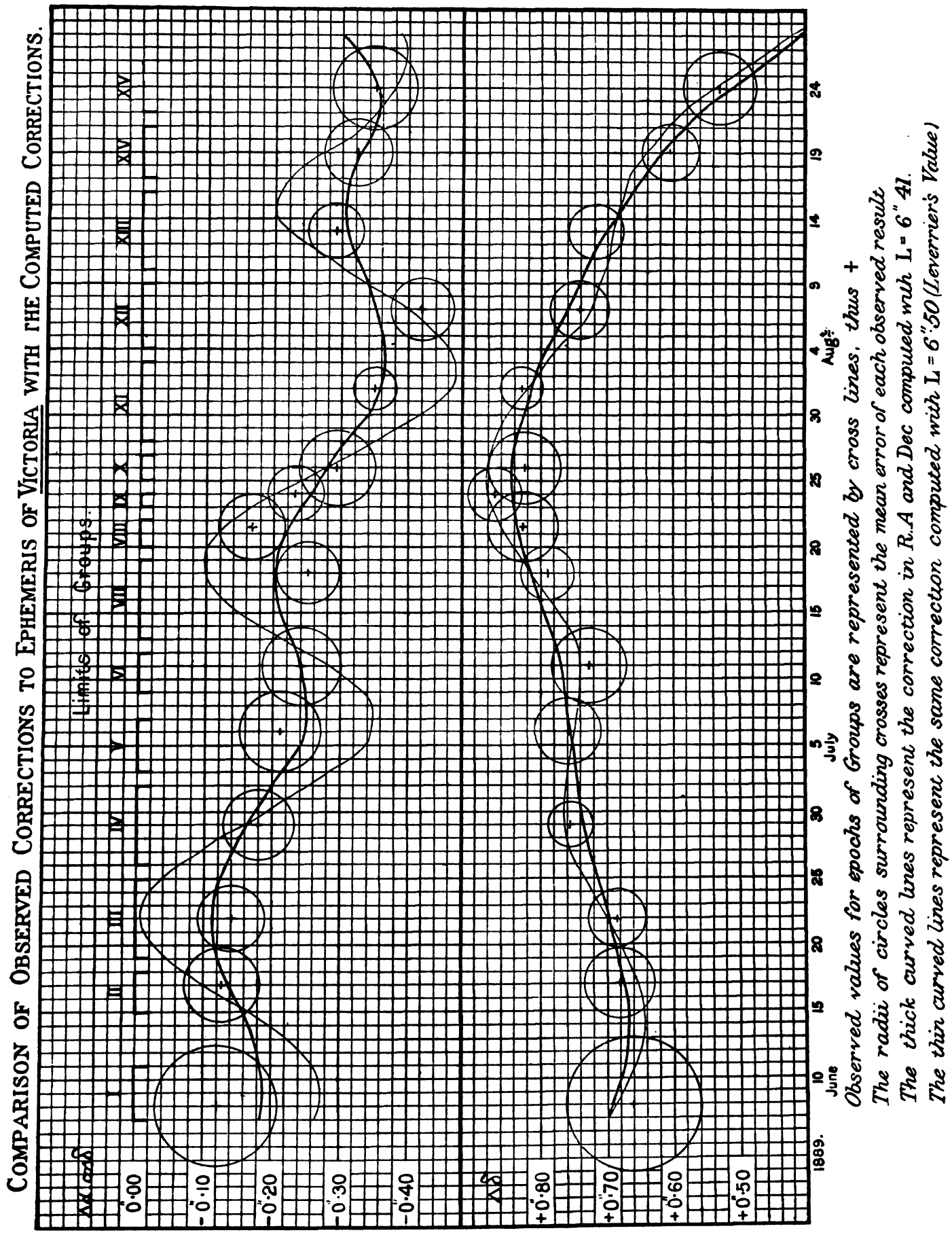
COMPARISON OF OBSERVED CORRECTIONS TO EPHEMERIS OF VICTORIA WITH THE COMPUTED CORRECTIONS.
Limits of Groups.
I II III IV V VI VII VIII IX X XI XII XIII XIV XV
Δα cos δ
Δδ
0·00
-0·10
-0·20
-0·30
-0·40
+0·80
+0·70
+0·60
+0·50
June
July
Aug.
1889.
Observed values for epochs of Groups are represented by cross lines, thus +
The radii of circles surrounding crosses represent the mean error of each observed result
The thick curved lines represent the correction in R.A and Dec computed with L = 6″·41.
The thin curved lines represent the same correction computed with L = 6″·50 (Leverrier's Value)

He obtains

$$M = 1 \div (81{\cdot}53 \text{ prob. error } \pm 0{\cdot}047.)$$

The probable error of this result, however, does not seem to be rigidly computed, and the true probable error is apparently greater than the above. A rigid estimation of the probable error is impossible from the data as yet published, but, so far as one can judge from the published data, the probable error may be taken

Digitized by Google

at not far from double that above quoted, or only a little less than that derived from the observations of *Victoria*.

In estimating the relative possibilities of the heliometric and photographic methods, it must not be forgotten that the geometrical conditions were enormously in favour of *Eros* as compared with *Victoria*, as will be seen from the following statement of the distances of these planets from the Earth during the periods of observation.

VICTORIA.		*EROS.*	
Δ	*Mean.*	Δ	*Mean.*
1899 June 19 0·91		1900 Oct. 1 0·57	
July 2 0·85		„ 31 0·48	
„ 19 0·83	0·88	Nov. 30 0·33	0·41
Aug. 6 0·86		Dec. 30 0·31	
„ 26 0·96		1901 Jan. 30 0·34	

The comparison may be put into a few words, viz., that *Eros* was at less than half the distance of *Victoria* from the Earth, and that the observations were continued for nearly twice as long a period of time. On the whole, one may reasonably assign weight 2 to the *Eros* result and weight 1 to that from *Victoria*, especially because in the photographic determination of the lunar inequality the effect of chromatic atmospheric dispersion does not systematically affect the resulting value of the lunar equation, even if there is sensible difference in the mean wave-length of the light of *Eros* from that of the comparison stars. We have thus for the most probable value of the Mass of the Moon

$$\mathbf{M = 1 \div 81{\cdot}60.}$$

From the point of view of the Cape astronomer it was a bitter disappointment that the high Northern Declination of *Eros* in 1890–91 rendered it impossible for him to make useful observations with the heliometer or astrographic telescope. But it has been a source of great delight and satisfaction to him that the labours of his colleagues in the Northern Hemisphere, and their admirable discussion by Mr Hinks, have led to results for the solar parallax and Mass of the Moon from the *Eros* observations which agree within such narrow limits with those derived from the heliometer observations of other minor planets, under conditions of far less geometrical advantage.

In 1931, however, the conditions in the two hemispheres will be reversed.

The positions of *Eros* will be * :—

1931 January 30	$\alpha = 10^h\ 32^m$	$\delta = -\ 4^\circ\ 21'$
March 30	9 50	−23 20
March 31	9 22	−20 28

Early in February the minimum distance of *Eros* from the Earth will be 0·177, *or less than half its minimum distance in* 1900–1 ; and otherwise, also, the conditions for determination of diurnal parallax will be in an extraordinary degree favourable at southern observatories, since the planet will culminate not far from the zenith of many of them.

The maximum horizontal parallax of *Eros* in 1931 will be 50″, as compared with 10″·5 for *Victoria* in 1889 ; so that, *ceteris paribus, observations for the diurnal parallax of Eros on a single night in February* 1931 *will have the same weight as equally good observations of Victoria in* 1889 *on* 22 *nights.*† The opportunity thus offered for a definitive determination of the solar parallax, the Mass of the Moon and their allied constants, is one of supreme interest and importance to astronomy.

DETERMINATION OF THE MASS OF JUPITER AND THE ELEMENTS OF THE ORBITS OF THE OLDER SATELLITES.

Soon after Gill's appointment to the Cape in 1879 he had a long discussion with the late Professor J. C. Adams on the subject of the kind of observations required to improve the tables of the motions of Jupiter's Satellites.

Adams explained that he was then engaged in an endeavour to correct Damoiseau's tables of Jupiter's Satellites, with a view to their extension beyond the year 1890, but that there were no existing observations from

* Millosevich, *Bulletin du Comité Permanent de la Carte du Ciel*, 1909, p. 34B.

† In 1889, with observations not specially arranged for employment of the diurnal method, the solar parallax was determined by E. and W. observations of *Victoria*, with a probable error of ±0″·0108 from Cape heliometer observations only (see p. lxxiv), notwithstanding that the declination of *Victoria* was not so favourable as will be that of *Eros* in 1931. *Eros*, from similar but specially arranged observations with the Cape heliometer alone, should, in 1931, yield a value of the solar parallax with a probable error of ±0″·002 or less.

Digitized by Google

which the Inclinations and Nodes of the orbits could be satisfactorily determined. The Jovicentric Longitudes of the Satellites could be determined with considerable precision from numerous observed eclipses, but there were no observations from which the corresponding Latitudes could be satisfactorily derived. He suggested that measures should be made, with a filar micrometer, of the difference of declination between the limbs of Jupiter and the projected shadows of Satellites in transit. Gill's view was that the limbs of planets did not lend themselves to very accurate bisection, and he believed that accurate heliometer observations of position angles and distances of the Satellites with respect to each other would better fulfil Professor Adams' object, whilst such observations would also contribute to the determination of the other elements of the system, and in particular would give a very accurate determination of the Mass of Jupiter if the scale value of the heliometer could be determined with adequate precision.

Gill promised to make a practical trial of the method, but was prevented from doing so, as will be subsequently seen, until the autumn of 1891.

Heliometer measures had been employed by Bessel (1832–39), by E. Luther (1856), and by Schur (1874–80) to determine the Mass of Jupiter; but in all these observations the image of the Satellite had been referred to the centre of Jupiter or to the opposite limbs of the planet, and that form of "pointing" is not capable of the highest precision. The results were not very satisfactory. Bessel found that the probable error of an angle, as observed with his heliometer, between a Satellite and the centre of Jupiter was $\pm 0''\cdot 20$. If Bessel had observed the mutual distances and position angles of the Satellites instead of referring them to Jupiter, there is no doubt but that he would have attained the same accuracy as he did in observing stellar distances, viz., a probable error of $\pm 0''\cdot 10$ for the single measure, and with much greater certainty of avoiding systematic error.

The first astronomer to observe the co-ordinates of Satellites relative to each other was Hermann Struve, who, in his classical investigation of the orbits of the Satellites of Saturn, adopted this method, employing a filar micrometer attached to an equatorial telescope: and he attained results of far higher accuracy than had ever before been reached in work of the kind.

The Cape researches for stellar parallax with the 4-inch heliometer, the subsequent dismounting of that instrument in preparation for building the observatory of the new 7-inch heliometer on the same site, the erection, adjustment, and preliminary experiments with the new instrument, which were immediately followed by the stellar-parallax campaign, the investigation of division errors of the scales, the observations of *Iris*, *Victoria*, and *Sappho* (1888–89), and the triangulation of the *Victoria* comparison stars in 1890, together with a visit to England in 1891, prevented the fulfilment of Gill's promise until his return to the Cape in August of the latter year. The series of observations of Jupiter's Satellites made on Gill's return to the Cape extends from 1891 August 17 to December 14. Observations were secured by Gill on 35, and by Finlay on 11 nights.

The programme was to measure on each night all the available mutual distances and position angles of Jupiter's four principal Satellites—in all six measures of distance and six of position angle. Of course it sometimes happened that clouds prevented the completion of the observations, and sometimes one, or more, of the Satellites was occulted by the planet, or was invisible on its surface, or was eclipsed.

The observations actually secured were the following:—

	Distances.		Position Angles.	
	Gill.	Finlay.	Gill.	Finlay.
Satellites I. and II.	30	6	29	6
I. and III.	26	8	26	8
I. and IV.	24	7	24	7
II. and III.	25	7	26	7
II. and IV.	27	8	26	8
III. and IV.	35	10	30	10
Totals	167	46	161	46

Each complete observation consisted of four pointings in distance and four in position angle, arranged as follows:—

1. One pointing in position angle, and turn the reversing prism 90°.
2. One pointing in position angle.
3. One pointing in distance, and turn the reversing prism 90°.
4. One pointing in distance.

5–8. Reverse semi-lenses and repeat the same operations in reverse order.

Digitized by Google

In a few cases double the above number of pointings were made. Arranged in this way, the mean epochs of the measures in distance and position angle will be nearly the same, the latter being therefore easily reduced to the former by the known value of $\frac{\delta p}{\delta t}$.

The heliometer cannot give *absolute* determinations of distance and position angle, because the scale value, the index error, and the equatorial adjustment change with temperature as well as from other causes. (See *Cape Annals*, vol. vi. part 1, pp. 9–11.)

An exceedingly accurate scale value is essential for determining the Mass of Jupiter. Other conditions being equal, the greater the mass of a planet the less is the proportionate precision with which that mass can be determined by observations of its satellites. In any case, if the adopted scale value used in reducing the observed distances between the satellites is systematically n per cent. in error, the resulting value of the mass will be 3 n per cent. in error. On these grounds Newcomb (*Astronomical Constants*, p. 98) writes :—

> For reasons founded on the construction and use of the heliometer, I doubt whether the absolute measures made with those forms of that instrument which have been used in determining the Mass of Jupiter can be relied upon within their three-thousandth part. If so, the determination of the mass of the planet itself would be doubtful by its thousandth part in each separate case.

It is on these grounds that Newcomb, in his summary of the determinations of the Mass of Jupiter (*loc. cit.*, p. 97), gives only weight 1 to all observations of the Satellites, whilst he gives a combined weight of 43 to its mass as derived from the action of the planet on Saturn, certain comets and minor planets.

His conclusion is that the Mass of Jupiter is $1 \div 1047{\cdot}35$, of which the probable error is but one part in 26,000.

To reach a corresponding accuracy with heliometer observations it was therefore necessary to devise means for securing the *systematic* accuracy of the scale value with a probable error not much more than 1 in 100,000. A pair of standard stars was accordingly selected not far from Jupiter at its Opposition in 1901, whose position angle corresponded nearly with that of the plane of the Satellites (viz., the Stars S.D. $-8^{\circ}{\cdot}5905$, mag. 7·0, and S.D. $-7^{\circ}{\cdot}5838$, mag. 6·2), and these were measured in s and p before and after the observations of the Satellites, or in the middle of those observations : this was done on every night of observation. The delicate question then arises, how are the absolute distance and position angle of these stars to be determined? Probably there are no two stars in the sky whose relative positions have been so accurately determined for the epoch 1891–92 as the standard stars employed in the triangulation of the *Victoria* comparison stars in 1890. Their definitive co-ordinates resulted from the complete discussion of the meridian observations, made at twenty-two observatories, combined with the heliometer triangulation. The probable errors of these stars in R.A., declination, and proper motion were :

	In R.A.	In Dec.	μ and μ'.	Epoch.
Star p	$\pm 0''{\cdot}020$	$\pm 0''{\cdot}025$	$\pm 0''{\cdot}011$	1889·55
,, t	$\pm 0''{\cdot}021$	$\pm 0''{\cdot}025$	$\pm 0''{\cdot}011$	

The Jupiter standard stars were therefore compared by heliometer measures in distance and position angle with the *Victoria* standards, and there resulted as the mean of nine observations in distance and three in position angle (equinox 1891·0; epoch 1891·75):

$$s = 6705''{\cdot}36 \pm 0''{\cdot}065 \; ; \; p = 68^{\circ}\ 4'\ 30'' \pm 2''{\cdot}1.$$

(These probable errors include the probable error of the heliometer observations and of the co-ordinates of the *Victoria* standards.)

The Jupiter standards were also observed with the Cape transit circle on fifteen nights (*Cape Catalogue for 1890*), and from these observations, for the same equinox and epoch, these resulted :

$$s = 6705''{\cdot}29 \; ; \; p = 68^{\circ}\ 4'\ 32''.$$

The latter result is practically little more than a satisfactory confirmation of the first, which responds to the required systematic precision, the probable error of scale value being less than $1 \div 100{,}000$. Gill was so occupied with the reduction of the *Victoria* and *Sappho* observations, the observations for stellar parallax, and the general administrative work of the observatory, that these heliometer observations had perforce to remain unreduced for nearly seven years.

Soon after Mr de Sitter's arrival at the Cape, Gill suggested to him that he might take up the reduction and

Digitized by Google

discussion of these heliometer observations as a very appropriate subject for his Dissertation for the degree of Doctor of Science at the University of Groningen.*

The suggestion was accepted. He had the aid of members of the observatory staff for the examination of his computations and for the heavy work of the formation and solution of the normal equations. But the plan of the investigation, apart from that of the observations on which it is based, and the final responsibility for its accuracy rest entirely on Dr de Sitter. The results, after final revisal by De Sitter on his return to Groningen, were published by him, as his "Inaugural Dissertation," under the title *Discussion of Heliometer Observations of Jupiter's Satellites, made by Sir David Gill, K.C.B., and W. H. Finlay, M.A.*; by W. de Sitter, Groningen. (J. B. Wolters, 1901.) The details of these observations have not yet been published. It is intended that they shall appear in Part I. of Vol. XII. of the *Cape Annals*, and that this work shall also contain a revised edition of Dr de Sitter's original Dissertation. The results from these observations gave strongly determined corrections of considerable amount to the Inclinations and Nodes of all the Satellites, and a very accurate determination of the Mass of Jupiter. But it was necessarily impossible to determine accurately the motions of the nodes and perijoves, the inequalities in the longitudes and radii vectores of the Satellites, or the amount and period of the libration,† without observations made over a much longer period of time—and these data are necessary for determining the dynamical compression of Jupiter and the Masses of the Satellites.

Accordingly, when Mr Bryan Cookson came to the Cape in 1901,‡ after he had obtained some practical

* Professor de Sitter's connection with the Cape Observatory is described in the following extracts from one of his letters addressed to Sir David Gill:—

"We first met on the 2nd of October 1896. I was then a student in Groningen, and was working in Kapteyn's laboratory, making the measures which are discussed in the *Groningen Publications*, Nos. 2 and 3. You were on a visit to Kapteyn, and I remember the circumstances very well—you came to the laboratory with Kapteyn and looked at the plates and the measuring microscope at which I was working, and had some conversation with me. Next morning I was having some breakfast in my rooms when a message came from the laboratory that you wanted to speak to me.

"Professor Kapteyn was lecturing in the lecture room, but Mrs Kapteyn came to assist occasionally as interpreter of my (then) imperfect English. You asked if I would come to the Cape as a computer, and thereby complete my astronomical education—or rather begin it, for up to that time I had never made a speciality of astronomy and intended to become a mathematician.

"It was agreed, after consultation with my parents, that I should first pass my examinations preparatory for the Doctor's degree, and then come to the Cape. I reached the Cape on 1897 August 27 and left it on 1899 December 6. I came with the intention of making parallax observations with the McClean telescope. The telescope, however, as you know, was not completed in time. Beyond a very few occasional observations of meteors, comets, occultations, etc., the observational work I did at the Cape consisted of the photometric work (described *Groningen Publications*, 12) and the heliometer observations, viz., parallax of four stars, observations of red stars, and a part of the polar triangulation.

"The reduction of the parallax observations was entrusted to me in my position as a computer. And finally I began, under your auspices, my work on the Satellites of Jupiter."

On the retirement of Professor H. G. v. d. Sande Bakhuyzen, his office was divided into two parts; one the Directorship of the Observatory, with a Professorship of Practical Astronomy, the other the Chair of Astronomy in the University. Dr de Sitter was appointed to the latter post.

† Between the longitudes, l, and the motions, n, of the three inner satellites, there exist the well-known relations:—

$$n_1 - 3n_2 + 2n_3 = 0$$
$$l_1 - 3l_2 + 2l_3 = 180^\circ$$

These expressions are rigorously true if the *mean* values of the daily motions and of the longitudes are considered. But Laplace found theoretically that the difference between the *actual values at a particular epoch* from the *mean values* can be expressed by a periodic inequality which he called "the libration," and which is distributed amongst the Satellites in a fixed proportion. Delamble actually found $180^\circ + 0^\circ{\cdot}0176$ (Laplace, *Mechanique Celeste*, vol. iv. p. 136), but he neglected the difference from 180° as being within the uncertainty of its determination. De Sitter found, from Gill's heliometer observations (1891·75) $180^\circ - 0^\circ{\cdot}1568 \pm 0^\circ{\cdot}0125$ (*Groningen Publications*, 17, p. 2), whence it would appear that the Laplace libration is real and measurable.

‡ Bryan Cookson, after having taken his degree at Oxford, travelled for two years, and near the close of his tour of the world he visited the Cape Observatory. His tastes had always inclined him towards astronomy, and he there and then decided that, should his father concur, he would follow out a post-graduate course in astronomy at Cambridge and then come to the Cape Observatory for practical experience. Accordingly, he came to the Cape in 1901, and, at Gill's suggestion, made the two above-mentioned series of heliometer observations of Jupiter's Satellites, and, after his return to England, he reduced the measures of thirty-five photographic plates of Jupiter and his Satellites, which had been made at the Cape during the opposition of 1902. During his stay at Cambridge, from 1898 to 1901, as an advanced student, he designed and had constructed a new form of photographic zenith telescope (described *Monthly Notices, R.A.S.*, March 1901), and on his return there from the Cape he made a series of observations with the instrument to determine the constant of aberration. These photographs taken with the zenith telescope had been completely measured and reduced, but the discussion was unfinished. The duty of completing its preparation for press was undertaken by his colleagues, and the work is now published (*Mem. R.A.S.*, vol. lx. p. 83). The zenith telescope itself was given to Cambridge Observatory, and has been lent by Sir Robert Ball to the Greenwich Observatory for seven years, where it is now being employed in similar research under the direction of the Astronomer Royal. As his work with the zenith telescope approached completion, Cookson turned his attention to astrophysics, and in 1908 he was appointed to the newly created post of Assistant in Astrophysics at Cambridge. In conjunction with his uncle, Professor Newall, he then began the extensive laboratory researches on spectra, obtained under varying conditions, which were in progress when, in June 1909, the illness began which caused his death, after much suffering, on 13th September 1909. The writer has thus lost a very dear friend, and astronomy one of its most promising followers, at the early age of thirty-five years.

Digitized by Google

experience in the general use of astronomical instruments, he undertook, on Gill's suggestion, to make heliometer observations of Jupiter's Satellites at the two next oppositions of the planet.

The observations were made on 39 nights, between June 24 and September 27, in 1901, and on 48 nights, between June 10 and October 5, in 1902.

The total number of observations secured was 1037, divided as follows :—

	Standards.	I.-II.	I.-III.	I.-IV.	II.-III.	II.-IV.	III.-IV.	Standards.
	s. *p.*	*s.* *p.*	*s.* *p.*	*s.* *p.*	*s.* *p.*	*s.* *p.*	*s.* *p.*	
1901	36 37	29 30	27 28	28 28	27 28	30 30	27 27	27–28
1902	40 40	35 35	38 38	33 33	37 37	37 37	43 43	22–22

The standard stars employed in 1901 were 24 and 26 Sagittarii. Recent meridian observations at seven observatories (1895-1903) give

$$\Delta\alpha = 7^m\ 58^s{\cdot}731\ ;\ \Delta\delta = 10'\ 49''{\cdot}34^*\ \text{for 1901–0.}$$

Earlier observations at eight observatories (1750–1890) were communicated by Mr W. J. Thackery and reduced with the systematic corrections and weights of Newcomb's Fundamental Catalogue to 1900·0. Equations were then formed, and solved by least squares to derive the places for 1900 and the proper motions. After applying precession and proper motion, the following results were found :—

$$\Delta\alpha = 7^m\ 58^s{\cdot}732\ ;\ \Delta\delta = 10'\ 50''{\cdot}09^*\ \text{for 1901–0.}$$

The values for $\Delta\alpha$ are in excellent agreement, but the values of $\Delta\delta$ differ by 0″·75! This discordance in $\Delta\delta$ only affects the distance by one-tenth of its amount, but considerably affects the position angle.

The finally adopted values were :

$$\Delta\alpha = 7^m\ 58^s{\cdot}731\ ;\ \Delta\delta = 10'\ 49''{\cdot}53.\ \dagger$$

corresponding to $s = 6591''{\cdot}364$; $p = 84^\circ\ 20'\ 40''$ for 1901·0.

The standard stars employed in 1902 were 21 and 23 Capricorni.

Recent observations at eight observatories (1895–1903) reduced to 1902 give :

$$\Delta\alpha = 5^m\ 5^s{\cdot}478\ ;\ \Delta\delta = 17'\ 26''{\cdot}90\ \text{for 1902·0.}$$

Earlier observations at ten observatories (1800–1902),‡ reduced to 1902·0, and discussed by least squares for place and proper motion, gave :

$$\Delta\alpha = 5^m\ 5^s{\cdot}455\ ;\ \Delta\delta = 17'\ 27''{\cdot}18\ \text{for 1902·0.}$$

Giving weights 3 and 1 to the recent and earlier observations respectively, the following values were adopted :—

$$\Delta\alpha = 5^m\ 5^s{\cdot}472\ ;\ \Delta\delta = 17'{\cdot}26''{\cdot}97.\ \S$$

The corresponding distance and position angle are :

$$s = 4487''{\cdot}355\ ;\ p = 76^\circ\ 30'\ 32''.$$

It will be evident that in accuracy of fundamental determination both these pairs of standard stars are very inferior to those employed in 1891.

But in determining the Mass of Jupiter it is not only necessary that the distance of the scale-value stars should be absolutely known—it is not less necessary to know that the smaller distances measured with the heliometer—from 0″ to 1000″—shall be in reality strictly proportional to their nominal value as expressed in terms of the heliometer scale. Gill had proved conclusively from his observations in the *Victoria* triangulation and in the discussion of the observations of *Victoria* itself that, not only theoretically, but practically, all observed distances with modern heliometers derived from observations of standard stars required the correction

$$\delta s = s \sin^2 \tfrac{1}{2}\psi = \frac{\kappa^2}{2s},$$

where s is the distance measured, and ψ and κ are defined below.

* The corresponding values from Boss' General Catalogue are :

$$\Delta\alpha = 7^m\ 58^s{\cdot}731\ ;\ \Delta\delta = 10'\ 50''{\cdot}06.$$

† This results from giving weight 3 to the recent and weight 1 to the earlier observations. If the values $\Delta\delta$ from the discordant values of Pulkowa and Charkow are rejected, the value of $\Delta\delta$ from the recent observations becomes 10′ 49″·57.

‡ Bradley's values for $\Delta\alpha$ and $\Delta\delta$ are considerably discordant, and were rejected.

§ The corresponding values for Boss' General Catalogue are :

$$\Delta\alpha = 5^m\ 5^s{\cdot}464\ ;\ \Delta\delta = 17'\ 26''{\cdot}37.$$

Digitized by Google

The observer does not superpose the two images under observation, but places them so as to form a close double star whose position angle is parallel to a pair of wires in focus of the object glass and eye-piece at right angles to the line of separation of the semi-lenses. To produce this effect the heliometer tube is turned in position angle through an angle ψ from the true position angle p, so that the double star so formed has a distance $=\kappa$. After the first pointing in distance the star-images are "crossed through" by turning the tube to a position angle $=p-\psi$, instead of $p+\psi$. Observers differ in their habit of observing. Gill always made κ as small as possible, Finlay preferred a wider separation, and Cookson observed nearly in the same way as Gill.

For different values of κ the corrections are as follows :—

κ.	50″.	100″.	200″.	500″.	1000″.
2″·5	0″·062	0″·031	0″·016	0″·006	0″·003
3·0	·090	·045	·022	·009	·004
3·5	·122	·061	·031	·012	·006
6·7	·449	·224	·112	·045	·022

In the observations of the Satellites, Gill observed κ for the very short distances, and from these observations De Sitter derived the following values of κ :—

		κ	
For definition 1, steadiness 1–2		2″·59	3 observations
,, ,, 2, ,,	2–3	2″·91	12 observations
,, ,, 3, ,,	3–4	3″·55	5 observations

The influence of the sharpness and steadiness of the images is very marked; in fact, when the images are very bad or disturbed it is impossible to estimate the apparent position angle of the artificial double star when the discs are closer than 3″.

Finlay's directly observed values of ψ were not sufficiently numerous to distinguish between his value of κ in different conditions of definition; his mean value for κ was 6″·67. Terms depending on κ as an unknown quantity were introduced in the discussion of the observations of Jupiter, so that the mean value of κ was determined independently for both Gill and Finlay, viz. :—

$$\kappa_G = 2''\cdot95\ ;\ \kappa_F = 7''\cdot89.$$

The agreement is practically absolute, having regard to the small number (5) of observations on which the measured value of κ_F depends.

Cookson, to make quite certain of the correction depending on κ, observed ψ with every pointing in distance, so that every observation could be at once corrected for an exact instead of a mean value of κ, and thus no terms depending on κ had to be introduced into his equations of condition.

His values of κ derived from the observations were :

		1901.	1902.
For images 1 or 1–2, steadiness 2–3 ; κ		$=2''\cdot33$	2″·44
,, ,, 2 or 2–3, ,,	2 to 3 to 4	$=2''\cdot81$	3″·07
,, ,, 3 or 3–4, ,,	3–4	$=2''\cdot77$	3″·70

which are very similar in amount to the values of κ employed by Gill.

The very important question now arises, whether, after application of the corrections depending on κ, the observations are really free from systematic errors. It must be remembered that the elements of the orbits are the outcome of measured distances and position angles of every possible variety. Thus the elongation of the fourth relative to the third Satellite may depend upon a measured distance of about 200″ or 900″, according as the third Satellite is at elongation on the same or the opposite side of the planet. Or, again, if two satellites are simultaneously in any plane which is parallel to Jupiter's axis, which plane also passes through the Earth, the difference of latitude between these Satellites can be determined entirely by measures of short distances or by measures of position angle from the other two Satellites. These are, of course, somewhat exceptional conditions, but when we also remember that the relative longitudes of all the Satellites are chiefly determined by measures of every variety of distance, and if the residuals from the complete discussion of the hundreds of heliometer observations made in each of the three series of 1891, 1901, and 1902 show no systematic errors depending on the distance, it becomes certain that no such systematic errors exist. De Sitter (*Dissertation*, p. 64) and Cookson (*Cape Annals*, vol. xii. part 2,

Digitized by Google

p. 174) give tables of the residuals arranged in mean groups in order of distance, and neither for Gill and Finlay* nor for Cookson† is there shown the slightest trace of systematic error which is a function of the distance measured, at least for distances from 3″ to 960″.

In the years 1897–1900 a heliometer triangulation of the Southern circumpolar area was made, the observers being Messrs Goodman, Löwinger, and De Sitter. The results, discussed by Mr S. S. Hough, are published in the *Cape Annals*, vol. xi. part 1.

Mr Hough found in this discussion that a self-consistent geometrical figure could be built up out of this series of distances, ranging from 917″ to 7299″, only by assuming that the directly computed instrumental distances required a correction which could be analytically expressed by the formula

$$x + ys + zs^2.$$

The term in s^2 is the only term of importance, and the correction became zero for distances of a little over 1000″.

Mr Hough found that when the distance s was expressed in terms of 1000″ as unit, the coefficient z had the following values:—

Löwinger	+0·0224	mean 0·0210
Goodman	+0·0169	
De Sitter	+0·0238	

Mr Cookson remarks on this: "If my observations are affected by a similar error, the measured distances of the Satellites would require a correction of 0″·005, whilst those of the standards for 1901 would require a correction of as much as 0″·911. If this error existed unknown to the observer, the effect would be the same as that of adopting a distance of the standards which was in error by 0″·911—*i.e.* by nine times the limit arrived at."

Mr Cookson could only prove from the residuals in his discussion his observations of the Satellites of Jupiter that the scale value (after corrections depending on κ) was uniform for all distances up to nearly 1000″, and he was anxious to determine whether it was certainly so up to distances of 7000″.

Accordingly, he revisited the Cape Observatory with the British Association in 1905, and made the necessary observations in August and September of that year.

The following twelve zones of stars (the component stars of each of which are situated as nearly as possible in a great circle) were chosen, the successive measured distances being as follows:

Zone.	Observed Distances.						No. of Obs.	C.	O – C.	z.	Weight of z.
	1–2.	2–3.	3–4.	4–5.	5–6.	O.					
1	1447″·618	1254″·077	1584″·498	1610″·609	766″·229	6586″·198	10	6586″·082	+0″·116	+0″·0034	1936
2	1384·799	1030·547	2670·526	901·098	…	5935·553	15	5935·560	− ·007	− ·0003	1767
3	360·837	886·867	1145·359	1765·262	500·670	4614·332	4	4614·276	+ ·056	+ ·0004	163
4	3383·440	3485·804	…	…	…	6834·814	5	6834·617	+ ·197	+ ·0085	364
5	2911·620	4006·036	…	…	…	6916·264	2	6916·376	− ·112	− ·0085	116
6	5163·120	743·318	…	…	…	5900·764	2	5900·861	− ·097	− ·0127	39
7	419·669	6037·913	…	…	…	6457·731	2	6457·546	+ ·185	+ ·0365	17
8	5859·131	766·218	…	…	…	6586·122	6	6586·136	− ·014	− ·0016	144
9	789·678	5893·341	…	…	…	6674·464	10	6674·700	− ·236	+ ·0258	281
10	5047·601	901·130	…	…	…	5935·855	8	5935·854	+ ·001	+ ·0001	215
11	552·652	5566·434	…	…	…	6116·463	3	6116·328	+ ·135	+ ·0220	131
12	585·861	5941·469	…	…	…	6524·986	7	6525·084	− ·098	− ·0143	110

The above table gives the results of Mr Cookson's observations, under the general heading Observed Distances; the column O gives the observed distance of the extreme stars of the arc; the other columns give the separately observed component distances of the same arc. The next column contains the number of times that the complete zone was observed, and it is to be understood that each zone was completely observed in a single night—generally both forwards and backwards. The results quoted are the means of the observations, so that they are independent of correction-terms depending on s. It is not necessary here to print the measures of position angle, observed by Mr Whittingdale; they are quoted *loc. cit.*, p. 187. With these position angles the observations of the smaller distances were projected on the great circle passing through the terminal stars of each zone, and the sum of these projected distances, given under column C, should, apart from terms in s^2, be equal to the corresponding values of column O. The residuals under O – C provide the data for determining whether a term depending on the square of the distance exists.

* De Sitter's *Dissertation*, p. 64.

† *Cape Annals*, vol. xii. part 2, p. 174.

Digitized by Google

Taking 1000″ as the unit of s, we should have from the observations of Zone 1 (since the terms proportional to s are identical):

	$O = a + 43{\cdot}42z$		$= 6586''{\cdot}198$
	$C = a + 1{\cdot}45z + 1{\cdot}25z + 1{\cdot}58z + 1{\cdot}61z + 0{\cdot}77z$		$= 6586\ {\cdot}082$
Whence	$34{\cdot}08z$	$= O - C$	$= +0''{\cdot}116$
	and z		$= +0\ {\cdot}0034$

as given in the column headed z.

The weights given in the right-hand column are assigned proportional to the number of times the zone has been observed, and to the square of the resulting factor of z (as obtained above), and inversely proportional to the number of separate distances in the zone.

The resulting value is

$$z = +0''{\cdot}0038 \text{ } \textit{mean error} \pm 0''{\cdot}0024.$$

As this *mean error* is fully $\frac{2}{3}$ of the value of z, it seems not improbable that the true value of z is *zero*. If z has reality, it implies that a correction of $-0''{\cdot}0038\ s^2$ is applicable to the heliometer readings after they have been converted into arc on some approximate and uniform scale value.* This correction depending on s^2 for a distance of 7000″ would be $= -0''{\cdot}18 \pm 0''{\cdot}12$. If the equivalent of that correction is not applied when the scale value is determined from measures of the standard stars, it is obvious that the observed distance between the standard stars (expressed in terms of the heliometer scales) will be too great, and consequently the derived scale value will be too small. The resulting Mass of Jupiter will therefore be too small by $3 \cdot \frac{0{\cdot}18}{7000} = \frac{1}{12763}$M—that is to say, the reciprocal of the mass will be too great by $+0{\cdot}082$. Otherwise the terms depending on z will have little sensible influence on the result. The Mass of Jupiter is chiefly dependent on the larger measured distances—say from 500″ to 1000″ (they never quite reach the latter figure). For such distances (apart from the effect on the scale value as above described) the effect of the term z on the distances is practically insignificant, viz., for $500'' = -0''{\cdot}001$ and for $1000'' = -0''{\cdot}004$.

With regard to Gill and Finlay's observations, no special steps were taken to detect errors of this type, because the *Victoria* triangulation affords an independent test, of a very crucial kind, for distances which range from 600″ to 7000″.

In the *Cape Annals*, vol. vi. part 1, p. 231, the following table is given, in which the observed distances are compared with the co-ordinates of the stars derived from the meridian observations at twenty-three observatories combined with the heliometer triangulation. The results are:—

Distances.	Gill.		Finlay.	
	C – O.	Weight.	C – O.	Weight.
0″ to 1500″	0″·000	20·1	+0″·011	21·5
1500 to 2500	– ·006	58·5	– ·023	36·6
2500 to 3500	+ ·003	62·7	– ·034	39·8
3500 to 4500	+ ·012	68·5	+ ·040	48·2
4500 to 5500	– ·046	52·8	+ ·024	34·5
5500 to 6500	– ·016	51·6	– ·039	31·8
6500 to 7200	+ ·029	25·9	– ·008	17·5

(The weights correspond to a mean error $= \pm 0''{\cdot}20$ for weight unity.)

There is not the remotest trace of systematic error, depending on the distance, in these results. For the smaller distances the residual errors from the observations of Jupiter's Satellites, already quoted (p. lxxxix), afford ample proof of like freedom from systematic error for distances from 3″ to 950″.

The origin of the systematic errors of the observers in the circumpolar triangulation remains a mystery, as yet unsolved; but within the limits above described there is ample proof that the heliometer observations by Gill and Finlay are affected by no such errors, and there seems to be no certain proof that, in the case of Cookson's observations, any such errors exist.

We have dealt at considerable length with the history of this part of the work, because, as will subsequently be evident, it is desirable to state fully the grounds on which the proofs of its freedom from systematic error rest.

A full account of Cookson's observations, and of their reduction and discussion by him, is published in vol. xii.

* It is here assumed, of course, that the correction depending on κ has been first applied, as was done by Cookson.

Digitized by Google

part 2 of the *Cape Annals*, under the title *Determination of the Mass of Jupiter and Orbits of the Satellites, from Observations made with the Cape Heliometer*, by Bryan Cookson, M.A. (1906).

Simultaneously with Cookson's heliometer observations of 1902 a series of thirty-five photographic plates of Jupiter and his Satellites was made during the opposition of that year. The photographs were taken by Mr Woodgate with the astrographic telescope, and measured by Mr Cookson and Mr Löwinger at the Cape. At Cambridge, in July 1904, Mr Cookson applied as a candidate for one of the Mackinnon Studentships of the Royal Society, and, by the award which was made in that year and renewed in the following year, Mr Cookson was enabled to secure the assistance of computers in the reduction of the observations.

In taking the plates, the aperture of the astrographic telescope was reduced by a circular diaphragm to six inches. Preliminary experiment showed that this aperture gave a measurable trail of the Satellites and also good images of them. First of all, the telescope was set so that the centre of the plate coincided nearly with the middle point between the standard stars 21 and 23 Capricorni,* and three separate exposures of ten seconds each were made, the telescope being moved slightly in declination between each exposure. The telescope was then directed so that the centre of Jupiter came, as nearly as possible, on the y axis of the plate at a distance of 10′ from the centre of the plate, and three exposures of five seconds each were made, the telescope being moved in declination about 3′ between each exposure. After these three exposures the telescope was unclamped and moved just sufficiently to allow Jupiter to trail centrally from one side of the plate to the other, and was left at rest until this had been effected. The telescope was next reclamped to the driving arc, and three more exposures on Jupiter, similar to the first three, were made; but, in order to distinguish them from the first set, the images were unequally spaced in declination. Thus the observations were made in the following order:—

3 exposures, of 10 seconds each, on the standard stars.
3 exposures, of 5 seconds each, on Jupiter.
Trail of Jupiter.
3 exposures, of 5 seconds each, on Jupiter.

The arrangement of the plate is roughly represented in the subjoined figure.

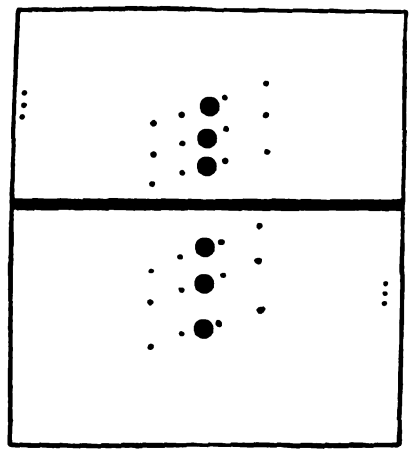

The plates were measured with one of the Gill-Repsold machines (described *Monthly Notices*, vol. lix. p. 61); and every image was bisected once in each of two positions of the plate, by each of two observers. Since there were, in general, six images of each Satellite, this implies twenty-four measures for each plate.

The image of a *réseau* was printed with parallel light on all the plates. No errors in the straightness of the lines involved, nor in their spacing, were detected, and therefore no corrections for *réseau* errors have been applied. The co-ordinates of the Satellites were referred to these *réseau* lines. The full discussion of these observations was published (*Cape Annals*, vol. xii. part 4) under the title *Determination of the Elements of the Orbits of Jupiter's Satellites, from Photographs taken at the Cape in* 1902, by Bryan Cookson, M.A. (1907).

Simultaneously with the heliometer observations of 1891, a series of forty-three photographic plates of Jupiter and his Satellites was taken, with five or six exposures of each plate. For the determination of the scale value and orientation of the plate, a pair of standard stars was photographed on each plate in such position that the middle point between the two stars is approximately the centre of the plate. De Sitter, in his discussion of the heliometer observations of 1891, had expressed the view that the future discussion of the positions and motions of the orbital planes of Jupiter's Satellites could be most advantageously based on heliometric or photographic observations; he suggested the mean epoch 1903·7 for a new series of observations, as one not too remote to allow the determina-

* This pair was also employed as the standard stars in the heliometer observations of 1901.

Digitized by Google

tion of new values of these elements before the expiration of the tables which are at present in use, and still promising a fair accuracy in the determination of the motions of the nodes.

Accordingly, a series of thirty-one photographic plates was taken at the opposition of 1903, and another series of thirty-two plates at the opposition of 1904, all with the Cape astrographic telescope.

The plates of 1891 were made without trails; those of 1903 and 1904 were made precisely on the same plan as the plates of 1901 already described. The standard stars for 1891 were the same as those used in the heliometer work of that year, viz., the stars S.D. $-8°{\cdot}5905$ and $-7°{\cdot}5838$ (see p. lxxxvi).

Those used in 1903 were:

24 Piscium (6·0) and 27 Piscium (5·2),

and those used in 1904:

B.D. $+7°-240$ (6·9) and B.D. $+8°-258$ (6·7).

All these plates were sent to De Sitter and were measured and discussed by him. His object in this work was, as already mentioned, to determine these quantities which alone, or nearly alone, determine the positions of the orbital planes.

For this purpose, instead of measuring the usual x and y co-ordinates (R.A. and Dec.), he selected a system of co-ordinates of which the axis of y is the projection on the plate of Jupiter's adopted axis of rotation, and the axis of x is perpendicular to this. Of these the y co-ordinates of the Satellites were alone measured. The *réseau* printed on the plate was therefore not used. Instead, by means of the known position angle of the standard stars, and with the aid of the position circle of the Repsold measuring machine of the Astronomical Laboratory at Groningen, the plate was adjusted approximately at right angles to the computed position angle of the axis of y, and the co-ordinates of y were measured directly with the micrometer screw of the microscope. The whole of the measured quantity thus never exceeds a few revolutions of the micrometer screw; and, since it is so small, the value of a revolution of the micrometer screw in arc does not require to be determined with the highest accuracy.*

But it is in the highest degree necessary that, as the plate is moved along the axis x, the optical axis of the microscope where it intersects the surface of the plate should describe a straight line, because any departure from that condition enters directly into the determination of the y co-ordinates.

The plate-holder rests on a guiding cylinder with two V's, and is pressed against it simply by its own weight; its third point of support slides on a plane parallel to the axis of the cylinder. To determine the errors of the slide-motion of the plate, a long spider line was stretched on a brass frame which could be mounted parallel to the x axis in the plate-holder in the same way as the plate. The y co-ordinates of this spider line at each alternate millimeter of the x axis scale was repeatedly measured, and thus, on the assumption that the stretched spider thread is a true straight line, the errors of the slide were readily determined. "With the exception of the extreme ends, which are seldom or never used, the errors so found were smaller than 0·2 micron, or $0''{\cdot}012$ in arc upon the plate." The measures were made as follows:—

(1) The plate having been approximately adjusted in the position angle of the standard stars, the distances of the images of these stars from a line parallel to the axis of the cylinder slide were measured by the micrometer screw.

(2) The microscopes of the position circle were read.

(3) The plate was then brought to the computed position angle of x and the position circle read as in (2).

(4) The images of the Satellites were then successively bisected with the micrometer-microscope, first in the order of increasing x, and then in the reverse order (*i.e.* with opposite motion of the plate slide).

(5) The plate was then rotated 180°, and the above operations were repeated in the reverse order.

In the plates of 1903 and 1904 the trails were measured, in two positions of the plate differing 180°, before the first and after the last measure of the standard stars. Pointings were made on eleven points on the trail, viz., that point which has the same R.A. as Jupiter in the other exposures, and five points on each side of it at the distances $\pm 10'$, $\pm 20'$, . . . $\pm 50'$, and the necessary corrections to reduce it to a straight line were computed; so that, after these corrections, the extremities of the co-ordinates will lie in a straight line, which is a tangent to the trail at its middle point. The details of the discussion of these observations are published (*Cape Annals*, vol. xii. part 3) under the title *A Determination of the Inclinations and Nodes of the Orbits of Jupiter's Satellites*, by Dr W. de Sitter, from photographic plates taken at the Royal Observatory, Cape of Good Hope (1906).

* 10 revolutions of the micrometer screw correspond to 1 mm. on the plate.
1 revolution $= 5''{\cdot}94$.

Digitized by Google

De Sitter published his further investigations on the libration of the three inner Satellites of Jupiter in 1907, based upon:

(1) Gill and Finlay's heliometer observations at the Cape in 1891, reduced by himself (*Inaugural Dissertation*), but to be published, after revision, in the *Cape Annals*, vol. xii. part 1.

(2) Photographic plates in 1891 to 1898 taken at Helsingfors by Donner and at Pulkowa by Kostinsky, and all measured by Renz (*Mem. Imp. Acad. Sci. St Petersburg*, 7th series, vol. vii. No. 4, and vol xiii. No. 1).

(3) Cookson's heliometer observations at the Cape in 1901 and 1902 as reduced by himself and published *Cape Annals*, vol. xii. part 2.

(4) Photographic plates taken at the Cape in 1904, measured by De Sitter, and published *Groningen Publications*, 17, chap. iii.

Renz measured the differences of R.A. and Decl. of the Satellites on the Helsingfors and Pulkowa plates, and publishes the co-ordinates $\Delta\alpha \cos\delta$ and $\Delta\delta$ referred to the centre of the planet, corrected for refraction, orientation, and scale value.

The Cape plates of 1904 were primarily taken for determination of the Inclinations and Nodes, and for this purpose (see p. xciii) the co-ordinates y (*i.e.* the latitudes) only were originally measured. When De Sitter began the investigation of the libration, it appeared desirable to have a determination of the mean longitudes for one or both of the oppositions 1903 and 1904. But, from a preliminary discussion, it appeared that the epoch 1904 was the more advantageously situated for a decision whether the libration-period was 7·2 or 4·44 years—a point which appeared equally possible from the observations of 1891, 1901, and 1902. Further observations were therefore confined to the series of 1904.

The y co-ordinates of these plates had been already measured. These co-ordinates from their smallness could be measured with the micrometer alone; but to measure the x co-ordinates it is necessary to combine scale with micrometer readings, and De Sitter found that this would occupy more time than he could spare, if different scale readings as well as different micrometer readings had to be made for each of the six different exposures of each Satellite. But, as the six images of each Satellite are arranged on the plate nearly upon a circle of declination, much time could be saved by measuring differences in R.A., because these measures could all be made for the same Satellite with the micrometer-microscope, and reference to the scale need only be made for one of the exposures of each Satellite. De Sitter remarks that "the loss in factor of the correction to the mean longitude, which is a consequence of the projection of the co-ordinate x on the parallel circle, is amply balanced by the gain in rapidity and accuracy of the measures." The *réseau* printed on the plate was not used.

The measures thus made are published in the *Groningen Publications*, 17, pp. 63–66.

The results of the Cape heliometer observations of 1891, 1901, and 1902, and the above-mentioned photographic observations at the Cape, Pulkowa, and Helsingfors in the years 1891 to 1904 were combined by De Sitter in his paper "On the Libration of the three inner large Satellites of Jupiter" by W. de Sitter (*Publications of the Groningen Astronomical Laboratory*, No. 17, 1907).

De Sitter (*Proceedings Royal Acad. of Sciences*, Amsterdam, for 28th March 1908), in the paper entitled "On the Masses and Elements of Jupiter's Satellites, and the Mass of the System," combines the above-mentioned researches and derives the most probable results from them.

With regard to the Mass of Jupiter, which was originally a primary object of the heliometer observations, the separate results were as follows:—

Reciprocal of the Mass of Jupiter.

		Probable Error.
De Sitter's discussion of Gill and Finlay's heliometer observations . . .	1891	1047·50±0·06*
Cookson's discussion of his own observations	1901	·44±0·09†
,, ,, ,, ...	1902	·25±0·06†

* The result originally published in De Sitter's *Dissertation* was 1047·226 (*loc. cit.*, p. 72). The corrected figure 1047·50±0·06 given above arises from the following errors subsequently discovered by De Sitter:—

(*a*) The detection of previously undiscovered mistakes by Marth in the constant part of the radius vector (see *The Observatory*, Dec. 19, p. 450).

(*b*) Owing to motions of the system during the aberration times (see De Sitter, *Monthly Notices, R.A.S.*, vol. lxxii. pp. 602–3).

(*c*) Some minor mistakes in the revised computations which are not yet published.

The probable error of this result, given above, includes the accurately known probable error of the distance of the standard stars (the standards of the *Victoria* triangulation).

† These probable errors do not include the effects of the errors of the places of the standard stars, which may amount to 0″·2 or 0″·3, at least, in both co-ordinates.

Digitized by Google

Newcomb (*Fundamental Constants of Astronomy*, p. 97) derives his adopted reciprocal of the Mass of Jupiter as follows :—

		Adopted Weight.
From all observations of the Satellites	1047·82*	1
Action on Faye's Comet (Möller)	·79	1
Action on Themis (Krueger)	·54	5
Action on Saturn (Hill)	·38	7
Action on Polyhymnia (Newcomb)	·34	20
Action on Winnecke's Comet (v. Haerdtl)	·17	10
Mean	1047·35	
Probable error	±·044†	

It is not easy to understand why Newcomb has assigned such considerable weight to Haerdtl's results from Winnecke's Comet, for he expresses his distrust as to "whether observations on a comet can be considered as having been always made on the centre of gravity of a well-defined mass, moving as if that centre were a material point subject to the gravitation of the Sun and planets." De Sitter adds: "It is very uncertain, if not improbable, that the observed centre of light should retain the same relative position with respect to the centre of gravity through one apparition of a comet, and *a fortiori* in different apparitions."

On these grounds De Sitter proposes the rejection of all results for the Mass of Jupiter which depend on observations of comets, and he based his value of the reciprocal of the Mass of Jupiter on the following results :—

Reciprocal of the Mass of Jupiter.		Probable Error.	Adopted Weight.
Krueger, from perturbations of *Themis* . .	1047·54	±0·19	5
Hill, ,, ,, *Saturn* . .	·38	± ·12	7
Newcomb, ,, ,, *Polyhymnia* . .	·34	± ·06	20
From the heliometer observations of 1891 . .	·50	± ·06	10
,, ,, ,, 1901 . .	·46	± ·09	4
,, ,, ,, 1902 . .	·25	± ·06	6
Mean . . .	1047·394	±0·026	

The probable errors are those quoted by Newcomb, or by the authors of the discussions; the combining weights are based on judgment.

The simple mean is 1047·412; the mean from the perturbations of planets alone is 1047·380; and the mean from the heliometer observations of the Satellites alone 1047·417. De Sitter thus adopted, with good reason,

1047·40±0·03.

The next immediate object arrived at, after the determination of the Mass, was that of the Inclinations and Nodes. The following table gives the resulting values of the corrections to Souillart as at the different epochs by the heliometric and photographic observations. The right-hand column for each Satellite gives the residuals from De Sitter's corrections to Souillart's theory.

* This result does not include the observations described in the present work, but refers to earlier heliometer and other observations of the Satellites. See also *Astronomical Papers of the American Ephemeris*, vol. v. part 5.

† This is the *probable error*. Newcomb gives the mean error ±0″·065.

Digitized by Google

TABLE I.—Inclinations and Nodes, Epoch 1900·0.

Series.	Observed Correction.	Probable Error.	Residual.	Observed Correction.	Probable Error.	Residual.	Observed Correction.	Probable Error.	Residual.	Observed Correction.	Probable Error.	Residual.
	p_1.			p_2.			p_3.			p_4.		
1891 H	+0°·0360	± ·0045	+ ·0023	+0°·0752	± ·0031	+ ·0025	−0°·0029	± ·0020	+ ·0032	+0°·0630	± ·0010	+ ·0022
„ P	+ ·0372	± 50	+ 35	+ ·0733	± 36	+ 6	− ·0024	± 19	+ 37	+ ·0639	± 12	+ 30
1901 H	+ ·0338	± 71	+ 20	+ ·1119	± 52	− 64	− ·0105	± 33	+ 18	+ ·0564	± 17	− 54
1902 H	+ ·0091	± 65	+ 1	+ ·0923	± 40	+ 19	− ·0097	± 25	+ 18	+ ·0636	± 13	+ 16
„ P	+ ·0026	± 80	− 64	+ ·0941	± 42	+ 37	− ·0095	± 27	+ 21	+ ·0612	± 14	− 8
1903 P	+ ·0021	± 60	+ 75	+ ·0526	± 33	− 33	− ·0199	± 22	− 97	+ ·0583	± 12	− 30
1904 P	− ·0028	± 78	− 58	+ ·0158	± 44	+ 8	− ·0104	± 28	− 11	+ ·0648	± 13	+ 27
	q_1.			q_2.			q_3.			q_4.		
1891 H	−0°·0273	± ·0049	− ·0063	+0°·0867	± ·0029	+ ·0015	−0°·0681	± ·0017	+ ·0016	−0°·0137	± ·0010	− ·0005
„ P	− ·0258	± 61	− 48	+ ·0813	± 35	− 39	− ·0748	± 23	− 51	− ·0117	± 11	+ 15
1901 H	− ·0793	± 79	− 57	− ·1658	± 45	+ 76	− ·0369	± 30	+ 103	− ·0191	± 16	0
1902 H	− ·0769	± 59	− 37	− ·1896	± 36	+ 41	− ·0430	± 21	− 4	− ·0172	± 13	+ 22
„ P	− ·0820	± 62	− 88	− ·1904	± 37	+ 33	− ·0384	± 22	+ 43	− ·0170	± 13	+ 24
1903 P	− ·0597	± 48	− 58	− ·2120	± 32	− 29	− ·0442	± 20	− 4	− ·0209	± 11	− 6
1904 P	− ·0336	± 77	− 34	− ·2253	± 48	− 90	− ·0177	± 26	− 54	− ·0210	± 17	0

H denotes heliometer observations. P denotes photographic observations.

Here $p = i \sin(-\Omega)$, $q = i \cos(-\Omega)$. The suffixes 1, 2, 3, 4 indicate Satellites I., II., III., IV., where i is the inclination of the Satellite and Ω is the ascending node.

The probable error for weight *unity*, determined from these residuals, is

$$\rho = \pm 0°·0097.$$

The originally assigned weights corresponded to a probable error for weight *unity* of

$$\rho = \pm 0°·0100.$$

Comparing each residual with its probable error, we find the following :—

	Number of Residuals.	
	Actual.	Theoretical.
Smaller than ρ	30·5	28·0
Between ρ and 2ρ	16·5	18·1
Between 2ρ and 3ρ	6	7·5
Exceeding 3ρ	3	2·4

Considering that these corrections, Δp and Δq, are, for each epoch, the result of a separately made and separately reduced series of observations made by different observers with different instruments, the above agreement between the actual and computed errors, and between the actual and theoretical distribution of these errors, is very remarkable, and would indicate a general freedom of the observations from systematic error.

Exception may perhaps be taken to this conclusion on account of the persistent negative sign of the residuals in the case of q_1. This might be due in some degree to chance or to one or two other causes—viz., non-coincidence of the centre of gravity with the centre of light of the first Satellite, or outstanding errors in the theory. The first Satellite has sometimes been seen double or elongated, but it does not seem possible to derive anything definite from these occasional observations. As to the assumption of markings of unequal brilliancy on the surface of the Satellite, De Sitter writes (*Proc. Amsterdam Acad.*, 1907 June, p. 105): "Any attempt to explain the observed discrepancies on this hypothesis would, however, involve so many indeterminate quantities that its success would be no proof of its representing a true fact of Nature." It is also possible to account for a considerable part of the discordance by errors in the theory or its constants. In the table above quoted the motion of the node was reduced to a common epoch by Souillart's theory from De Sitter's preliminarily adopted masses of the Satellites (*Amsterdam Acad. Proc.*, 1908, March 28, p. 666). De Sitter informs the writer that with new masses (derived, by estimate, as a mean from Sampson's and De Sitter's present values) about one-third of the apparent systematic discordance can be explained.

Digitized by Google

It would occupy far more space than is at disposal to further follow the derivation of the constants of the theory of Jupiter's Satellites from the observations in question. It is sufficient to show that both the heliometer and photographic observations are in systematic accord, and yield important corrections to Souillart's theory.

Attention has already been called (p. lxxxv) to the unsatisfactory way in which the latitudes of the Satellites can be determined from the observations of eclipses only, and one cannot but regret that the data now at disposal were not utilised by Professor Sampson in the formation of his new tables of Jupiter's Satellites, which, so far as modern observations are concerned, are based exclusively on the photometric observations of eclipses made at Harvard College Observatory.

From the following comparison between the values of the inclinations and nodes * (derived, on the one hand, by Sampson from the photometric observations of eclipses made at Harvard College Observatory, and, on the other hand, by De Sitter from the above-mentioned observations) it will be seen that the discordances are considerably greater than the probable errors of any single series of heliometer or photographic observations.

Inclinations and Nodes. Epoch 1900, Jan. $0^d{\cdot}0$ G.M.T.

		°	°		°	°
I.	De Sitter	0·0272±0·0028	and	60·2	±7·0	−0·13614 t
	Sampson	0·0327	,,	33·3		−0·13403
II.	De Sitter	0·4683±0·0016	,,	293·16	±0·19	−0·032335 t
	Sampson	0·4644	,,	290·55		−0·032699
III.	De Sitter	0·1839±0·0026	,,	319·71	±0·52	−0·006854 t
	Sampson	0·1970	,,	320·70		−0·006978
IV.	De Sitter	0·2536±0·0023	,,	11·96	±0·67	−0·001772 t
	Sampson	0·2635	,,	7·33		−0·001755

The complete photometric observation of an eclipse furnishes a more exact determination of a Satellite's *longitude* than a single heliometer observation, and about the same accuracy as a good photographic plate containing six exposures.† But the opportunities for the complete observation of eclipses, especially in the case of the fourth Satellite, are rare, whilst heliometric and photographic observations can be made at any time that Jupiter is visible at a suitable altitude. Up to the present time none of the great modern telescopes of long focus have been employed in making photographic observations of Jupiter's Satellites; and the recently published stellar parallaxes determined at Cambridge (England) and Yerkes prove that with such telescopes the relative position of two stars (and therefore that two Satellites) can be determined with an accuracy considerably greater than that derivable from a photometrically observed eclipse.‡ It is obvious, therefore, that, for the future improvement of the tables of Jupiter's Satellites, photographic observations made with the best telescopes of long focus should be employed.

In order that astronomers may be in a position to supply the requisite observations, the writer has consulted with De Sitter on the subject, and has discussed with him the programme of future observation which would supply the data that are still necessary for a definitive determination of the constants for a new theory of Jupiter's Satellites.

* Innes—*The Observatory*, Dec. 1910, p. 482.

† The probable errors of one observation with resulting Jovicentric errors are :—

	I.	II.	III.	IV.	*Authority.*
	s °	s °	s °	s °	
Delambre	15 = 0·035	35 = 0·041	90 = 0·052	120 = 0·030	De Sitter.
Modern eclipses	15 = 0·035	15 = 0·018	20 = 0·012	40 = 0·010	do.
Sampson	7·2 = 0·017	11·3 = 0·014	11·6 = 0·007	22·2 = 0·006	*Harvard Annals*, lii. pp. 295, 309.
Heliometer (0″·087)	0·034	0·022	0·013	0·008	*Cape Annals*, xii., 3, p. 90.
Photographic (0″·050)	0·020	0·012	0·008	0·005	do.

‡ From these determinations of stellar parallax, recently published by Professor Henry N. Russel [from photographic observations made at Cambridge (England) by himself and Mr Hinks] and by Professor Schlesinger [from photographs with the Yerkes telescope], it appears that the average probable error of the position of a parallax star derived from the measures of a single plate is as follows :—

Cambridge telescope (19·3 feet focus)	±0″·048 (4 exposures)
Yerkes telescope (63 feet focus)	±0″·026 (3 exposures)
A complete heliometer observation for stellar parallax (Gill)	±0″·036 (16 pointings)

Digitized by Google

The outcome of correspondence on the subject may be stated as follows:—

The principal non-secular terms in the longitudes of the Satellites are:

Ia. The Equations of the Centre.
Ib. The great Inequalities.
II. The Inequalities having periods between 400 and 500 days.
III. The libration.

(It is curious that the terms II are called by Tisserand "les grandes inégalités," whilst those under Ib are only called "inégalités périodiques.")

In eclipse observations the period of Ib is 438 days; it is therefore badly separated from II (see De Sitter, *Elements and Masses*, p. 711). In the case of heliometer and photographic observations, Ia and Ib have nearly the same period (see De Sitter, *Dissertation*, pp. 68–70),* and are thus also difficult of independent determination.

Accurate observations of transits of the Satellites and their shadows, such as those made by Innes at Johannesburg, where both inferior and superior conjunctions are combined, afford means of separating the terms Ib and II completely; in fact, Ib can be determined from a comparison of the eclipses and occultations with the transits of the Satellites and their shadows of the same year. To separate Ia from Ib a series extending over at least six years is required. Such observations alone, however, will not be sufficient to determine the libration. But if the inequalities II and the libration are known, Innes' observations, if continued, will give a good determination of the equations of the centre and especially of the great inequalities: at present the latter are very uncertain. The equations of the centre of the third and fourth Satellites are now fairly well determined, but those of the first and second Satellites are still practically unknown.

So far as can be foreseen, the only prospect of obtaining accurate data for a definitive determination of the libration lies in having a number of series of accurate photographic or heliometer measures. Each of these series must be of sufficient extent not only to give the required accuracy, but, by equal distribution of the observations over the orbits of the Satellites, to eliminate in a great degree the effects of the unknowns, Ia and Ib. If these observations are taken at the epochs of the opposition of Jupiter—*i.e.* about 400 days apart—then the inequalities II (whose real periods are 463, 482, and 486 days) will present themselves as inequalities with apparent periods of 8·1, 6·4, and 6·2 years respectively. It will thus be very difficult to separate them from the libration, of which the most probable period is 7 years. This could only be avoided by taking the observations *not* at opposition, but near the stationary points of Jupiter. These latter occur about 2 months before and after opposition, so that nearly one-fourth of the period of the inequalities II would occur between the two epochs in question,—that is to say, a difference of phase of nearly 90°.

When the declination of Jupiter and the latitude of the observatory have the same sign it will generally be possible to obtain good photographs between 80 and 50 days before opposition, and between 50 and 80 days after opposition.

It is desirable that the observations in question should extend over at least one period of the libration (to be quite safe, over 8 years)—that is to say, there should be *at least* 16 *series* of observations, at mean epochs about 60 or 65 days before and after each successive opposition of Jupiter; but these observations will have to be made at southern observatories until Jupiter has northern declination.

The following table gives a list of the oppositions of Jupiter up to the year 1925. The values of P (the position angle of Jupiter's axis) are given for each of the epochs.

Oppositions of Jupiter.

Date.	α. h	δ. °	P. °	
1912 May 31	16·6	−21	8	
1913 July 5	18·9	−23	353	
1914 Aug. 10	22·3	−17	340	
1915 Sept. 14	23·4	− 4	336	
1916 Oct. 18	1·5	+ 9	338	
1917 Nov. 24	5·8	+20	347	
1918 Dec. 27	6·3	+23	1	Epoch for determining the inclination and nodes.
1920 Jan. 31	8·9	+18	16	
1921 Mar. 6	11·1	+ 6	23	
1922 Apr. 10	13·2	− 8	22	
1923 May 15	15·4	−19	15	
1924 June 18	17·7	−23	1	
1925 July 23	20·1	−20	348	

* There is a mistake in the formulæ which does not affect the argument. For the correct formulæ see *Cape Annals*, xii., part 4, p. 101, or *Groningen Publications*, 17, p. 48.

Digitized by Google

A careful estimate shows that to secure the desired accuracy, at least fifteen plates will be required (with four to six exposures on each plate) at each of sixteen successive libration series; there being two series in each year, beginning, let us say, 1914 (May 20–June 20) and (Oct. 1–Oct. 31); and these plates must be taken with telescopes of long focus which give images capable of measurement with like precision to those afforded by the stellar parallax plates at Cambridge and Yerkes.* There is no need for elaborate determinations of standard stars for scale value, as that constant will be far better determined from the now well-known Mass of Jupiter. But a pair of standard stars should be photographed nearly symmetrically with the centre of each plate. These standard stars should differ but little in declination; their difference in R.A. should be approximately known (say to $\pm 0^s{\cdot}05$), and their difference in declination can be determined with an ordinary equatorial and filar micrometer measures with any required precision. There is, however, no necessity for extreme precision in the determination of the position angle of the standard stars; because, *except for two of the libration periods after mentioned*, the position angle need only be known with sufficient accuracy to permit accurate determinations of the differences of the longitudes of the Satellites from measures of the x co-ordinate (*i.e.* along a line at right angles to the position angle of Jupiter's axis of rotation).

To facilitate these measures it is very desirable that the successive images of Jupiter should be arranged on the plate, not, as usual, in the same circle of declination, but in a line parallel to the axis of Jupiter (*i.e.* in position angle P). With successive images so arranged there would be no need to read the *scale* of the measuring machine except for one of the exposures; the other measures could be made with the micrometer alone (see also p. xciv). This arrangement can be effected either by placing a wire, fixed in the position angle P, in the focus of the guiding telescope, or by computing before-hand the scale readings of the setting micrometer of the guiding telescope to give the required arrangement of the successive exposures. There should be *no réseau*-image on the plates, and no trails are necessary.

De Sitter (*Cape Annals*, xii., part 3, page 121) has already pointed out the desirability of a further determination of the inclinations and nodes of the Satellites about the epoch 1920. The chief addition to the programme for this purpose is to provide *very accurate* means for determining the orientation of the plates at two of the libration epochs. It is desirable that this orientation should be certainly known within 2″ or 3″, and that, for control, it should be determined both by trails and standard stars. Evidently, also, it would be well if the determination by both methods could be freed from the effects of errors of graduated circles; and this result can be secured when the Satellites lie nearly along a parallel of declination, *i.e.* when P is nearly $= 0°$. Fortunately this is the case at the opposition of December 1918, which, for all practical purposes, is quite near enough to the epoch 1920.†

Trails made in the manner illustrated at p. xcii would not be available, because, when P is nearly $= 0°$, the image of the planet would obliterate the images of the trails of the Satellites, and the trail left by the planet itself is not measurable with sufficient precision. But if the trails are made of limited length and are exposed only towards the preceding and following sides of the plate, the difficulty in question would be overcome.

The semi-major axis of the fourth Satellite is about 10′; that of the third Satellite 6′. If we suppose these Satellites to be at elongation on opposite sides of the planet, the arrangement of the images of a trail and of the plate generally would be somewhat as follows :—

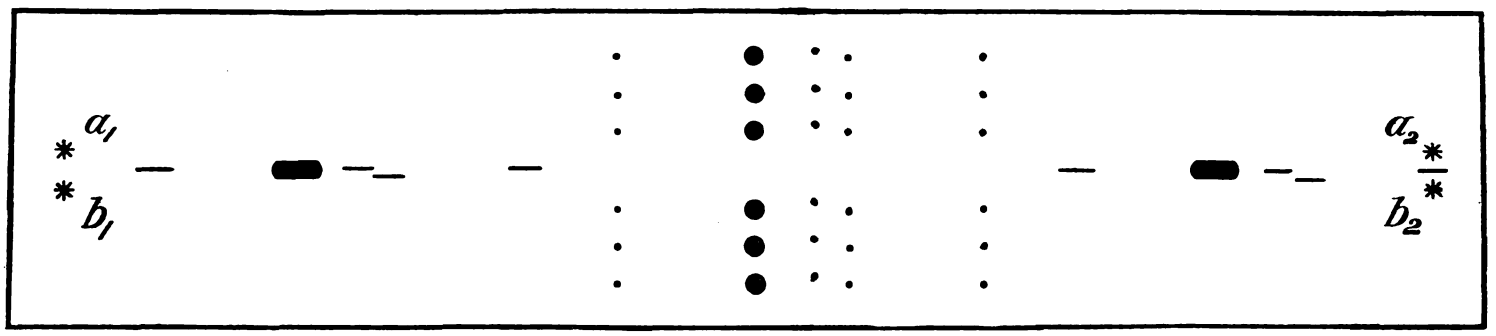

The two pairs of images of the standard stars a_1 a_2 and b_1 b_2 are shown above; the distance a_1 a_2 should be about 60′. It is not advisable to employ a much greater distance of the standards, because it seems probable that the optical distortion of the field may not be negligible beyond a radius of 30′. For a telescope of 35 feet focus this

* For the Southern Hemisphere there are at present no instruments of that class, except the Victoria telescope of the Cape Observatory (22·5 feet focus). But by 1915 the telescopes of 35 feet focus now under construction by Sir Howard Grubb for Johannesburg and Santiago should be available. In the Northern Hemisphere we may hope before 1916 to have the new 35 feet photographic refractor at Nikolaief, in addition to the other powerful existing instruments at Cambridge, Yerkes, and elsewhere.

† The epoch of reduction of the observations of the proposed series of observations 1914–1922 would therefore be most conveniently 1919·0, but there is no objection to any continuous series of eight years to determine the libration, although the epochs 1918 December and 1924 June are the oppositions most favourable for determining the inclinations and nodes.

Digitized by Google

will give a distance of 180 mm., and it would be well to employ plates of not less than 200 mm. in length in the direction of R.A., in order that the standard stars may not be located too near the edge of the plate. The centres of the trail-images of Jupiter should be about 40′ of arc apart. The difference of declination of the standard stars should be determined for the epoch of the satellite observations with a probable error not exceeding $\pm 0''{\cdot}03$: such a determination should present little difficulty; with a good equatorial and filar micrometer from 50 to 100 measures of $\Delta\delta$ should suffice, the telescope being at rest and the images bisected by the same micrometer web as they successively transit the centre of the field. Stars of about 8–9 magnitude should be selected. The trails might be exposed for about four to six seconds, and must be accurately timed. The greatest care should be exercised in handling the exposure shutter, so as not to disturb the telescope between the two exposures. It would greatly facilitate matters if slits were made in the cover of the dark slide at 20′ of arc from the centre of the plate, in the position angles 90° and 270°. When the preceding limb of Jupiter reaches the centre of either of these two slits the observer would be warned to make the necessary exposure for trail.

Thus, to secure all desirable accuracy for the libration epoch and the determination of the inclinations and nodes at the epoch of the opposition of 1918–19, the observations should be begun about 1918 November 1, and be continued till about 1919 March 1. On account of the high northern declination of Jupiter in 1918–19, these observations could only be made with advantage in the Northern Hemisphere. About 50 first-rate plates, well distributed over this period, should suffice. The total programme would therefore comprise:

15 plates taken at each of 14 libration epochs with approximately determined standard stars, but without trails	210 plates
50 special plates (with trails, and standard stars determined with the utmost precision in position angle) in 1918–19	40 ,,
Total . . .	250 plates

Professor De Sitter writes:—

"*If these plates were made and sent to Leiden, I could undertake to measure them myself, or to have them measured by competent observers, either belonging to the observatory staff, or students (who could do the work as a dissertation for the Doctor's degree); I would also undertake the ultimate discussion of the whole of the material.*"

It is estimated that from these observations the Jovicentric longitude of the second Satellite will be determined for each of the libration epochs with a probable error not exceeding $\pm 0°{\cdot}0025$.

There remains the determination of the mass of the fourth Satellite (m_4), which at present is very imperfectly known.

The equation of the centre and inclination of the third Satellite are given by equations of the form:

$$2E_3 \sin \Pi_3 = 0°{\cdot}1736 \sin \varpi_3 + 0°{\cdot}0706 \sin \varpi_4$$
$$i_3 \sin \Omega_3 = 0°{\cdot}1839 \sin \theta_3 + 0°{\cdot}0305 \sin \theta_4$$

and the same with the cosines.

The second coefficient is proportional in both cases to m_4.

Evidently the equation of the centre is the most favourable; but consider, in the first place, the inclinations. In 1900·0 we have $\theta_3 - \theta_4 = 208°$; in 1919·0 we shall have 174°. At both epochs we can suppose i_3 to be determined with a probable error of $\pm 0°{\cdot}0020$; the difference will thus have the probable error of $\pm 0°{\cdot}0030$. This difference will be about one-half of the coefficient of $\sin \theta_4$, which will thus be determined with an accuracy of 1/5th of its amount. This will also be the resulting accuracy of m_4.

The determination through E_3 from modern observations is still more uncertain, notwithstanding that the coefficient is double that in latitude, because the determination of the equation of the centre is subject to much greater error, and we cannot expect a probable error much smaller than $\pm 1/4m_4$ in this way. But here advantage can be taken of ancient eclipse observations, because they can determine longitudes, although useless for the determination of latitudes. De Sitter in his *Dissertation* has pointed out (p. 82) that a re-reduction of the observed eclipses of the third Satellite, made about the mean epoch 1790, will give the mass of the fourth Satellite with a probable error of $\pm \frac{1}{14} m_4$. This presupposes a probable error of $\pm 0{\cdot}010$ for the unknowns h_3 k_3 at the epoch 1790, and available observations of 50 immersions and 50 emersions.* Now between 1772 and 1799 De Sitter has found in the literature of the epoch records of 63 completely observed eclipses of the third Satellite (*i.e.* observations of

* See table in De Sitter's *Dissertation*, p. 75.

Digitized by Google

both immersion and emersion by the same observer with the same instrument), and of these several have been observed at two or three places. A probable error considerably less than $\pm 0^{\circ}\cdot 010$ may therefore be expected.

The additional proposed modern observations will increase the weight of the determination considerably, and De Sitter thinks it possible that, by this method, the probable error of m_4 may be reduced to 1/20th of m_4. He adds :—

"*The reduction of these observations towards the end of the eighteenth century has for a long time been among the things that I desire to do when opportunity offers. I think you can assume that sooner or later it will be done here in Leiden, either by myself or by one of my students.*"

In his *Dissertation*, De Sitter further refers to a new reduction of the eclipses of the fourth Satellite about the epoch 1750 to determine its secular motion, $\frac{d\varpi_4}{dt}$. This motion is already known, with a probable error of 1/94th of its amount (*Elements and Masses*, p. 672), and De Sitter is doubtful if a new reduction of the few observations of the kind which exist would repay the labour. It seems hardly probable, in his opinion, that the result for ϖ_4 would be more reliable than the values derived independently by Delambre and Damoiseau, which are in excellent agreement. Also, De Sitter (*loc. cit.*) found from the Cape observations of 1900, and Bessel's heliometer observations of 1836, combined with the Delambre-Damoiseau value of ϖ_4 :

$$\frac{d\varpi_4}{dt} = 0^{\circ}\cdot 001872 \pm 0^{\circ}\cdot 000020 ;$$

and Cookson, from the heliometer observations of 1836 (Bessel), and those of 1891 and 1901 and 1902 (Cape), obtained the confirmatory result :

$$\frac{d\varpi_4}{dt} = 0^{\circ}\cdot 001892 \pm 0^{\circ}\cdot 000024,$$

which latter is entirely independent of eclipse observations.

Assuming the probable error 1/94, above quoted, and that the value of Jb^2 is known, the mass of the third Satellite would be known, with a probable error of about 1/40th of its amount.

The probable error of Jb^2 (to be derived from the motion of the node of the second Satellite between the epoch of the recent modern observations (Table I., p. xcvi) and those now proposed at the epoch 1919) will be about 1/700th of its amount. This estimate may not be entirely trustworthy because of the influence of errors in the preliminarily adopted masses, especially in that of the third Satellite ; but a powerful and independent determination of the mass of that Satellite will be obtained from the period of the libration.

De Sitter, for the above-mentioned reasons, is of opinion that the value of Delambre and Damoiseau for the perijove of the fourth Satellite, (ϖ_4), may be accepted.

In the case of E_3 the case is different ; one cannot assume Delambre's distribution of the complete equation of the centre over the two terms to be valid for any particular epoch, as no one knows how it was derived. The *complete* equation of the centre of the third Satellite at a given epoch must therefore be derived from a fresh discussion of the observations.

Enough has been said to show that means exist for determining, with all necessary precision, the constants of a new theory of Jupiter's Satellites ; it is hoped that astronomers will combine to furnish the data which Professor De Sitter desires, in order that he may be enabled to complete the work which he has already so well begun.

THE GEODETIC SURVEY OF SOUTH AFRICA.

The Abbé de Lacaille arrived in Table Bay on the 19th of April 1751, and the history of Geodetic Survey in South Africa begins about eighteen months after that date.

Whilst Lacaille was engaged in his survey of the stars in the Southern Hemisphere—a work which formed the principal object of his expedition—he ascertained, by several excursions to the northwards of Cape Town, that it would be comparatively easy to measure an arc of meridian nearly $1\frac{1}{4}$ degrees in length. There existed, at the time, no measurement of an arc of meridian in the Southern Hemisphere, and it was thus a matter of great scientific interest to determine whether the form of the Earth in the Southern Hemisphere is similar to that in the Northern Hemisphere, and this question had a special interest for Lacaille in connection with the reduction of his observations for the parallax of the Moon—an investigation which formed part of the astronomical programme of his expedition.

Digitized by Google

His celestial survey having been completed, a reconnaissance was undertaken in the month of August 1752 for definitive selection of the points for his arc of meridian, and, on the 9th of September of the same year, Lacaille left Cape Town for Klipfontein, the northern point of his proposed survey. Astronomical observations were made for latitude on sixteen stars, each observed on six nights between 16th and 24th September, and these gave, when compared with meridian zenith distances of the same stars as observed in Cape Town, a difference of latitude $1^\circ\ 13'\ 7\frac{1}{3}''$.

Lacaille's arc was made up of two large triangles with the common side Kapocberg-Riebeck's Casteel, the northern point being Klipfontein and the southern point his latitude station in Cape Town.* The measured base-line was connected with the common side by two smaller triangles.

The length of a degree of latitude (34° S.), derived by Lacaille from his survey, was, for a long time, a subject of perplexity to all theoretical investigators of the figure of the Earth, as the resulting length was greater than it could be, if the form of the Earth in the Southern Hemisphere were the same as in the Northern, and Lacaille's well-earned reputation for accuracy ensured respect for his result.

The discrepancy remained unexplained for nearly a century, when Sir Thomas Maclear, then Her Majesty's astronomer at the Cape, undertook the verification and extension of Lacaille's arc. After much labour spent in the identification and accurate definition of Lacaille's points of observation, Maclear connected them with a chain of triangulation extending to both north and south of Lacaille's arc, and including his four principal points. The precise terminal points of Lacaille's base-line could not be identified; but a new base-line, nearly in the same site as Lacaille's, 8·1 miles in length, was measured and connected with the chain of triangles. The measurement of the base-line was begun on the 30th of October 1840, and, with continuous work, was completed on the 3rd of April 1841. The measurement of the angles of the triangulation was begun in October 1841, and the field-work and astronomical observations were completed in March 1848. A full account of Maclear's work, edited by Sir George Airy, was published in two volumes by order of the Lords Commissioners of the Admiralty in 1866. Maclear's arc has an astronomical amplitude of 4° 37′ in latitude, and proves, within moderately narrow limits, that the form of the Earth in the Southern Hemisphere is similar to that in the Northern Hemisphere.

The astronomical amplitude of Lacaille's arc also proved to be very nearly correct, but a large local disturbance of the direction of gravity at the northern station (amounting to more than 8″ of arc) accounted for the greater part of the apparent error of Lacaille's work.

Nothing in the way of further systematic accurate triangulation was done in South Africa till 1859, when a triangulation of the southern coast of Cape Colony and British Kaffraria was set on foot, the Colonial Government being urged thereto by the demands of the Admiralty for the accurate determination of points on the coast-line in connection with the hydrographic survey which they were about to undertake, in order to correct the then very inaccurate and defective state of the charts of the coast. It was evident also that such a survey would furnish means of better connecting the detached property surveys through that part of the Colony. The work was entrusted to Captain Bailey, R.E., aided by one sergeant and thirteen rank-and-file of the Royal Engineers, five of whom were selected from the Ordnance Survey of England. The cost of the work was borne by the Colony; it was begun in 1859 and concluded in 1862. The party embarked at Algoa Bay in the *Waldensian, en route* for England. The vessel struck upon the rocks of Struys Point and became a total wreck. On board were the instruments, drawings, original observation books, with full abstracts, and calculation books of every kind; they were all lost, and have never been recovered. Fortunately, copies of "abstracts of angles" had been supplied to the Admiralty Surveyor engaged on the Coast Survey; other abstracts of angles, with a diagram, to the Surveyor-General in Cape Town; and from these and sundry copies sent to the Government of British Kaffraria, and to private individuals, an account of the work was compiled by Captain Bailey, and printed in a report presented to the Cape Parliament in 1863.

Soon after Gill's appointment as Her Majesty's Astronomer at the Cape in 1879, he began to study the general question of the Geodetic Survey of South Africa. The traditions of his office appeared not only to justify but to demand that some portion of his time and attention should be devoted to this work. Sir Bartle Frere was then Governor of the Cape Colony and High Commissioner for South Africa. From his experience of Indian administration, His Excellency thoroughly realised the advantages and the necessity for accurate survey, and the true economy of basing all future surveys upon a principal triangulation of such accuracy that its results might be considered definitive for all future time, and he gave Gill's recommendations his strongest and most cordial support.

These recommendations embraced a plan for a gridiron system of chains of principal triangulation extending over the Cape Colony, the Orange Free State, Natal, and the Transvaal.

* These stations will be found marked on the accompanying map.

Digitized by Google

The political and financial situation in the Cape Colony at the time rendered it difficult for ministers to take action during the session of 1880. The despatches, correspondence and papers on the subject were, however, laid upon the table of the House of Assembly (printed in form of a blue-book) in 1880, and ministers agreed to deal with the question the following session. Soon afterwards Gill had the privilege of meeting Sir George Pomeroy Colley, when His Excellency passed through Cape Town on his way to resume the government of Natal. After discussion of the question, Sir George Colley (himself an accomplished surveyor) promised to advocate a survey of Natal as a part of the Geodetic Survey of South Africa. In October 1880 Gill visited Natal as the guest of Commodore Richards (now Admiral of the Fleet, Sir Frederick Richards, G.C.B.) on his flag-ship H.M.S. *Boadicea*, in order to make preliminary experiments connected with the telegraphic connection of the longitudes of Aden and the Cape of Good Hope, and to further discuss with Sir George Colley the steps which should be taken in connection with the proposed survey. The result was that Sir George Colley took immediate steps to forward the project by addressing a message to the Legislative Council proposing to place a sum of £2000 on the estimates for 1881 for the initial expenses of the proposed operations, "the expenditure to be contingent on the Cape Government undertaking to join in the proposed survey and bear its share of the general expenses connected with it." One of the last documents addressed by Sir George Colley to the Legislative Council was a message of thanks for their reply to the above proposal; this message was dated 21st December 1880. A few days afterwards Sir George Colley left his seat of government, never, alas! to return.

Nothing was done till Gill again visited Natal in August 1881, in connection with the Aden-Cape longitude operations then in progress. He took advantage of the opportunity to re-open the survey question, with the result that Colonel Mitchell (afterwards Sir Charles Mitchell, G.C.M.G.), who was then administering the Government of the Colony of Natal, decided to write to the Secretary of State asking that the War Office might be applied to for the services of a captain and subaltern of the Royal Engineers, with a party of non-commissioned officers and men, to begin the survey, and Gill was requested to prepare the specifications for the necessary instruments.

The request for officers and men was granted, but very considerable delay from various causes (one of which was that the officer selected to command the party was engaged to proceed to Australia to observe the Transit of Venus) took place before the work was fairly begun in June 1883.

Meanwhile, in January 1883, Gill succeeded in arranging an agreement between the Governments of the Cape Colony and Natal to undertake the principal triangulation of both colonies as a joint work.

A detachment of Royal Engineers, consisting of Captain Morris, R.E. (now Sir William Morris, C.B., K.C.M.G.), Lieutenant Laffan, R.E. (now Colonel Laffan, C.M.G.), and fourteen non-commissioned officers and men, finally reached Durban in June 1883, and work was at once commenced by selecting, laying out and measuring the base-line. The subsequent movements of the survey party are described in the report on the Geodetic Survey of South Africa, presented to the Cape Parliament in 1896.

After the measurement and verification of the Natal Base had been completed, severe pressure was applied by the Government of Natal to accelerate the work at the expense of accuracy. The difficulty thus created was fortunately soon satisfactorily arranged, and Sir Charles Mitchell was convinced that the pecuniary saving which he anticipated from an isolated operation of inferior accuracy would not be so great as he at first supposed, and would be quite insignificant compared with the advantages to be gained from the definitive results that could be secured by the more comprehensive scheme.

To reduce expenses the proposed number of astronomical stations was somewhat diminished, and the services of Lieutenant Laffan, with four men, were transferred to the secondary triangulation, but in other respects the standard of geodetic accuracy was maintained. Captain Morris voluntarily undertook the additional responsibility involved in the discipline of a field party in charge of one officer only, and the additional personal labour involved in throwing the whole of the astronomical observations as well as the triangulation on himself, and he continued a close and intimate correspondence with Gill on all points connected with the survey.

On the 1st of September 1885 the survey operations were transferred to the Cape Colony. Lieutenant Laffan returned to his duty with the detachment under Captain Morris, and the direction of the survey was officially placed in Gill's hands.

On two subsequent occasions the question of suspending the work of the survey was severely pressed, and it became necessary, for financial reasons, to reduce the staff, first to one officer and nine men, and finally to one officer and five men, whilst, at the same time, urgent requests were made to bring the operations to a close as quickly as possible.

The work had thus to be completed at high pressure with the lightest possible equipment, and under conditions far less favourable than those which are usual in the conduct of geodetic operations.

Digitized by Google

The experience which Colonel Morris acquired in the transport of delicate instruments over rough places, in the management of distant heliostat parties, in the care of oxen and horses, and the regulation of his supplies, naturally increased year by year; the rapid rate of progress finally reached was due to methods which he evolved, and recommended from time to time, and which were introduced as soon as opportunity offered.

The whole of the astronomical observations in the field (except those connected with the determination of the longitude of Durban), and the measurements of the angles of the whole triangulation (except those of thirty-five triangles measured in Griqualand East by Lieutenant Laffan, and some angles of the tie-chain north of Mossel Bay, measured by Mr Pillans) were made by Colonel Morris personally, and the greater part of the computations in his Report were made by himself, checked by duplicate computations of Mr Robinson or Mr Pillans. Those results which depend on computations of Colonel Morris or Mr Robinson alone have been checked by two independent methods. The astronomical determination of the longitude of Durban depends on the operations connecting the longitudes of Aden and the Cape, which were carried out by members of the observatory staff in 1881–82.

Mr Finlay, chief assistant at the Cape Observatory, devoted his leave of absence during December 1887 to a visit to Port Elizabeth in connection with a determination of the difference of longitude Port Elizabeth–Cape with exchanged observers.

The places of most of the stars employed in the astronomical determinations of latitude and azimuth are based upon special meridian operations made at the Cape Observatory, and Mr Finlay, Mr Maclear, and Mr Pett, of the observatory staff, co-operated in the longitude operations.

The completion of this work, the results of which are published in vol. i. of the *Geodetic Survey of South Africa* (Parliamentary Report, Cape Town, 1896), enabled Gill to carry out a complete re-reduction of Bailey's survey, as a complete chain of Bailey's best triangles was included in the work of the geodetic survey. Many errors in Bailey's published work were detected, and the whole was reduced to systematic agreement with the geodetic survey. The results form vol. ii. of the *Geodetic Survey*, which was published in 1901.

The details of both works will be dealt with later on. The next object was how to extend these operations in such a way as to best increase their geodetic value. In vol. i. of the *Geodetic Survey* just mentioned (p. 157), Gill wrote on this point as follows:—

"*Looking forward to the practical and possible progress of geodesy, the question may be asked, Should not the progress made in geodetic survey in South Africa be regarded as the first step in a chain of triangulation which, approximately traversing the 30th meridian of east longitude, shall extend continuously to the mouth of the Nile?*"

On the immense importance of the proposed work as a geodetic operation it is unnecessary to dwell; the measurement of an arc of meridian 65° in amplitude would be a gain to geodesy so vastly important as alone to justify its inception. But this is not all. By an additional chain of triangles from Egypt along the coast of the Levant and through the islands of Greece, the African arc might be connected with the Roumanian and Russian arc, so as to form a continuous chain of 105° in amplitude, extending from Cape Agulhas to the North Cape—the longest arc of meridian measurable in the world.

This object Gill has ever since constantly kept in view, and has never lost any opportunity of forwarding it.

Meanwhile, during the later stages of the field-work in Cape Colony and Natal, questions connected with the delimination of the boundary between British and German territory in S.W. Africa had sprung up. That boundary is defined by an agreement between the Governments concerned which was signed at Berlin in July 1890. It is defined to the south by a line commencing at the mouth of the Orange River, and ascending the north bank of that river to the point of its intersection by the 20th degree of east longitude, and, running then northwards along the meridian to the point of its intersection by the parallel of 20° south latitude, then eastward along that parallel to the point of its intersection by the 21st degree of east longitude, and thence northwards to the point of its intersection by the parallel of 18° south latitude.

Mr Bosman had executed a chain of triangles from the neighbourhood of Vryburg westward to the 20th meridian. This chain rested on a base-line measured by Major Laffan, of which he also determined the orientation and the latitude and longitude of one of its extremities by astronomical observations, exchanging telegraphic signals for the latter purpose with the Cape Observatory. It should be mentioned to Mr Bosman's credit that, although his work was paid for by the Bechuanaland Government at the tariff rates of secondary survey, Mr Bosman made it his ambition to render the work fit for incorporation as an integral part of the geodetic survey. He procured a Repsold 10-inch theodolite at his private cost, and came to the observatory for practical astronomical training, and he made a rigorous least square solution of the complex figures of which some parts of the chain were composed.

Digitized by Google

The work of Bosman and Laffan practically settled the position of the 20th meridian in the neighbourhood of the Orange River, and as far northwards as Reitfontein; but administrative troubles soon arose further northwards, where there appeared to be an uncertainty of 18 or 20 miles as to the true position of the 20th meridian.

A temporary settlement of outstanding difficulties was made by Germany agreeing to withdraw from certain points near the boundary in dispute, and Great Britain undertaking that Bosman's triangulation should be extended northwards to the 22nd degree of south latitude.

Matters were in this state of friendly suspense when Gill visited England in 1896, and was consulted by the Colonial Office as to the means necessary to carry this promise into effect.

He then pointed out that from Reitfontein (the northern point of Mr Bosman's survey) the 20th meridian crossed the Kalihari Desert—a country so flat and waterless that it would be difficult, if not impossible, to triangulate it. If, therefore, the triangulation had to be extended northwards, it would have to be carried through German South-West Africa, and it was unreasonable to expect that a work which would thus be of such advantage for the survey of German territory should be carried out entirely at British expense. He was accordingly instructed to proceed at once to Berlin and endeavour to come to some provisional agreement with the Foreign Office there.

The result of that mission was an agreement that Bosman's triangulation should be connected at both its eastern and western extremities with the geodetic survey of Cape Colony and continued northwards to the 22nd parallel of south latitude, thence along that parallel to the 21st degree of east longitude, and for a short distance northwards along the latter meridian, the work to be done by a joint commission, and the cost of the survey north of Reitfontein to be equally divided between the Governments concerned.

Major (afterwards Lieutenant-Colonel) Laffan, R.E., was appointed English Commissioner, and Lieutenant Wettstein German Commissioner, and the direction of the work was placed by both Governments concerned in Gill's hands.

Lieutenant Wettstein at a later stage of the work was replaced by Lieutenant Doering.

The Commission assembled at Reitfontein, Gordonia, in November 1898. The Commissioners encountered many serious obstacles in their work on account of the difficult and waterless character of the country—in fact, some of the triangulation points were 40 miles distant from the nearest water supply; in other places much time and labour were required to clear trees and scrub; and the work was not brought to a close till October 1903.

Meanwhile Mr Alston was employed by the Government of Cape Colony in connecting the eastern and western extremities of Bosman's triangulation with the geodetic circuit in Cape Colony. This work was completed in 1899.

Meanwhile also, in 1894, Gill urged on the late Cecil Rhodes the great scientific and practical value of commencing geodetic work in Rhodesia, and of the possibility of that work becoming part of the greatest arc of meridian in the world. Such an arc would also form a basis for the co-ordination of all detached surveys through a most important and still unsurveyed part of Africa, and be a fit precursor of his great scheme for a Cape to Cairo railway.

Mr Rhodes was very sympathetic, but declared that Rhodesia was in the first place in need of roads, bridges, and other essential works, and he felt its resources must first be directed to these objects, but in the course of two or three years he hoped to set the work on foot. When later (in 1897) Earl Grey, as Administrator of Rhodesia, on Gill's strong representation, sanctioned the commencement of the work, Mr Rhodes not only took a deep interest in it, but when it had nearly reached the Zambesi, he promised that funds should be provided to carry it to Lake Tanganyika. The field-work in Southern Rhodesia was carried out under Mr Alex. Simms, formerly a computer at the Cape Observatory, who had there qualified as a surveyor, and who was afterwards in charge of one of the field-parties engaged in the geodetic survey of the Transvaal and Orange River Colony. It is unnecessary here to enter into a description of the many difficulties encountered in the work on account of rains, smoke of grass fires, etc., which left only a few months available in each year for field-work.

The work was suspended during 1902 on account of the war, and recommenced in 1903. Gill selected Dr Tryggve Rubin as officer in charge of the work in Northern Rhodesia. He had been a member of the Swedish Russian expedition for measurement of the Spitzbergen arc of meridian in the summer of 1901, and was leader of the expedition which completed that work in 1902. After residence for three weeks at the Cape Observatory, he sailed for Chinde on 29th April 1903, accompanied by Dr F. O. Stoehr, M.B. (surgeon of the expedition), and Messrs Edward Stroud and Paul Chapman as assistants. They reached Chinde on 12th May, where they were detained a week in landing and reshipping their instruments for river transport to Feira. The party then proceeded to Fort Jameson, where the equipment of the expedition with native carriers was completed, and finally reached its field of operations at Feira on the Zambesi on the 13th of July. The season had been very dry, grass fires had

Digitized by Google

begun, and any work beyond reconnaissance, beaconing, and astronomical observation was rendered impossible by the smoke which completely obscured the horizon. On the way from Fort Jameson to Feira reconnaissances were made for a base-line, and an excellent site was selected, of nearly ten miles in length, on a plain alongside the River Loangwa, near its intersection with the parallel of $-15°$. A considerable amount of line-clearing and beaconing was then done, but the dense smoke of the grass fires greatly hindered progress. Dr Rubin was therefore instructed to proceed with the demarcation of a portion of the Portuguese boundary which runs due south from the Zambesi, near Zambo, and to fix, by astronomical observations, the point where the 15th parallel of south latitude crosses the River Loangwa.

Mr G. Tyrrell M'Caw, who was appointed Chief Assistant to Dr Rubin, left for Feira *vid* Salisbury on 5th October, having spent a month at the Cape Observatory for training in astronomical work. He took with him a second theodolite and nickel steel wires for the Jäderin base apparatus. The reconnaissance, beaconing, and boundary work occupied Dr Rubin and his party until April 1904.

The work of the Geodetic Survey was then recommenced and the triangulation was carried northwards as far as Machechetti and Mokokomo. During September the operations were seriously delayed by haze, dust, and smoke from grass fires, so that further triangulation became impossible. The members of the expedition were therefore assembled on 4th October at the site of the base-line.

The clearing of the line from bush, etc., was a very laborious operation, and this, with other preliminary work, occupied the party till 18th November. The Jäderin base-measuring apparatus, on arrival at Feira, had been deposited in the Government stores there, and the woodwork of the wire-stretching apparatus was almost entirely destroyed by the ravages of white ants; seven out of the ten central blocks of the tripods had also to be replaced by new ones. The repairs were satisfactorily done by Mr H. Johnston, a farmer, who lived near the site of the base-line, and he fortunately happened to be a good carpenter.

The $2\frac{1}{2}$ metre standard—kindly lent by the Russian Government—had been lodged in the storehouse of the African Lakes Corporation, Ltd., and its cases were not attacked by ants. The actual measurement of the base was begun on 25th November. At first the progress of measurement was very slow, as it was found very difficult to train natives to work; but as the work progressed its speed improved, although it never reached the rate obtained by good European and American parties: the maximum amount measured in one day was 1920 metres on 14th December. The concluding (southern) terminal of the base was reached on 17th January. The remainder of the month was occupied in recomparison of the wires and in copying, checking, and reducing the base measurement.

The triangulation was resumed early in February and continued until the end of April 1895, but many difficulties and delays arose from attacks of fever, and interruptions of work by haze, mist, and rain, which latter on one occasion lasted continuously for a fortnight.

The work of reconnaissance from Ulungu northwards was undertaken by Dr Stoehr, who was compelled to carry it more to the eastward than had been originally intended, owing to a high flat ridge, called Ngoli, which runs from east to west about ten miles north of Ulungu and cuts off all view to the north. Also due north of Ulungu the country is high but very flat, forming further northwards the watershed between the Loangwa and the Luapula (Congo) water systems. But, towards the Loangwa river eastwards, the plateau, although not reaching so high a level, is cut by rivers into steep mountains which offer longer sight-lines. The reconnaissance across the continental watershed, from the line Mesengule—Mtsense to Mukowonshi—Chipala, forms one large complex figure of 13 points and 29 sides, the reconnaissance of which was completed by Dr Stoehr in August.

In December 1905 and January 1906 Dr Stoehr completed the reconnaissance of the survey northwards to latitude $-10°$. Both the season and the country were more favourable. The months in question are the most favourable for such work, for it is only during or immediately after the rainy season that it is easy to identify the hills from their outlines, *i.e.* without the aid of helio-signals. This part of the survey passes entirely through country drained by the upper tributaries of the Luapula (Congo) River.

Meanwhile Dr Rubin and Mr M'Caw were busily occupied from April 1905 with the triangulation from Machechetti and Mokokomo northwards. A persistent haze was encountered in June, whilst July was clear—and a similar experience was encountered the following year.

In August and September one can seldom see further than 15 or 20 miles, but work can generally be continued if aligned marks for the use of heliostats have been previously erected.

These conditions, coupled with occasional mistakes on the part of the natives employed as signallers, created frequent delays, because the only available method of communicating with a distant point was by going on foot, and personal inspection by a European assistant was necessary in all cases of the kind. Dr Rubin had struggled manfully

Digitized by Google

and conscientiously with these difficulties, but, for some still unexplained reason, he ceased all communication not only with the Cape, but also with his relatives in Sweden.* His report covering the period immediately preceding 30th April 1905 was received at the Cape on the 5th of July of the same year; but from that date onwards Dr Rubin not only made no further reports from the field, but failed to answer any of the many letters addressed to him. Sir David Gill was thus unable to reply to requests from the British South Africa Company for reports on the progress of the work, and was compelled finally, on the 3rd of January 1906, to report to the Company the cause of his inability to do so. On the 13th of February a letter dated 27th January was received from the Company's Secretary communicating the decision of the Board, viz., "(1) to bring the survey to a point from whence it may, at some subsequent period, be again carried on without the necessity of retracing any steps already taken; (2) to defray the cost of the homeward journey of the officials engaged on the work; . . . but under no circumstances is the expenditure to extend beyond June, by which date the Board is of opinion that the survey party will have received sufficient notice of their withdrawal."

The grounds for this decision were stated to be induced "solely by the need of retrenchment on all work other than of absolute necessity." A strong appeal was at once made by Gill to the Board to reconsider this decision and to allow the work, now so far advanced, to be carried to Lake Tanganyika; but the same reasons were repeated, and the original decision was adhered to.

On the 24th of February 1906 Dr Rubin received notice of the Company's decision, with instructions to complete all work south of latitude $-12°$ and bring his party to Fort Jameson not later than the end of April. In the beginning of April 1906 the party converged to meet at Mpika, except Dr Stoehr, who took another way home (*viâ* Karonga). On his hurried journey to Mpika, Dr Rubin contracted a fever that confined him to bed for a fortnight, and was thus prevented from seeing Mr Stroud and Mr Chaplin before they left. After their departure Mr M'Caw joined Dr Rubin in the camp where he lay sick. Meanwhile, on the 25th of February, Dr Rubin wrote to Mr R. Goode, the Acting Administrator, stating that "under his agreement he was entitled to six months' leave with full pay, on condition that he rendered such assistance to the computation of the work as Sir David might desire—and that he was willing to exchange computation for field work and to continue the triangulation as far northwards as possible, on condition that his travelling expenses and the pay of his native assistants was provided." He concluded a long letter on these lines, stating "that his sole reason for making this offer was his desire to see his work completed by work at his own expense with aid of native assistants." Gill advised that if Dr Rubin would undertake to send regular reports of his doings, and if the Administrator (on whom the decision must rest) approved, he would be glad if Dr Rubin would continue field work for six months, instead of giving aid in computations. Gill recommended that in this case the best plan would be to complete the triangulation and astronomical observations as far as latitude 12° south and then beacon the points northwards as far as time would allow. This plan would simplify the completion of the work at a future time when funds were available.

No definite answer was given to Dr Rubin's proposal, except that Mr M'Caw was permitted to remain until the end of June, when he left the field and returned to Fort Jameson *en route* for England *viâ* the Cape. Meanwhile no reports came from Dr Rubin; and the Administrator, Mr Codrington, on the 16th of August 1896, sent him the following telegram, dated Fort Jameson, 16th August 1906:—

From Administrator to Dr Rubin, 16th August 1906.

You are hereby instructed to discontinue all work and expenditure on the Geodetic Survey from the date of receipt of this notice and to return at once to Fort Jameson, where you are required to clear up several questions connected with your accounts, after which you will leave for the Cape A reply to this message should be sent by bearer to the Magistrate, Fife, who will communicate it to me by telegraph.—ROBERT CODRINGTON.

Dr Rubin thereupon sent special messengers to Fife (the nearest telegraph station) with the following letters and telegrams:—

To the Officer in charge of Telegraphic Office, Fife.

Sir,—I should be obliged if you would despatch the wire on enclosed paper. In payment I enclose a cheque for 30s. The balance kindly return by the messengers. Kindly tell the bearers to wait for the telegraphic reply to my message.—I have the honour to be, Sir, etc.—TRYGGVE RUBIN.

Telegram from Dr Rubin to Sir David Gill, received at Cape Town 30th August 1906.

Administrator instructs me to discontinue work and return to Fort Jameson and Cape. Are these instructions confirmed by you?—TRYGGVE RUBIN.

* In December Gill received from Dr Rubin's mother in Sweden an anxious letter, dated 28th November 1905, inquiring as to her son's health, adding that the last news she had from him was dated the 5th June, and that several most important business letters had been forwarded to him from Sweden, to which no replies had been received.

Digitized by Google

Telegram from Dr Rubin to Administrator, sent from Camp 24th August 1906, *reaching Fife Telegraph Station 30th or 31st August* 1906.

Your wire of 16th August received on 23rd August. Presuming that the instructions given are in conformity with Gill's intentions, I am preparing to leave on the receipt of his answer to my telegraphic inquiry.—TRYGGVE RUBIN.

The Administrator's immediate reply was as follows :—

Telegram from Administrator to Dr Rubin, dated 31st August 1906.

My orders must be obeyed explicitly without reference to Sir David Gill. You will be held personally responsible for any expenditure incurred in consequence of your neglect of orders, and all payments on account of your salary will be suspended from this date.—ROBERT CODRINGTON.

Gill's reply, sent 31st August 1906, was as follows :—

Astronomer to Rubin: Fife, N.E. Rhodesia.

Your wire of yesterday: Chartered Company have stopped funds, due to your entire neglect to answer letters or report regularly to them or me. I have no alternative but to confirm Administrator's instructions. Before leaving deliver report and all books and papers connected with survey to Administrator. I sail for England on 3rd October.*

This latter message did not reach Dr Rubin until the 7th of December, because his messengers were sent back by the officer at Fife so soon as the Adminstrator's reply came. Subsequent events are perhaps best explained by the following extracts from a long letter written to Sir David Gill by Dr Rubin on his voyage home from the Cape in July 1907 :—

The return of my messengers without your telegraphic reply gave me a welcome opportunity to bring the triangulation a bit further north without direct disobedience to you. I could do so with so much more rejoicing as the delay of your telegram was not caused by any neglect of mine, but by the officer in charge of Fife station.

I therefore immediately wrote to Mr Codrington, acknowledging the receipt of his telegrams, exposing the view I was holding about the matter under dispute, explaining the reason why I had not yet got your telegram, and expressing the hope that the official at Fife was forwarding same by special messenger. At the same time *I accepted the personal responsibility for any expenditure caused by my disregard of his orders.* . . .

My expectation that your telegram would be forwarded by a new special messenger from Fife was not fulfilled. In fact, it was *posted*, and therefore went to Fort Jameson and waited there until my arrival there in March 1907. I had of course ordered all my mail to Fort Jameson, since I was to return immediately there according to instructions from Mr Codrington. For reasons explained above I was by no means anxious to receive your order, and since it had gone astray through no fault of mine, I didn't feel called upon to do anything towards bringing it to me, anyhow, not before I had obtained the object of my ambitions. I would first bring the triangulation to such a point where I could leave it with satisfaction, and then inquire what had become of your telegram.

Since I was at that time leaving Chinsali district and moving into Kasama and Tanganyika districts, there was also every prospect that I should be left undisturbed in that sparsely populated country, particularly after I had ordered my mail to Fort Jameson and therefore lost every direct connection with the local Government offices.

However, the Administrator, presumably alarmed by your many telegraphic inquiries, sent a local official to find my whereabouts and interview me regarding my plans. This was on 22nd November.

To this interviewer (Mr Osborne) I explained my views, which you know from above, and said that I was not anxious to get your telegram and would do nothing towards finding it, before I had reached a certain point of latitude. In the "Memorandum" that I gave him after our interview, I also disclaimed any rights to pay or travelling expenses after end of August, except passage home and salary for September and October (which months were part of my six months' leave; but for which pay had been detained).

Through Mr Osborne those concerned became aware of the fact that I had not received your wire of the 31st August, and a copy of same was sent from Fife, which reached me the 7th of December on Mpange Hill (latitude 9° 41′).

Receiving your wire, I immediately recalled my boys, who were reconnoitring round latitude 9°, and prepared to leave. On 13th December I left Mpange and arrived at the end of the month at Chinsali, a native commissioner's station, having measured on the way the angles on Kaseshya. Having got new carriers, I left Chinsali on the 2nd of January 1907, arriving at Fort Jameson on the 13th of March.

On the way I took those two angles left unmeasured by Mr M'Caw and myself, when reconnoitring in the middle of previous year (1906), for reasons referred to above. The work thus done on my return journey was of course quite contrary to my instructions, but was essential unless the arc should be left two degrees of latitude shorter. Even considering the delay caused by the work thus done, my return journey to Fort Jameson required more time than usual; but you must remember that the orders of recall were much contrary to my wishes, and that I could not be expected to show any enthusiasm in executing the same. I also had to go through books and papers of the Geodetic Survey.

My delay in returning seems to have caused new alarm. . . .

In Fort Jameson I delivered all books and papers concerning the Geodetic Survey as per your order, and settled the outstanding economical questions.

I left Fort Jameson for Broken Hill (the rail head) on the 25th of March, arriving there on the 22nd of April.

It was a great relief to all concerned when Dr Rubin finally arrived at Fort Jameson in safety and handed over his books and papers in good order.

It seemed to be impossible to make him understand that official work cannot be properly conducted in the absence of reports regarding its progress; for no management can be justified that is ignorant of the details of its

* Gill sailed for England on the day mentioned; he officially retired from his office as H.M. Astronomer on the 19th of February 1907

Digitized by Google

expenditure, nor is effective direction of work possible without knowledge of the needs and difficulties that arise in course of its execution. If only Dr Rubin could have been persuaded to explain, even briefly but at reasonably frequent intervals, what he was doing and the difficulties that he encountered, these difficulties might have been to some extent overcome, and the work would doubtless have proceeded to its legitimate conclusion without interruption. But, notwithstanding frequent urgent letters and telegrams demanding an account of his proceedings, no information could be extracted from him. Dr Rubin's last report, covering the period immediately preceding the 30th of April 1905, was received at the Cape on the 5th of July of that year. Thus, excepting his telegram of the 30th of August 1906, above quoted, Gill received no report from his executive officer for two years. It can hardly be wondered at if, in such circumstances, the situation became intolerable.

Dr Rubin's attitude of mind and mistaken views regarding the obligations of his office and his relations with those to whom he was officially responsible are sufficiently indicated in his own account of his proceedings, above quoted. This is the more to be regretted because it is impossible not to recognise the true scientific spirit of the man, and to respect the earnestness and self-sacrifice shown by him in his endeavour to complete the survey.

The history of the Survey of Northern Rhodesia has been given at greater length than that of other parts of South Africa because, although the results are fully computed, funds have not yet been provided for printing, whilst full accounts have been printed of all other sections of the Geodetic Survey.

On the conclusion of the war in 1901 Gill was engaged in much correspondence with Lord Milner, the Transvaal Officials, and the Intelligence Department of the War Office, on the subject of the Survey of the Transvaal and Orange River Colony. Lord Milner had become convinced of the fact that amongst the first essentials to good government are good maps of the country, but he felt that it would be premature to attempt a systematic commencement of the survey operations until 1902.

At Lord Milner's invitation Gill visited Johannesburg early in July 1902 to discuss survey questions and arrange preliminaries for starting the work. Gill's other duties rendered it impossible for him to accept the executive superintendence of the work, although he was ready and willing to act as its scientific adviser. He recommended that application should be made to the War Office for the services of Colonel Morris, R.E., (then commanding the Royal Engineers in Cape Town), as Superintendent of the Survey; and made the following suggestions :—

(1) The general principle should be accepted that the cost of the survey be ultimately divided between the Transvaal and the Orange River Colonies in proportion to the area surveyed in each.

(2) That the whole of the salaries and other costs of the two surveys should be paid for in the first instance by the Government of the Transvaal.

These recommendations were adopted by the Executive Council on the 10th of July 1902, and at the same time "the programme of the principal triangulation proposed by Sir David Gill was approved as a basis for the Ordnance Survey."

On Gill's return to the Cape he addressed a letter to the Colonial Secretary, Pretoria, dated 5th August 1902, containing detailed proposals and estimates of expenditure for the survey, and these were at once adopted and sanctioned.

Colonel Hoskyns, R.E., sailed from England on the 24th of September 1902 to relieve Colonel Morris from his duties as C.R.E. at Cape Town, so that the services of the latter would be available for the geodetic survey of the Transvaal about 25th October.

Gill's connection with the Geodetic Survey of the Transvaal and Orange River Colony was defined as follows :—

HIGH COMMISSIONER'S OFFICE, JOHANNESBURG, S. AFRICA,
14*th October* 1902.

SIR,—The Governments of the Transvaal and the Orange River Colonies have, as you are aware, resolved to undertake an Ordnance Survey, and, in accordance with your advice, have appointed Colonel Morris, R.E., C.B., C.M.G., Superintendent of the Survey in question.

Having regard to the active interest which you have taken in the promotion of accurate survey operations in South Africa, and knowing your desire to promote the extension of the Great Geodetic Arc along the 30th Meridian which you have projected and already so far carried out, I am desirous of having your advice on all matters connected with such operations in South Africa. It seems to me that in this way only can that unity of purpose and design be maintained which is essential for the efficient and economical arrangement of the work in the different Colonies, and their combination as a harmonious whole.

As all accurate survey operations in South Africa subsequent to 1879 have been carried out either under your direction or in accordance with plans laid down by you, I trust that I may reckon on your assistance as Scientific Adviser to the Governments of the two Colonies in all matters connected with survey operations, and I enclose a copy of Colonel Morris' letter of appointment, in

Digitized by Google

writing which I ventured, basing myself on your verbal assurances, to assume that you would be prepared to accept that honorary position.

In the meanwhile I should be glad if you would take steps to secure the instruments necessary for the work—the cost of which, I understand, will not exceed £1000.—I have the honour to be, Sir, your obedient servant,

(Signed) MILNER, *Governor.*

Colonel Morris reached Pretoria on the 3rd of November 1902, and, having reported for duty as Superintendent of the Survey, began organisation of the work.

The reconnaissance of the country, for the selection of points for the triangulation chains, was carried out by Lieutenants W. A. de C. King and T. N. Dunman, R.E., in 1903 and the first half of 1904, and by Captain C. H. Ley, R.E., from 30th October 1903 until November 1904.

The beaconing was carried out by four beaconing parties, each party being provided with an open spring cart, five mules, one horse, and three natives. Their work may be summarised as follows :—

		No. of Points.
Mr S. B. Morgenrood	1903 January 26–June 6	12
,, ,,	1904 February 9–December 13 . . .	36
Mr J. F. Gill	1903 July 17–1904 December 2 . . .	35
Mr C. de C. Middleton	1904 January 25–October 20 . . .	27
Mr C. E. Ezzey	1904 August 25–1905 July 31 . . .	64
		174
Add 11 base terminals		11
		185
Deduct 5 points discarded		5
Total		180 stations.

The following base-lines were measured :—

Site of Base.	S. Lat.	E. Long.	Duration of Measurement.	Length (miles).	No. of Sections.
	° ′	° ′			
Belfast	25 35	30 4	1903 July 1–1903 Aug. 21 . . .	11·8	8
Ottoshoop	25 44	25 37	1903 Sept. 11–1903 Oct. 23 . . .	10·8	8
Wepener	29 50	27 1	1903 Nov. 15–1904 Jan. 15 . . .	13·5	6
Kroonstad	27 36	27 7	1904 Jan. 28–1904 Apr. 30 . . .	12·3	6
Houts River	23 43	29 17	1904 May 27–1904 June 30 . . .	21·1	8

The Belfast base-site was the training ground for the base measuring party, and four different sites in the neighbourhood were roughly surveyed before final selection was made: the ultimate decision as to the site was arrived at on 28th March 1903. The base-party consisted of seven Europeans and eleven natives, and was trained for three months by Mr Robinson, until the arrival of Mr Simms on 28th June 1903, who took over responsible charge of all base measurement. The other base-lines were selected in advance by Colonel Morris, and were measured in rapid succession. This is unquestionably the most economical and efficient plan, because the organisation and training of a base-line party is a costly part of the work, and both the speed and quality of such work grow with practice.

At first only one trigonometrical party was employed in the field, viz. that under Captain H. W. Gordon, R.E., which commenced its work at Newcastle, Natal, towards the end of July 1903, and completed the observation of seventy-six points by the end of August 1905.

Captain Gordon was transferred on 25th August 1905 to the Swaziland Survey, but returned to the service of the Geodetic Survey from 1st February to 1st July 1906, for the reconnaissance, beaconing, and observing of a subsidiary chain of points between Cable Hill and Observatory Hill, Johannesburg. His party is responsible for the following work :—

Chain.	Miles of Chain.	No. of Points.	Months to Complete.	Points per Month.
Newcastle to Belfast	170	19	14	2·4
Belfast to Ottoshoop	300	15	...	...
Newcastle to Kroonstad . . .	130	11	6	4·7
Kroonstad to Kimberley . . .	205	17	...	...
Hopetown to Wepener	185	14	3	4·7
	990	76	23	3·3
Cable Hill to Observatory . . .	34	14	2	7·0
Totals . . .	1024	90	25	...

Digitized by Google

On completion of the base measurement a second theodolite party became available under Mr Simms and commenced observing in the neighbourhood of Pretoria. Mr Simms' party completed the following work during the period 15th August 1904 and 28th February 1906 :—

Chain.	Miles of Chain.	No. of Points.	Months to Complete.	Points per Month.
Pretoria through Basutoland to Cape Colony .	440	39	10	3·9
Belfast to the Limpopo . . .	240	18	7	2·6
Totals . . .	680	57	17	3·4

After his return from reconnaissance, in November 1904, Captain Ley reorganised and equipped his party for triangulation, and between 6th January and 28th August 1905 observed the triangles in the following chains :—

Chain.	Miles of Chain.	No. of Points.	Months to Complete.	Points per Month.
Kimberley to Ottoshoop . . .	240	51	6	8·5
Driekuil to Kroonstad	100	12	2	6·0
Totals . . .	340	63	8	7·9

The original intention was to carry lines of levelling from mean sea-level along all the lines of railway in the Transvaal and Orange River Colony, breaking off at suitable points to connect with the base-lines. The necessary time and funds, however, were not available, and, in consequence, accurate geodetic levelling was confined to the following chains—between August 1904 and August 1905.

	Miles.
1. From Mean Sea-level at Lorenzo Marques through Belfast to Pretoria . .	349
2. From Pretoria through Germiston to Potchefstroom	134
3. Germiston to Kroonstad	126
	609

The work was executed by Mr V. A. Lowinger, with the exception of 102 miles from Machadodorp to Balmoral, which was done by Mr A. Cochrane, of the headquarter staff, during the temporary illness of Mr Lowinger.

Thus the heights of three of the base-lines above mean sea-level remain dependent on determination by observations of vertical angles. The *probable errors* are as follows :—

Wepener Base through	830	miles of chain	. . . . .		±10 feet
Ottoshoop	,, 520	,, ,,	. . . . .		± 8 ,,
Houts River	,, 440	,, ,,	. . . . .		± 7½ ,,

The trig. stations at Observatory Hill (Johannesburg) and Muckleneuk, being comparatively close to bench marks of the main system of levelling, were connected by short supplementary lines of levelling, so that four points are available for comparing the system of heights determined by vertical angles with the direct system of levelling, viz. :—

	Levelling.	Vert. Angles.	L—V.
Belfast Base	6399·9 feet	6391·4 feet	+8·5 feet
Observatory Hill . . .	5936·1 ,,	5930·0 ,,	+6·1 ,,
Kroonstad Base . . .	4684·4 ,,	4691·7 ,,	−7·3 ,,
Muckleneuk	4748·6 ,,	4739·8 ,,	+8·8 ,,

These discordances are within the limits of probable error of the results from vertical angles.

After all this work had been completed there remained on the Arc of Meridian a gap between the Limpopo and the triangles in Southern Rhodesia, near Gwelo. Gill had urged the Directors of the British South Africa

Digitized by Google

Company to take advantage of the opportunity offered by the presence of a trained trigonometrical survey party in the neighbourhood to complete this link in the chain, but his efforts at a distance of 6000 miles from headquarters were unavailing. He therefore appealed to Sir George Darwin, as President of the British Association and British representative of the International Geodetic Commission, to ascertain whether funds could not be obtained elsewhere. Sir George was then on the point of leaving for America to attend the Franklin Commemoration, and was absent from England from the 14th of March to the 1st of May.

On 7th May 1906 Gill received the following message by cable :—

Money possibly forthcoming—hold party together.—DARWIN.

Gill cabled that a decision was necessary before 24th May, and received the following reply on 19th May :—

I have procured £1600 for completion survey. Can you guarantee it will be finished for this sum? Impossible obtain more.—DARWIN.

Meanwhile Gill ascertained that whilst Captain H. W. Gordon, R.E., the officer selected, was still available for the work, "the delay had necessitated the return of all transport equipment, which must be purchased *de novo*," and that unanticipated charges for railway transport in Rhodesia would be made. Subsequently the transport difficulty was to some extent overcome by the kind consent of the Council to allow all transport to be drawn from the Transvaal Government, especially the immunised animals; a fair valuation to be put upon all items on taking over, and again on their return after completion of the work (estimated to last eight months); on returning the items the difference between the two valuations only to be charged.

On the 31st of May Gill cabled through the B.S.A. Company :—

Tell Darwin, Transvaal has granted loan of transport. Morris and I believe can now finish connection for £1600. Delayed reply explained by post. Cable immediate advance £300.—GILL.

On the 8th of June Gill received from the Secretary of the B.S.A. Company, Cape Town, £300, and a copy of the following cable message :—

Inform Sir David Gill from Darwin £1600 has been granted, only provided he guarantees finish connection.

Gill cabled in reply :—

Gill accepts responsibility, acts of God and the King's enemies excepted.

Thereafter the sum of £200 was placed to the credit of Captain Gordon at Buluwayo on the 1st of August and on the first day of each succeeding month.

It remains to explain how the financial question was solved in England through the exertions of Sir George Darwin. The Royal Geographical Society was the first to come forward with a subscription of £100—the largest sum that its finances at the time could muster; the Royal Society subscribed £300; Mr Wernher on behalf of the firm of Wernher and Bight subscribed £100; and Sir George Darwin himself offered, if necessary, to be responsible for £100. The British South Africa Company then, on Sir George Darwin's suggestion, agreed to give £800, provided that a like sum was raised by subscription and a guarantee given that the work would be completed for £1600. Then the British Association offered £300, and Gill undertook the guarantee.

Finally, thanks to the fact that all the Government railways concerned generously agreed to accept half-rates, and to the energetic and economical management of Captain Gordon, the work was completed, and the payment of a few pounds of excess cost was not exacted by the B.S.A. Company.

. . . . . .

So much for the history of the operations of the Geodetic Survey of South Africa. An accurate general idea of the work actually done can be best gathered from inspection of the map. The reader should note that the triangles indicated by dotted lines are all completed, they are merely used to distinguish the work of different observers. Thus the dotted lines in Southern Rhodesia indicate the triangles measured by Captain Gordon, which connect Mr Simms' triangulation in Southern Rhodesia with the triangulation of the Transvaal; the other dotted lines indicate Mr Alston's triangles, connecting Mr Bosman's triangulation in Bechuanaland with the system of the Geodetic Survey.

Digitized by Google

The results of the geodetic operations may be stated as follows:—

Base Lines.

The base lines included in the Geodetic Survey of South Africa are tabulated below in the order of the meridian arcs which are chiefly controlled by the base lines in question:—

Approximate Longitude of Arc.	Name of Base.	South Latitude.	Length in feet at M.S.L.	Measured with
		°	feet.	
19° E.	Zwartland Base	33	42819·065	Colby compensating bars.
	N. Damarand Base	23	31029·97	Steel and Brass Jäderin wires.
26° E.	Port Elizabeth Base*	34	17058·498	Troughton and Simms steel bars.
	Wepener Base	30	71031·77	Invar wires.
	Kimberley Base†	29	14760·304	Troughton and Simms steel bars.
	Kroonstad Base	28	65065·58	Invar wires.
	Ottoshoop Base	25½	57199·62	,, ,,
The great Meridian Arc along 30° E.	Natal Base	29½	10800·457	Troughton and Simms steel bars.
	Belfast Base	25½	62298·13	Invar wires.
	Houts River Base	24	111427·72	,, ,,
	Inseza Base	20	62019·67	Steel and brass Jäderin wires.
	Gwibi Base	17½	71165·276	Nickel steel and steel Jäderin wires.
	Loangwa Base	15	57088·41	Invar wires.

The Zwartland Base.

Of the accuracy of measuring with the Colby apparatus (employed by Maclear in his measurement of the Zwartland Base) the writer cannot speak with experience; but, from Maclear's frequent comparison of the apparatus with the standard bar, there can be little doubt that the accidental error of measurement was smaller than that due to uncertainty as to the absolute length of his standard bar.‡

The 10-Foot Iron Standard.

This same iron standard bar, with new supplementary terminal lines, was compared in 1886 at the International Bureau of Weights and Measures, Sèvres, with the international standards (*Geodetic Survey of South Africa*, vol. i. pp. [11]–[18]). The limits of certain accuracy attainable when a bar of 10 feet, for example, is compared with metric standards, is stated by M. Benoit to be about 1 : 1,000,000.§ This is therefore the limit of absolute accuracy attainable in the base lines of the South African Survey.

The Troughton and Simms 10-Foot Measuring Bars.

The steel bars of the Troughton and Simms base apparatus are provided with bent mercurial thermometers, the bulbs of which are inserted in mercury-wells bored in the steel bars, and, as the latter are enclosed in wooden boxes and protected in course of measurement from direct sunshine by canvas-covered huts, they necessarily show very approximately the instantaneous temperature of the bars.

These bars were compared at a variety of temperatures with the iron standard bar, firstly in 1888 at the Royal Observatory, Cape of Good Hope, and secondly in 1906 at Pretoria. The results for the length of each bar at temperature 23° C. (on the assumption that the standard bar remained unchanged from the time of its standardisation at Sèvres in 1886) were:—

	Bar A.	B.	C.	D.	E.	Sum.
	mm.	mm.	mm.	mm.	mm.	mm.
1888	3048·1662	3048·1616	3048·1852	3048·1734	3048·1862	15240·8726
1906	·1639	·1629	·1867	·1746	·1821	·8702
					Difference =	0·0024
					or 1 :	6,350,364

* The length of this base as measured with the bars was only 6000 feet; it was prolonged by triangulation with the 18-inch theodolite, the observations being made at night, and the theodolite and illuminated marks were micrometrically centred (*Geodetic Survey of South Africa*, vol. i. pp. 56–67).

† Only 6000 feet measured with the bars; base extended by triangulation as at Port Elizabeth (*loc. cit.* pp. 68–78).

‡ For a discussion of the errors of Maclear's standard bar and the Zwartland base, see *Geodetic Survey of South Africa*, vol. i. pp. 66–71.

§ See *loc. cit.*, vol. i. pp. 64–65.

Digitized by Google

It may therefore be assumed that between 1888 and 1906 there was no sensible relative change between the lengths of the steel measuring bars and the iron standard bar. The details of these comparisons are given in the *Geodetic Survey of South Africa*, vol. i. pp. [46]–[55] and vol. v. pp. 165–180 respectively.

The Natal, Port Elizabeth, and Kimberley Base Lines.

The base lines at Natal, Port Elizabeth, and Kimberley were measured directly with the 10-foot steel bars, and each section of each base was measured both forwards and backwards; the accidental probable errors of measurement can therefore be computed from the inter-agreement of these results, and are as follows:—

	Natal Base.*	Port Elizabeth.†	Kimberley.‡
Accidental probable error of measurement	in. ± 0·024	in. ± 0·015	in. ± 0·026
or	1 : 4,500,000	1 : 4,833,000	1 : 2,769,000

The Transvaal and Orange River Colony Base Lines.

When measuring these lines the Troughton and Simms steel bars were taken to the site of each base, and a ground base of 480 feet, terminating in fine holes drilled in the upper surface of a truncated bronze pyramid cemented into deeply sunk concrete blocks, was laid down at each base site and measured from time to time with the 10-foot bars. The local ground base was also measured with the invar wires before and after measurement of each section of each base, and in this way the instantaneous length of the measuring wires was determined. Each section of each base was measured forwards, then backwards, and finally forwards again. The details of these operations will be found *loc. cit.*, vol. v. pp. 211–218; the resulting *accidental* probable errors of measurement for the different bases, as derived from the inter-agreement of these measures, are as follows:—

Belfast.	Ottoshoop.	Wepener.	Kroonstad.	Houts River.
±1 : 2,110,000;	±1 : 3,764,000;	±1 : 6,767,000;	±1 : 4,723,000;	±1 : 6,533,000.

The Base Lines in Southern Rhodesia.

The Inseza Base and the Gwibi Base, measured by Mr Simms in Southern Rhodesia, were the first in which the Jäderin apparatus was used in South Africa, and it was not found possible to send the Troughton and Simms steel bars for employment as standards at either base site; reliance had therefore to be placed on comparisons made at the Cape Observatory before and after the measurement of each base. The apparatus was of the original Jäderin form, and the wires were stretched by spring balances.§

At the Inseza Base pairs of steel and brass wires were employed in measurement, and each 80 feet length was measured in terms both of the steel and brass wires; the order of their employment was reversed in alternate 80-foot lengths so as to eliminate, as far as possible, the effect of increasing or falling temperature.

Three pairs of wires were employed. The lengths of the wires were determined at the Royal Observatory before they were sent to Rhodesia and after their return. Their lengths, when both components of a pair are of the same lengths, were found to be:—

From comparisons.	Pair AB.	Pair CD.	Pair EF.
	mm.	mm.	mm.
1898 April 19–May 3	24381·05	24382·07	24380·60
1898 Oct. 22–Nov. 1	24378·87	24381·84	24379·94

The pair CD was not employed in measurement of the base, and was used for determining the instantaneous length of the measuring wires AB and EF at the base site.

The following table gives the result of the forward and reverse measures of the base. The wires AB and EF

* *Geodetic Survey of South Africa*, vol. i. pp. 46–55.
† „ „ „ „ pp. 56–67.
‡ „ „ „ „ pp. 68–78.
§ In the Transvaal and Orange River Colony base lines the wires were stretched by weights hanging over pulleys.

Digitized by Google

were used alternately, so that each subsection of the base was, as a rule, measured forwards with one pair and backwards with the other pair :—

Length of Inseza Base measured "direct and reverse."

Section.	Subsection.	Wires used.	Length (Direct).	Length (Reverse).	Wires used.	Discordance.	Discordance on Total Length of Section.
			mm.	mm.			
I.	*a*	*	1560611·98	1560613·95		1 : 792,500	1 : 259,000
	b	EF	2948959·90	2948940·52	AB	1 : 152,000	
II.	*a*	AB	4949423·04	4949403·47	EF	1 : 253,000	1 : 184,000
	b	AB	251706·63	251706·51	EF	1 : 2,097,000	
	c	AB	999636·19 *	999622·20	EF	1 : 71,400	
III.	*a*	AB	974933·53	974933·34	EF	1 : 513,000	1 : 4,746,000
	b	AB	975124·62	975120·81	EF	1 : 256,000	
	c	AB	609162·00	609147·96	EF	1 : 43,400	
	d	AB	731696·80	731691·89	EF	1 : 149,000	
	e†	AB	975550·59	975546·53	AB	1 : 240,000	
	f	EF	589808·09	589822·17	AB	1 : 42,000	
	g	EF	2194684·82	2194700·47	AB	1 : 140,000	
	h	‡	1145966·74	1145965·11	‡	1 : 753,000	

Thus, so far as *accidental* error of measurement is concerned, the Inseza Base, although very inferior in accidental and systematic accuracy when compared with those above mentioned, may be considered sufficiently satisfactory for a first experiment in Jäderin measurement, but liable to a possible *systematic* error due to changes in the standard pair of wires CD between the times of their comparison at the Royal Observatory, *i.e.* before and after the base measurement. This systematic error can, however, hardly amount to 1 : 100,000.

In the measurement of the Gwibi Base in Southern Rhodesia, a ground base line 400 feet in length was established. The extremities of this line were marked, as at the Inseza Base, by fine holes drilled in brass truncated pyramids cemented into sunken blocks of concrete 2 feet square and 4 feet deep. In addition to the "steel and brass" pairs of wires, AB, CD, EF, employed in the Inseza Base, two additional pairs of nickel-steel wires were added to the equipment, viz. P and PP and Q and QQ. Each of these last-mentioned pairs is composed of one wire of "invar" nickel-steel, and one wire of another alloy of nickel and steel having a coefficient of thermal expansion about the same as that of brass. These coefficients for the wires P and Q are only 1/17th part of the corresponding coefficient of steel or 1/31st part of that of the wires PP and QQ. All the wires were compared at the Royal Observatory in August and September 1900, before the measurement of the Gwibi Base (November and December), and again in January 1901, after measurement of the base. Only the wires P and PP and Q and D (the wire QQ having met with an accident) were used in the measurement of the base, and these wires were compared with the 400 feet ground standard before and after the measurement of the base. The 400 feet ground standard was measured with all the wires on November 3, 4, and 5 (before the measurement of the base), and its length was computed from the wire-constants determined at the Cape in August and September 1900. The ground standard was also measured (after completion of the base measurement) just before the wires were sent to the Cape, and its length was independently computed from the wire-constants determined on arrival at the Royal Observatory there in January 1901. There are thus two independent determinations of the length of the ground-standard, viz. :—

	I.	II.
	mm.	mm.
From standardisation and measurement *before* the base measurement . . .	121923·68	121923·31
From standardisation and measurement *after* the base measurement . . .	121924·13	121923·35

If the length of the ground standard is derived only from the wires which were not subjected to the hard work of base measurement (that is, if the results from P and PP and Q and QQ and D are excluded), the results given in column II. are obtained. The value adopted was the mean of the comparisons before and after base measurement.

The increased experience in use of the apparatus led to a marked diminution in the accidental probable error

* Measured three times, viz. "direct" (AB, EF, AB), and three times "reverse" (AB, AB, EF).
† Inadvertently measured in both directions with same pair of wires.
‡ Measured twice, viz. "direct" by EF, AB, and "reverse" by AB, EF.

Digitized by Google

of measurement, as will be evident from the following table, where the lengths of the measuring wires were determined from comparison with the ground-standard :—

Section.	Sub-Section.	Length from P and PP.	Length from Q and D.	Discordance.
		mm.		
I.	*a*	1646525	1646530	1 : 329,000
	b	4020152	4020130	1 : 183,000
II.	*a*	3144434	3144433	1 : 3,100,000
	b	1595383	1595382	1 : 1,600,000
III.	*a*	3715304	7758926	1 : 431,000
	b	4043640		

The Gwibi Base may thus, for all practical purposes, be considered satisfactory, and is probably absolutely accurate within 1 : 300,000.

The Loangwa Base (N.E. Rhodesia).

This base was measured with 20-metre invar wires, of which four were supplied. Two of these, A_{21} and A_{22}, were used in the actual measurement of the base, and two, A_{23} and A_{24}, were reserved as comparison (or standard) wires.

The measuring wires A_{21} and A_{22} were compared very frequently during the measurement of the base with the standard wires A_{23} and A_{24}, and also with a $2\frac{1}{2}$-metre steel standard, kindly lent by the Russian Government.

The base was measured between 26th November 1904 and 17th January 1905, the lengths of the four wires were determined at the International Bureau of Weights and Measures, Sèvres, in July 1903 (before the wires were sent out) and in August and September 1905 (after the measurement of the base), and the Russian $2\frac{1}{2}$-metre steel standard was compared at the National Physical Laboratory, Teddington. Each 20-metre interval between the tripods was measured with the two wires A_{21} and A_{22}, and the whole base was measured twice in opposite directions. As the results of measurement and of these comparisons the length of the base was determined, viz. :—

$$6936\ R_{25} + 58802 \text{ mm.}$$

$$\text{or } 867\ A_0 + 59369 \text{ mm.},$$

where R_{25} denotes the length of the Russian standard at 25° C., and A_0 is the mean length of the standard wires $= \frac{1}{2}(A_{23} + A_{24})$.

The value of R_{25} as determined at Teddington was found to be :—

250·0095 centimetres at 15°·00 C. (hydrogen scale)
250·0240 ,, ,, 20°·00 C. ,, ,,

and the mean coefficient of expansion between 2° C. and 30° C.,

$$11^{\text{mm}}\cdot64 \times 10^{-6} \text{ per } 1° \text{ C. (hydrogen scale).}$$

The thermometer B attached to the bar (thermometer A was broken in transit) reads too high relative to the hydrogen scale as follows :—

At	3°·35	11°·9	18°·9	23°·9	30°·5	35°·5
	+0°·57	+0°·60	+0°·62	+0°·60	+0°·45	+0°·37

From these data, together with the expression of the length of the base in terms of R_{25}, the length of the base is found to be

17401·362 metres.

The results of the comparisons of the standard wires at Sèvres were :—

July 1903.	August and September 1905.	Monthly Change.
m. mm.	m. mm.	mm.
$A_{23} = 20 + 1{\cdot}84$	$A_{23} = 20 + 2{\cdot}15$	+0·0119
$A_{24} = 20 + 2{\cdot}43$	$A_{24} = 20 + 2{\cdot}70$	+0·0104

If the comparisons of 1905 are adopted, and the increase of length per month is $+0^{\text{mm}}\cdot015$ (instead of the average change between the comparisons, viz. 0·0112), the length of the base comes out

17401·367 metres,

a result which is practically identical with that derived through the Russian standard.

Digitized by Google

If the wires are supposed to increase in length in simple proportion to the time (*i.e.* at the monthly rate of $0^{mm}\cdot0112$) the computed length of the base becomes

17401·397 metres.

But from the behaviour of similar wires used in the Survey of the Transvaal and Orange River Colonies, of which the lengths have been frequently determined between 1903 and 1906, Mr Robinson concluded that the increment of length in such wires is not constant; that, in fact, the wires at first contract and afterwards increase in length and that the rate of increase in length about the epoch 1905·0 would be $0^{mm}\cdot015$ per month. Mr Robinson had in fact adopted that figure for his report before the results of the Teddington comparisons of the Russian $2\frac{1}{2}$ metre bar were known. The mean of the two nearly identical values derived from comparisons with R_{25} and A_0 was adopted, and, since the mean height of the base above mean sea level is 1140 metres and the corresponding reduction to sea level is 0·948 metres, the adopted value of the length of the Loangwa Base at mean sea level becomes 17400·416 metres or 57088·49 feet.

The North Damarand Base.

This base of verification was measured by Major Laffan and Lieut. Wettstein between the excentric marks of the trig. points "Gill's Wald" and "Danckelmann's Kuppe," employing Jäderin wires which had been compared at the Cape Observatory shortly before the measurement, and which were again compared after the base measurement. A detailed account of the operation is given in Appendix I. of the *Report on the Boundary Survey between British Bechuanaland and German S.W. Africa*"* (E. S. Mittler und Sohn, Berlin), issued jointly by the Colonial Office, London, and the Colonial Department, Berlin.

Although laborious efforts were made by the Commissioners to attain a high accuracy in the result, an unfortunate accident to the Paris wires R, RR and S, SS deprived them of the full advantages to be obtained from measures with nickel-steel. This compelled ultimate reference, for the instantaneous lengths of the wires at the epoch of measurement, to comparisons made with a steel tape suspended in an enclosure or long hut, built of stakes and branches of trees, and covered at top ends and along its north side with grass.

The following table gives the results of determinations at the Cape Observatory of the lengths of the steel tape and wires before they were sent into the field and after their return :—

	I. May 1900.	II. January 1901.	II.–I.
	mm.	mm.	mm.
Steel tape at 70° F.	24381·79	24381·92	+ 0·13
Nickel-steel wires R=RR . . .	24380·56	†	...
,, ,, S=SS . . .	24381·14	†	...
Steel and brass wires C=D . . .	24382·50	24382·33	− 0·17
,, ,, E=F . . .	24382·40	24382·16	− 0·24

Employing the results derived from comparisons with the steel tape whose length at 70° was assumed invariable, the length of the base was found to be as follows :—

Direction of Measurement.	Wires employed.	Resulting Lengths of Sections of Base.		
		m.		m.
Forward	R and RR	2706·916		
Backward	R and RR	·930	Section I.	2706·916
Forward	S and SS	·899		
Backward	S and SS	·921		
Forward	E and F	3390·548		
Backward	C and D	·547	Section II.	3390·547
Forward	R and RR	3365·556		
Forward	E and F	·540	Section III.	3365·562
Forward	C and D	·590		
				9463·025
Reduction to mean sea-level (1396 m.)				−2·075
Reduction to beacons Gill's-Wald and Danckelmann's Kuppe . . .				−3·100
Measured distance between Gill's-Wald and Danckelmann's Kuppe . .				9457·850
The same computed through the triangulation from the Geodetic Survey of Cape Colony				9457·440
			Difference =	0·410
			or	1 : 23·000

* See also *loc. cit.*, pp. 110–114. † These wires having been kinked in the accident above referred to, were not recompared at the Cape.

Digitized by Google

Probable Errors of Observed Angles.

The probable error of measurement of an angle in each of the surveys has been computed for each section of the survey. The error of a triangle is the difference between the sum of the observed angles of the triangle and $(180° + \epsilon)$, where ϵ is the spherical excess. The probable error of an observed angle is then

$$\pm 0{\cdot}6745 \sqrt{\frac{\Sigma\Delta^2}{3N}},$$

where $\Sigma\Delta^2$ is the sum of the squares of the errors of the triangles, and N is the number of triangles. The results are :—

For Sir T. Maclear's triangles employed in Geodetic Circuit	±0″·62
,, Cape Colony and Natal with 18-in. theodolite	±0″·49*
,, ,, with 10-in. Repsold	±0″·32
,, Southern Rhodesia ,, ,,	±0″·34
,, Transvaal and Orange River Colony ,,	±0″·33
,, Chain connecting Southern Rhodesia and Transvaal	±0″·39
,, North-Eastern Rhodesia	±0″·37
,, British Bechuanaland	See footnote †
,, German South-West Africa	±0″·59
,, Mr Alston's triangles connecting the extremities of Bechuanaland Survey with Geodetic Circuit	±0″·58

Definitive Corrections of Observed Angles.

In all figures contained in the chains of triangulation which are more complex than simple triangles the corrections requisite to produce geometrical consistency were computed by least squares. In computing the circuit corrections, the measured lengths of all base lines, reduced to mean sea-level, were regarded as fixed, and the angular corrections were thrown upon the single triangles in the chain.

The closed circuits of triangulation in Cape Colony, as given *loc. cit.*, vol. i. [that is to say, the points Hog's Back—Breakfast Vlei (near King William's Town) and Elandsberg II.—Bester's Kop (near De Aar)], were regarded as fixed. The corrections necessary for geometrical consistency were then rigorously computed for all the other closed circuits in the survey. The details of these computations and the resulting corrections will be found *loc. cit.*, vol. i. pp. 153–190 and vol. v., pp. 125–150 respectively.

The Meridian Arcs.

The outcome of the whole work as regards Meridian measurement may be divided into three arcs, viz. :—

A, approximately along the meridian of 19° E. longitude.
B ,, ,, ,, 26° E. ,,
C ,, ,, ,, 30° E. ,,

Arc A depends in the south on Sir Thomas Maclear's arc, part of which has been re-observed by Colonel Morris and entirely re-reduced to the gridiron system of the Geodetic Survey of Cape Colony; then on Alston's triangulation to the Orange River, then on Bosman's triangulation along the 20th meridian to South Reitfontein, and thence onward to latitude 22° South, through Damaraland, by theAnglo-German Boundary Commissioners, Laffan, Wettstein, and Doering.

The astronomical amplitude of the extreme stations of the arc is 12° 25′ 18″·39; the geodetic amplitude (Clarke's elements) 12° 25′ 18″·31.

This arc, properly speaking, rests on two base lines, viz. the Zwartland Base, measured by Sir Thomas Maclear, and a base of which one of its terminals is the point Gill's Wald, measured by the Anglo-German Boundary Commissioners.

	Metres.
The length of the latter base, computed through the long chain of intervening triangles from one of the sides of the geodetic circuit, is	= 9457·850
The directly measured length was	= 9457·440
Difference, Computed – Measured, is therefore	= 0·410
	or = 1 : 23,000

* See *Geodetic Survey of South Africa*, vol. i. p. (81).

† Section I., 174 angles, flat country sides 3–8 miles (mirage) ±1″·41
,, II., 147 angles (rather better country and less mirage) ±0″·92
Section III. Better country ±0″·66
,, IV. ,, (good country) ±0″·42

Digitized by Google

The geodetic amplitude of the arc has, however, been computed solely from the Zwartland Base, and it would have been increased by about 0″·5 if the Commissioners' base had been taken into account. There is unquestionable evidence of strong local deviation of the direction of gravity at Klipfontein and Kamies Sector Berg.

The reason why the northern base was not taken rigorously into account in the computations is, that it is desirable in so long an arc to measure at least one other base, say in the neighbourhood of Reitfontein, and it is only waste of time, therefore, to compute corrections to the chain, which will certainly have to be replaced by others at a later date.

The geodetic amplitude could be greatly strengthened by a direct connection southwards, across the Orange River, between the sides Spitzkopje—Karasberg, with the sides Naib—Agenys of Alston's triangles. We may confidently rely on the scientific spirit of Germany to measure at least another base and increase the number of astronomical stations on this arc.

Arc B.—This arc rests on closed circuits, supported by five very accurate base lines, and is of all desirable geodetic accuracy. Its geodetic amplitude is 8° 32′ 7″·42.

Arc C represents what has been measured of the proposed great arc along the meridian of 30° E. longitude, and which it is to be hoped will ultimately be extended to meet Struve's arc of meridian which runs through Russia along the same meridian to the North Cape in Sweden—the longest arc of meridian that is measurable on the earth's surface. If this work is completed its geodetic amplitude would be 105°; up to the present time its connected amplitude south of the equator is 23° 55′ 17″·13.

The results subsequently given may be regarded as nearly definitive; north of the Limpopo they are not quite so. The triangulation executed by Mr Simms in Southern Rhodesia (shown in solid black lines in the map as far north as the side Manyangau—Tondongwe) was discussed and reduced to a consistent geometrical figure having a scale consistent with the lengths of the Inseza and Gwibi Base lines. The original position of the station Salisbury was derived from Talcott determinations of astronomical latitude, and telegraphic determination of difference of astronomical longitude from the Cape Observatory; the initial Azimuth was based on direct astronomical observations at Salisbury. In this way the preliminary geodetic latitudes and longitudes of the stations which are given in vol. iii. of the *Geodetic Survey of South Africa* were computed. The subsequent completion of the chain of triangles (shown in dotted lines) connecting the points Standus—Wedza of the Southern Rhodesian chain with the northern points Pont—Dogola of the Transvaal system, rendered it possible to unite the whole of the geodetic triangulation in South Africa into the homogeneous system previously used south of the Limpopo. To refer the results of the present survey to this system it was first necessary to reduce the geographical co-ordinates of the Southern Rhodesian stations, given in vol. iii., to the same system.

The following data, relative to the points Standus and Wedza, were derived from the southern connection, by computation through the connecting chain of triangles, referred to the general geodetic system (vol. v. p. xxxvii), as compared with the original results dependent on the isolated astronomical observations at Salisbury :—

	Standus.		Wedza.	
	New.	Sec. of Original.	New.	Sec. of Original.
S. latitude . .	20° 21′ 54″·699	58″·202	20° 14′ 55″·891	59″·434
E. longitude . .	29 35 54·599	55·201	29 51 42·042	42·669
Height above M.S.L.	4114 ft.	4152 ft.	4335 ft.	4379 ft.

	New.	Sec. of Original.
Bearing of Wedza from Standus . .	244° 56′	31″·62	40″·51
,, Standus from Wedza . .	64° 51′	2″·81	11″·67

The difference between the new and originally derived length of the side Standus—Wedza was found to be only 2·64 inches or 1 : 453,000, and was neglected. The corrections applied to the original data of vol. iii. at Standus and Wedza were therefore :—

	Latitude.	Longitude.	Azimuth.
Standus	−3″·503	−0″·602	−8″·890
Wedza	−3″·542	−0″·628	−8″·860

and all the vertical heights were diminished 40 feet.*

The corrections to the data relating to the survey of Southern Rhodesia derived from vol. iii., in order to

*The original datum for the vertical height was derived by levelling from the data of the railway survey at Buluwayo.

Digitized by Google

refer the whole to the geodetic system, were traced through from point to point, starting from the points Standus and Wedza, by means of the following formulæ :—

$$\Delta\phi_1 = \Delta\phi_0 - \frac{S}{M}\sin\alpha_0\Delta\alpha_0$$

$$\Delta L_1 = \Delta L_0 - \frac{S}{M}\sec\phi_0\cos\alpha_0\Delta\alpha_0 - \frac{S}{N}\sec\phi_0\tan\phi_0\sin\alpha_0\Delta\phi_1$$

$$\Delta\alpha_1 = \Delta\alpha_0 + \frac{S}{M}\tan\phi_0\cos\alpha_0\Delta\alpha_0 + \frac{S}{N}\sec^2\phi_0\sin\alpha_0\Delta\phi_1,$$

where ϕ_1 and ϕ_0 denote the latitudes of the initial and terminal ends of any line; L_1 and L_0 the longitudes of the points; α_0 the bearing of the point 1 as seen from point o; S the distance between these points; and M, N, respectively, the radii of curvature of the Earth's surface along and perpendicular to the meridian.

In this manner were computed the following data with regard to the points Manyangau—Tondongwe, which form the northern terminal points of the Southern Rhodesian chain, and the starting points for computation of Dr Rubin's chain of triangulation in North-Eastern Rhodesia* :—

	Manyangau.	Tondongwe.
S. latitude	16° 25′ 41″·213	16° 22′ 32″·423
E. longitude	29° 36′ 10″·542	30° 15′ 42″·418
Height above M.S.L.	4589 feet	3886 feet
Bearing of Tondongwe from Manyangau		265° 22′ 46″·40
,, Manyangau ,, Tondongwe		85° 11′ 36″·64

The length of the Loangwa Base computed through the triangulation from Manyangau was found to be

57088·69 feet,

which agrees very closely with its length at M.S.L. derived from measurement (p. cxvii), viz.

57088·49 feet,

a discordance = 1 : 285,000.

This agreement bears ample testimony to the excellent quality of the work done by Captain Gordon, Mr Simms, and Dr Rubin. Until another base line has been measured near Lake Tanganyika it is unnecessary to make any correction for scale, so that the geographical co-ordinates have been computed without reference to the base lines measured in Southern or North-Eastern Rhodesia, because their inclusion could not at present be considered definitive, nor would their present inclusion sensibly affect the resulting geodetic latitudes.

Astronomical Observations.

The observations for latitude have been made throughout by the Talcott (Horrebow method), with probable errors for the resulting latitudes which vary from ±0″·10 to ±0″·30. The Azimuths have been determined by meridian transits of close circumpolar stars, with, as a rule, an equal number of observations of stars at upper and lower transit; the results have small probable errors.

The Geodetic Co-ordinates.

The origin of the Geodetic co-ordinates is the adopted Station Buffelsfontein, with the following data :—

Bearing of Zuurberg from Buffelsfontein	183° 58′ 15″·000
Log. length of line Buffelsfontein Zuurberg (in feet)	[5·4332521]
Latitude of Buffelsfontein	33° 59′ 32″·000
Longitude	25° 30′ 44″·622
Elements of the Earth from Clarke's *Geodesy*, p. 319	a = 20926202 ft. b = 20854895 ,,

* The corrected geographical co-ordinates and bearings of the triangulation in Southern Rhodesia will be published along with the account of the geodetic survey of N.E. Rhodesia.

Digitized by Google

Comparison of Astronomical and Geodetic Observations.

The following tables give a comparison between the Astronomical and Geodetic results for each of these arcs :—

A.—*Arc near Meridian of* 19° *E. longitude.*

	Longitude.	Latitude.			Height above M.S.L.	Azimuth A. – G.
		Geodetic.	Ast.	A. – G.		
	° ′	″	″	″	feet.	″
Cape Point	18 29	34 21 6·67	6·63	– 0·04	688	
Zwart Kop (C.C.)	18 27	34 13 33·68	32·41	– 1·27	2031	
Royal Observatory	18 29	33 56 3·06	3·54	+ 0·48	51	– 5·92
Tygerberg	18 35	33 51 12·76	14·74	+ 1·98	1357	– 3·02
Robben Island	18 23	33 48 52·70	53·45	+ 0·75		– 7·06
Klipfontein (Sector Station)	18 29	32 41 53·26	60·68	+ 7·42	379	
Heerenlogements Berg	18 35	31 58 9·89	9·32	– 0·57	2380	
Kamies Sector Berg	18 8	30 21 21·09	29·23	+ 8·14	5130	+ 1·09
North End (Sector Station)	18 34	29 44 17·81	17·93	+ 0·12	3606	
Upington	21 14	28 26 37·03	36·53	– 0·50		
Vet Rivier	20 0	26 49 17·19	16·23	– 0·96	2828	– 2·49
Rietfontein (Latitude Station)	20 4	26 44 40·40	41·00	+ 0·60	2774	– 2·89
Gibeon	17 46	25 7 22·51	23·28	+ 0·77	3444	– 6·73
Gills Wald	18 47	22 57 44·14	43·02	– 1·12	4580	– 4·80
Oliphants Kloof	20 5	22 11 24·76	27·78	+ 3·02	4365	– 4·02
Epukiro	20 57	21 55 48·36	48·24	– 0·12	3842	– 3·61

B.—*Arc near Meridian of* 26° *E. longitude.*

Cape St. Francis	24 46	34 10 56·62	57·46	+ 0·84	395	
Buffelsfontein	25 31	33 59 32·00	Origin		919	Origin
Port Elizabeth (Longitude Point)	25 37	33 57 60·63	53·26	– 7·37	211	– 0·90
Coega Kop	25 37	33 46 8·18	0·28	– 7·90	472	
Drivers Hill	26 42	33 17 11·29	13·16	+ 1·87	2778	
Zuurberg	25 34	33 14 55·56	66·30	+ 10·74	3244	
Berlin	27 37	32 53 27·82	34·61	+ 6·79	1699	+ 0·53
Grassberg	24 30	32 51 27·27	37·82	+ 10·55	3360	
Gwecweni	28 2	31 52 23·13	28·43	+ 5·30	4198	– 5·08
Lubisi	27 30	31 46 30·74	41·54	+ 10·80	5823	
Tafelberg	25 10	31 38 44·41	44·73	+ 0·32	5436	
Xerka	27 59	31 17 53·59	5·59	+ 12·00	6212	
Bendeard	27 59	31 6 36·72	47·60	+ 10·88	9085	
Hanover	24 26	31 4 2·02	2·01	– 0·01	4687	– 0·43
Helvelyn	27 17	30 42 10·23	8·55	– 1·68	8156	
Aasvogelberg	27 3	30 17 43·01	37·63	– 5·38	7251	
De Peet (C.C.)	23 56	30 14 51·94	51·36	– 0·58	4342	
Wepener Base (S. end)	27 3	29 54 49·28	46·31	– 2·97	5252	
Wepener Base (N. end)	26 59	29 43 35·93	33·63	– 2·30	4803	+ 3·26
Orange River (C.C.)	24 16	29 39 53·40	52·92	– 0·48	3893	– 1·60
Kimberley (Long Point)	24 43	28 38 5·60	4·04	– 1·56	3800	+ 1·07
Schoongesicht	26 24	28 19 25·29	22·75	– 2·54	4654	
Theronskop	26 47	28 18 60·81	59·72	– 1·09	5177	
Braunzijn Kop	26 56	27 50 61·84	59·95	– 1·89	4815	
Zoetvlei	26 22	27 50 28·39	29·29	+ 0·90	4317	
Boschrand	27 11	27 44 24·60	23·62	– 0·98	4752	+ 2·40
Driekuil	26 2	26 45 32·30	28·49	– 3·81	5054	+ 5·46
Ottoshoop Base (N. end)	25 55	25 38 49·20	44·14	– 5·06	4690	+ 3·36

Digitized by Google

C.—*The Great Arc of Meridian along 30° E. longitude.*

	Longitude.	Latitude.			Height above M.S.L.	Azimuth A. – G.
		Geodetic.	Ast.	A. – G.		
	° ′	° ′ ″	″	″	feet.	″
Umtata	28 39	31 35 46·55	49·46	+ 2·91	2848	– 1·10
Umtamvuna	29 57	30 44 16·43	18·03	+ 1·60	2602	– 2·12
Kokstad (Long. only)	29 26	30 33 5·45			4269	
Durban Observatory	31 0	29 50 45·21	47·40	+ 2·29		
Zwart Kop I.	30 15	29 35 32·14	33·05	+ 0·91	4758	– 2·42
Salt Lake	30 4	27 54 55·15	61·22	+ 6·07	4616	
Newcastle	29 56	27 45 37·44	38·42	+ 0·98	3909	– 1·96
Hermitage	29 21	27 45 3·97	3·02	– 0·95	7665	
Vierfontein	28 35	27 41 32·49	28·71	– 3·78	5823	
Kaal Kop II.	29 3	27 35 5·87	4·84	– 1·03	6388·3	
Inkwelo	29 50	27 31 8·93	14·07	+ 5·14	6809	
Gemsbokberg	29 26	27 27 27·17	23·77	– 3·40	O.R.C. 6870·5	
Belfast Base (S. end)	30 4	25 40 23·66	19·92	– 3·74	6399·9	– 2·44
Langekloof	29 59	25 37 6·75	1·95	– 4·80	6341·6	
Mare's Kop	30 11	25 34 39·36	35·47	– 3·89	6615·4	
Belfast Base (N. end)	30 4	25 30 6·62	1·44	– 5·18	6605·4	
Houts River Base (S. end)	29 14	23 51 30·62	27·45	– 3·17	4658·4	– 0·70
Schnells Kop	29 57	23 47 50·00	44·57	– 5·43	6228·8	
Houts River Base (N. end)	29 20	23 34 4·12	3·36	– 0·76	3707·2	
Loskop II.	29 20	23 29 7·92	7·14	– 0·78	4678·7	
Blaauwberg	28 59	23 4 14·50	59·47	– 15·03	6709·7	
Lejuma	29 26	23 1 26·81	17·97	– 8·84	5713·8	
Inugu	28 24	20 30 3·82	6·96	+ 3·14	4791	
Golati	28 36	20 29 7·86	12·28	+ 4·42	5051	
M'Quilembegwe	28 45	20 25 59·70	59·13	– 0·57	5033	
Thabas Inyorka	28 41	20 19 20·76	24·05	+ 3·29	4900	
Tsetsa	28 22	20 17 42·90			4657	+ 10·30
Buluwayo (Long Point)	28 35	20 9 8·22	1·28	– 6·94	4407	+ 9·66
Inseza Base (S. end)	29 9	20 5 53·13	53·65	+ 0·52	4904	
Inseza Base (N. end)	29 4	19 57 2·05	1·80	– 0·25	4470	+ 6·29
Gwelo	29 49	19 28 12·65	17·01	+ 4·36	4841	+ 8·66
Iron Mine	30 22	19 19 6·86	5·95	– 0·91	4864	
Zomtimba	30 13	19 16 9·23	8·67	– 0·56	4864	
Mahamara	30 17	19 4 27·14	26·15	– 0·99	4702	
Salisbury	31 2	17 50 21·73	25·29	+ 3·56	4998	
Marimba	30 50	17 46 55·09	53·94	– 1·15	4841	
Muneni	30 34	17 29 41·83	39·90	– 1·93	5106	
Baruka	30 6	17 19 21·55	21·83	+ 0·28	4457	
Umvukwe	30 41	17 11 37·17	33·28	– 3·89	5691	
Manyangau	29 36	16 25 41·21	34·89	– 6·32	4589	+ 13·44
Tondongwe	30 15	16 22 32·42			3886	
Msambamsu	30 0	15 53 54·46	50·03	– 4·43	4039	+ 14·35
Kapsuku	30 17	15 40 17·75	15·03	– 2·72	3482	
Kaurashisi	29 47	15 20 1·69	6·06	+ 4·37	4613	
Machechetti	29 54	14 56 35·42	36·72	+ 1·30	4351	
Mkokomo	30 30	14 46 51·37	53·18	+ 1·81	3956	
Chifukunyu	29 52	14 25 48·19	57·33	+ 9·14	4881	
Kweshi	30 40	13 57 36·87	38·22	+ 1·35	4588	
Ulungu	30 4	13 45 49·45	60·56	+ 11·11	4966	
Mtsense	31 6	13 14 36·05	51·32	+ 15·27	5416	
Msengulu	30 33	13 14 1·24	12·66	+ 11·42	5445	
Mabyuló	30 57	12 53 31·18	34·66	+ 3·48	5630	
Maienze	31 18	12 28 38·24	47·70	+ 9·46	5482	
Lavusi	30 52	12 23 43·44	49·05	+ 5·61	5889	+ 15·22
Iwangwe	31 37	11 59 19·68	32·39	+ 12·71	6018	
Chipala	32 1	11 26 46·36	55·54	+ 9·18	4702	
Mukowonshi	31 31	11 25 24·88	30·50	+ 5·62	5993	
Kangawakadi	31 30	10 14 29·34	38·90	+ 9·56	4729	
Mapange	31 41	9 40 49·42	58·52	+ 9·10	4723	

Digitized by Google

It remains to mention the services of those who have carried out the work.

First and foremost comes the name of Colonel (now Sir William) Morris. To him, and almost entirely to the work of his own hands and eyes, we owe the observations in Cape Colony and Natal—ten years of strenuous service in the field and one year in office work, given with a singleness of purpose and a devotion and enthusiasm which are beyond praise. To his foresight is due the fact that no accident happened to mar the progress of the work, and to his tact the fact that he and his party were everywhere welcomed and no objections were seriously raised to his entrance on farms or claims made for damage to property. The rapid progress and the high efficiency of the work in the Transvaal and Orange River Colony are the result of his great experience and administrative capacity.

The difficulties which must beset an International Commissioner in another country than his own were overcome by the patience and tact of Lieutenant-Colonel Laffan in the Anglo-German Boundary Survey, and high praise is also due to Lieutenant Doering, the German Commissioner, for his loyal co-operation. Both Commissioners had to carry out the work through a country presenting the greatest difficulties to survey operations. In some places the nearest water to the survey points was forty miles distant, and even then the supply was precarious; in others, heavy clearings of shrub and forest had to be made; and the great distances from points where repairs of waggons, etc., could be executed, largely increased the difficulties.

Mr Alexander Simms rendered most valuable service in Rhodesia, where he directed the field operations and made all the observations south of the Zambesi. During the wet weather transport was impossible, and soon after the rains ceased the natives began to burn the grass—a process that filled the air with such dense smoke that no horizontal angles could be measured. Thus the patience and endurance of the observer were most severely tried, and the greatest credit is due to Mr Simms for the way that he stuck to his trying work and the excellent results that he secured.

To Dr Rubin and Mr McCaw in Northern Rhodesia fell a very heavy and trying task. They had to encounter similar obstacles, and even greater ones than those encountered by Mr Simms, and to train natives in heliograph signalling,—a matter of the greatest difficulty, as natives are only willing to take short periods of service, and quit the work almost before they are trained. They devised simpler methods, which natives could be more readily taught, and which are less liable to failure. In this and many other ways they have shown an infinity of resource in trying and difficult circumstances.

Allusion has already been made (p. cxiii) to the excellent services rendered by Captain Gordon.

The survey owes much to the services of Mr Robinson, who has been long at the head of the computing staff, and has raised himself by his energy and talent to that position from that of a computer at the Observatory. Mr Lowinger has done valuable work in a like capacity.

The computation of the field work of Dr Rubin and Mr McCaw in North-Eastern Rhodesia, and of Captain Gordon's chain of triangles (connecting that work with the Geodetic Survey of the Transvaal), was made by Mr Whittingdale, of the Cape Observatory staff, under the direction of Mr S. S. Hough, H.M. Astronomer at the Cape. These results have not yet been published in detail, and are here given for the first time in so far as they relate to the Great Geodetic Arc along the meridian of 30° E. longitude.

To all these men and to their cordial co-operation the success of the Geodetic Survey of South Africa is chiefly due.

Addendum to Geodetic Survey.

With regard to the further progress of the Great Arc of Meridian. In the years 1906 and 1907 a joint Anglo-Belgian Boundary Commission was employed in surveying the region near the 30th meridian which lies between Lake Albert and the parallel of 1° south. The Colonial Survey Committee cordially accepted the opportunity, thus offered, to utilise a portion of the personnel of the joint Commission for the purpose of measuring that part of the arc which would traverse the region in question. The Belgian Government readily agreed to take part in the work, and decided to send out a specially qualified astronomer to make the necessary observations for latitude and azimuth. M. Dehalu, of the Liège Observatory, was selected, and he arrived at Taro in Uganda on the 18th of April 1908. The Government of the Transvaal generously placed two 10-inch Repsold theodolites at the disposal of the party, and the War Office and Admiralty both lent instruments. These were put in charge of Mr G. T. McCaw, who was selected as an assistant observer and left England on the 27th of December 1907. The

Digitized by Google

Royal Society, the Royal Geographical Society, the British Association, and the Royal Astronomical Society together contributed £1400 towards the cost of the work.

The stations extend from latitude 1° 10′ S. to 1° 10′ N. The results are so far published by the Colonial Survey Committee: *Report of the Measurement of an Arc of Meridian in Uganda*, Vol. I., containing the base measurement, horizontal angles, vertical measures, and geodetic values (London, published by H.M. Stationery Office 1912). Vol. II., containing the astronomical determinations of latitude, longitude, and azimuth, will be subsequently published in Brussels.

The Geodetic Survey of Upper Egypt, commenced under the direction of Captain Lyons, F.R.S., is making steady progress from the Mediterranean southwards, and one may venture to hope that it will be pushed forward until it reaches the southern limit of Upper Egypt.

From that latitude to 1° 10′ north, however, the immediate prospect of progress is still far from clear. But, having regard to the scientific importance of the work and its great practical utility as a basis for all future surveys, it is obvious that its execution cannot be long delayed. All modern experience goes to show that the sooner such work is done the better, for no one can tell at what moment questions as to the boundaries of spheres of influence may arise, creating occasionally formidable diplomatic difficulties when these boundaries have not been delimited, and when no accurate maps exist as a basis for their definition. The precise definition and beaconing of the boundary between British Bechuanaland and German South-West Africa (see pp. civ and cv) may be cited as a case in point. It had hardly been completed when the native war in the latter territory began; and, but for the exact beaconing of that boundary, it would have been impossible to avoid the numberless international difficulties which, in the case of an uncertain boundary, must have arisen between Britain and Germany, but which, by the exact definition of that boundary, were happily entirely avoided.

If these expectations are realised there would remain unfinished in Africa only that portion of the arc from latitude 1° 10′ S. to 9° 41′ S., which, except for about 70 miles in N.E. Rhodesia (viz., from the southern end of Lake Tanganyika to the northern point of Dr Rubin's survey), lies along the eastern side of Lake Tanganyika—that is to say, in German East Africa. Estimates for the cost of carrying out this survey have been prepared at Potsdam, and one may confidently trust to the scientific enterprise of Germany for its early execution.

The final connection of the African arc with that of Struve in Russia, by triangulation round the eastern end of the Mediterranean, is a matter that probably involves international co-operation; but its scientific importance is so great that, in one way or another, the work *must* be done.

Dr Helmert has kindly written to me as follows about the results of the South African Arc of Meridian :—

POTSDAM, *4th November* 1912.

"As to the results of the measurement of arcs of Meridian in South Africa I should call your attention to Dr Bahn's discussion in 1910 in the *Beiträge zur Geophysik von Gerland and Rudolph*,* vol. x. pp. 519–551, based on the data which you sent in manuscript. Dr Bahn has utilised 57 latitude stations in the neighbourhood of 30° of East Longitude and extending from Latitude $-9°\ 41'$ to $-34°\ 11'$. He finds it impossible to compute (from the data in question) both of the two unknowns, viz. a (the semi-major axis) and α (the compression). On that account he has made two separate computations :—

"1. Adopting $\alpha = 1 : 298{\cdot}3$ (Helmert from pendulum determinations)
he finds $a = a_{\text{Clarke}} + 58m \pm 179m$ (mean error) $= 6378307m$.

"2. Adopting $a = a_{\text{Clarke}} = 6378249m$
he finds $\alpha = 1 : 299{\cdot}2 \pm 1{\cdot}6$.

"From these data it is evident that the new arc indicates a somewhat larger terrestrial spheroid than that of Clarke. Adopting $\alpha = 1 : 289{\cdot}3$, it gives

$$a = 6378307m \qquad b = 6356925m,$$

whilst Clarke's values are

$$a = 6378249m \qquad b = 6356515m.$$

b is thus increased $410m$ above Clarke's value.

"The new arc thus confirms the result of the Coast and Geodetic Survey of North America (Hayford), which is several hundred metres larger than Clarke's."

* By the kind permission of Herr Wilhelm Engelmann, Leipzig, a translation of this most interesting article is given in Appendix IV.

Digitized by Google

THE PARALLAX OF THE MOON.

The direct determination of the parallax of the Moon was one of the principal objects of Lacaille's expedition to the Cape of Good Hope in 1751 (see p. v.). By comparing his observations with those made at different observatories in Northern Europe, and assuming the ellipticity of the Earth to be $\frac{1}{200}$, he obtained 3433″·1 for the constant part of the Moon's equatorial parallax; this is equivalent to 3424″·6 if the Earth's ellipticity is assumed to be $\frac{1}{300}$. Henderson, from his observations at the Cape in 1832 and 1833, made a great number of observations of the Moon's Declination with the mural circle; and, by comparing them with nearly simultaneous observations at Greenwich and Cambridge, derived the value 3421″·8 for the constant of Lunar Parallax when computed with the coefficients of Burkhardt's Tables, or 3422″·46 with the more accurate coefficients of Damoiseau;* the adopted value of the Earth's compression was $\frac{1}{300}$ (*Mem. R.A.S.*, vol. x. p. 294).

Breen (*Mem. R.A.S.*, vol. xxxii. p. 115), from observations at Cambridge, Greenwich, Edinburgh, and the Cape, derived 3422″·70 for the constant of the Lunar Parallax; and Stone (*Mem. R.A.S.*, vol. xxxiv. p. 11), from Cape observations (1856–61) combined with the corresponding Greenwich observations, derived 3422″·71, computed in both cases with the adopted value of $\frac{1}{300}$ for the Earth's compression. In neither one or other of the two latter discussions are the instantaneous equatorial points of the Transit Circle derived in a rigorous way.

In all these determinations of the Lunar Parallax the observers had placed the horizontal wire of the Transit Circle as a tangent successively on the upper and lower limbs of the Moon, or sometimes on one limb, sometimes on the other; the observations were then reduced to the Moon's centre—in the first case to the mean of the observations of both limbs; in the second, by the application of a correction depending on the assumed known semidiameter.

Such observations are subject to numerous sources of error. The amount of irradiation (or increase of the apparent over the true semidiameter) is a variable quantity dependent on the aperture and defining quality of the telescope, the brightness of the background of the sky, and on the character and steadiness of the atmospheric conditions of definition. Thus, even if the Moon's limbs had no irregularities, and if all observers placed the axis of the observing wire or spider web exactly tangent to the limb, considerable systematic errors would arise. But the Moon's limb is by no means a portion of a perfectly regular circle, and no two observers place the spider web in the same way tangent to the limb. The spider web has a very sensible diameter, so that, even if no irregularity of the limb and no irradiation existed and if the disc under observation was at rest, it is probable that no two observers would agree exactly as to the micrometer reading at which each would estimate the axis of the web to be a true tangent to the limb, because then the limb itself is hid by the web at the point of contact; there would therefore be a measurable personality in the observation even in these ideal conditions. When the uncertainty, thus created, is complicated by variable irradiation, irregularities of the limb and unsteadiness of the images, it is not surprising that in such observations large personal, as well as accidental, errors are found to result.

If instead of observing the limbs of the Moon it was possible to find some well-defined point or feature on the Moon's surface, the position of which relative to the Moon's centre is always known, most of the difficulties would disappear. Since the days of Bessel the crater Mösting A has been regarded, on the whole, as the most suitable object of the kind. It is a small circular crater of about 4″ in diameter situated not far from the centre of the Moon's disc, and its apparent position seems to be but little affected by change of illumination. Schlüter, under Bessel's direction, made a series of observations (during the period 1841 April 29 to 1843 November 6) with the Königsberg heliometer, of the distance of Mösting A from the Moon's limb in a great variety of position angles, for the purpose of determining the physical libration of the Moon and the mean position of Mösting A relative to the Moon's centre (*Ast. Beob. der K. Univ. Sternwarte zu Königsberg*, Bd. 38). These observations were reduced by Franz, and ephemerides of the position of Mösting A relative to the centre of the Moon, based on his paper ("*Darlegung der Ephemeridenrechnung von Mösting A*—Ast. Nach.," 3241), were published in the *Berliner Jahrbuch* from 1894 until 1907 inclusive. From 1908 onwards the ephemerides of Mösting A in the *Berliner Jahrbuch* are based upon Hayn's discussion of the Moon's libration (*Abhand. der K. Math. Phys. Klasse. Gessel. der Wiss.*, Bd. 30).† The physical libration is

* When comparing results for the "Constant of the Lunar Parallax" it is essential to remember that this constant will vary according to the mode of development employed in the theory. (See Professor Adam's "Note on the Constant of Lunar Parallax," *Mon. Not. R.A.S.*, vol. xl. p. 482.)

† Mr S. A. Saunder kindly forwards the following notes: "Hayn's results are based on the reductions of his own observations made with the filar micrometer at Leipzig and a series of heliometer measures made by Hartwig between 1877 and 1879 at Strassburg. The difference between the coefficients of the principal terms in the expressions for physical libration obtained by Franz and Hayn is about 0″·3 in (geocentric) longitude and 0″·2 in latitude. The difference in the geocentric co-ordinates of Mösting A amounts to 0″·02 in longitude and 0″·23 in latitude. Stratton in his re-reduction of Schlüter's observations (*Mem. R.A.S.*, vol. lix. part 4), obtains co-ordinates of Mösting A which differ from those of

Digitized by Google

included in all cases. The ephemeris of Mösting A in the *Nautical Almanac* depends, up to the present, on the results of Franz. The best ultimate determination of the Moon's Physical Libration will probably result from measures of the best Lunar photographs. M. Puiseux is now engaged in measuring a selection from the fine series of plates obtained with the Equatorial Coudé at Paris. It is very desirable, however, that the series should extend over a complete period of nineteen years.

Some time previous to his visit to England in 1904, Gill had made proposals for co-operating with the Royal Observatory, Greenwich, in making a fresh determination of the parallax of the Moon by meridian observations of the Lunar Crater Mösting A. In the course of that visit it was finally arranged with Sir William Christie (then Astronomer Royal) that regular meridian observations of the declinations of Mösting A and the Moon-culminating stars of the *Nautical Almanac* should be made, whenever practicable, at both Greenwich and the Cape, the series to commence after January 1905.

On account of possible errors in the tabular motion of the Moon and in the ephemeris of Mösting A, it seemed in the present state of the lunar tables to be essential for the highest accuracy to employ, in the determination of parallax, only observations made on the same night at both observatories.

It was not at first anticipated that so many as six years would pass before 100 nearly simultaneous observations at both observatories could be secured; indeed, it was not until the end of 1910 that the number in question was attained. The observations were reduced by Dr Crommelin, and the results were communicated to the Royal Astronomical Society in May 1911 (*Monthly Notices, R.A.S.*, vol. lxxi. p. 526).

Observations were made at Greenwich both with the Transit Circle and the Altazimuth, and at the Cape both with the reversible Transit Circle and with the old non-reversible one; but, especially at the Cape, it was not possible to provide observers for both instruments on every night.

At Greenwich both instruments were employed on 49 of the nights in question, at the Cape on 12 nights; whilst only on 3 nights was the Moon observed with two instruments at each observatory. The total number of nights on which the Moon's declination was observed during the period in question was at Greenwich 292 with the Transit Circle and 236 with the Altazimuth and at the Cape 151 with the old and 166 with the new Transit Circle,* this total yielding only 105 nights when observations were secured at both observatories; and of the 105 parallax determinations 4 had to be rejected as anomalous.

In order to avoid the effect of error in the adopted nadir-point, flexure, refraction, and division error of the circles, the equatorial point was determined from observations of the declinations of Moon-culminating stars. In ideal conditions the observed stars should be identical at both observatories, and their mean declination should be the same as that of the Moon. In future researches of the kind it would be desirable largely to increase the number of comparison stars, since (especially at Greenwich) it was found sometimes necessary to employ other fundamental stars than those provided in the programme. As, however, the latter were all well-known and well-determined stars and all the adopted declinations of the comparison stars employed were reduced to the same fundamental system, it is improbable that any very sensible systematic error is likely to arise from this source.

With the equatorial points derived from the observations of the comparison stars, the observed apparent N.P.D. of Mösting A was derived for each observation.

The tabular parallaxes were computed on two assumptions of the earth's ellipticity, viz. :—

$$\frac{a-b}{a} = 1/293{\cdot}5 \text{ and } 1/300,$$

and it was assumed that the value of the Log. sine of the horizontal equatorial parallax of Mösting A, as given in the *Berliner Jahrbuch*, is consistent with the parallax of the Moon's centre as given in the *Nautical Almanac* (viz. Hansen's Parallax, with Newcomb's correction applied to the Moon's Mean Anomaly). After reduction of the observations to geocentric N.P.D. by application of the computed parallaxes, the Cape observation was

Franz by 0″·54 in longitude and 0″·22 in latitude. Hayn thinks that his own formulæ can be relied upon to give the position of Mösting A relative to the Moon's centre within 0″·2: this is clearly too sanguine; the errors may well exceed 0″·50. Many attempts have been made to determine the physical libration, of which the most important are the observations of Schlüter, above mentioned; the values derived from them by Franz were generally accepted until Hayn, in 1894, published a memoir in which he severely criticised Franz's method of reduction; and, in another memoir, published in 1906, he derived a fresh series of values for the principal coefficients which were of about half the amount of those found by Franz. Dr Vökel, in reducing a short series of heliometer measures made by Michailouski at Kazan, showed that, in one of the steps most severely criticised by Hayn, Franz's method led to practically the same result as Hayn's, and a complete re-reduction of Schlüter's observations by Stratton has practically confirmed Franz's results and shown that the cause of the divergence between them and Hayn's must lie in the observations."

* In comparing these numbers with Greenwich, it should be noted that at the Cape, except in the early years, no attempt was made to duplicate observations on the same night, but only to secure an observation with *one* or *other* instrument on each possible occasion. The old Transit Circle was only used when it was necessary to delegate a special assistant for the work.

Digitized by Google

reduced to the same instant as the corresponding Greenwich one, the N.P.D. of the Moon's centre being interpolated with second differences from the *Nautical Almanac*, and the rate of change of the geocentric position of Mösting A with respect to the Moon's centre being taken from the *Berliner Jahrbuch*.

Each observation at Greenwich and the Cape should then give an equation of condition of the form

$$\frac{p_g + p_c}{p_o} \Delta p_o = \Pi_g - \Pi_c \quad . \quad . \quad . \quad . \quad . \quad . \quad . \quad . \quad (A)$$

where Π_g and Π_c are the observed N.P.Ds. at Greenwich and the Cape reduced to geocentric N.P.D.

„ p_g and p_c are the tabular parallaxes applied to the Greenwich and Cape observations to correct them to geocentric N.P.D.

„ p_o and Δp_o are respectively "Hansen's constant of Lunar Parallax" and its required correction to be derived from the observations.

Mr Crommelin, instead of solving the equations of condition by least squares, derived the correction Δp_o from each equation separately by means of the equation :—

$$\Delta p_o = \frac{p_o}{p_g + p_c} (\Pi_g - \Pi_c) \quad . \quad . \quad . \quad . \quad . \quad . \quad . \quad (B)$$

giving weight 2 to the value of Δp_o obtained when Mösting A was observed with both instruments at each observatory, weight $1\frac{1}{2}$ when observed with two instruments at one observatory and with one instrument at the other, and weight 1 when observed with one instrument only at each observatory.

He thus obtains on the two assumptions as to the Earth's ellipticity

$$e = \frac{a-b}{a} = 1/293{\cdot}5 \text{ and } 1/300$$

$$\Delta p_o = +0''{\cdot}50 \text{ and } +0''{\cdot}12,$$

or giving equal weight to all the determinations

$$\Delta p_o = +0''{\cdot}52 \text{ and } +0''{\cdot}14,$$

and he concludes "hence it appears that the result will be approximately the same for any reasonable system of weighting the separate days."

Assuming for simplicity

$$\Delta p_o = +0''{\cdot}51 \text{ for } \frac{1}{e} = 293{\cdot}5,$$

and giving equal weight to each determination of Δp_o, the *probable error* of one determination of Δp_o comes out $\pm 0''{\cdot}60$ and the *probable error of the mean result* $\pm 0''{\cdot}06$.

The number of + and − residuals is then exactly equal, and the distribution of the errors is very fairly symmetrical. Since the original paper in question was published, the Astronomer Royal has kindly communicated the results of another solution which Mr Crommelin has made, in which he assigns the farther weight $\frac{p_g + p_c}{p_o}$ to each separate value of the parallax as derived by equations of the type B. (This is practically equivalent to a least square solution of the equations of condition of the type A.) Mr Crommelin in this solution has farther given $\frac{2}{3}$ weight to the parallax values resulting from observations when the N.P.D. of the Moon is greater than 105°.

The mean result then becomes

$$\Delta p_0 = +0''{\cdot}48 \text{ for } \frac{1}{e} = 293{\cdot}5$$

$$= +0''{\cdot}10 \text{ for } \frac{1}{e} = 300{\cdot}0.$$

Or dividing the observations in order of time :—

$$\frac{1}{e} = 293{\cdot}5.$$

From the observations of 1905 and 1906	$+0''{\cdot}50$
„ „ „ „ 1907 and 1908	$+0''{\cdot}48$
„ „ „ „ 1909 and 1910	$+0''{\cdot}46$

Although the probable error of the mean result has not been rigorously computed, it seems evident that it will now be sensibly less than that which was derived from the original discussion, viz. $\pm 0''{\cdot}06$.

Mr Crommelin remarks that "the only source of error to which the method appears to be liable is that which

Digitized by Google

may arise from personality in bisecting the image of the crater" (or, to put it more rigorously, to difference in personality in bisecting the image of a star and of the crater), and that, "if there is a general tendency both at Greenwich and the Cape to bisect the crater either too high or too low, this will systematically affect the value of the parallax, since the Moon is always South at Greenwich and North at the Cape." All such tendency would be completely eliminated by the use of an eye-piece fitted with a reversing prism; but Mr Crommelin thinks the use of such a prism would render the identification of the crater difficult, because "it is by no means too easy to rapidly identify the crater under existing conditions, and it would be considerably harder if the familiar configurations were reversed."*

Thus the probable error of the Lunar parallax, as computed with two not very improbable values of the Earth's ellipticity, differs by more than six times the probable error of the direct determination by observation.

In other words, the instrumental determination of the Lunar parallax affords a practical, simple, and direct method of determining the form of the Earth, provided—

(1) That the constant of the Moon's parallax is determined by observations made by the diurnal method at a number of single observatories† in different parts of the world.

(2) Or is determined by a sufficient number of pairs of meridian circles situated in different latitudes nearly in the same meridian.

(3) Or by comparing the absolute value of the constant of the Lunar parallax (as determined by observations of type (1) or (2)) with its theoretical value based on other data.

With our present knowledge of the data by which the theoretical parallax of the Moon is derived, it becomes possible, as is shown in the paper in question, to determine the ellipticity of the Earth on any meridian by comparing the constant of the Lunar parallax derived from transit circle observations of the Moon's Declinations at two or more widely separated observatories on or near that meridian with the same constant derived from theory.

If p_0 is the Moon's mean horizontal parallax.

μ is the ratio of the Mass of the Moon to that of the Earth.

n is the Moon's mean motion.

n_1 is the Earth's mean orbital motion.

a is the Earth's equatorial radius.

a_1 is the radius of the Earth in latitude whose sine $= \frac{1}{\sqrt{3}}$.

g_1 is the gravitational attraction in the above latitude.

Then the theoretical value of the Moon's mean horizontal parallax is given by the equation

$$\frac{a_1^3}{a^3} \sin {}^3p_0 = \frac{1}{1+\mu} \frac{n^2 a_1}{g_1} \left(1 + \frac{n_1^2}{2n^2}\right) \quad . \quad . \quad . \quad . \quad . \quad . \quad (C)$$

The factor $1 + \frac{n_1^2}{2n^2}$ represents a small correction due to the disturbing effect of the Sun on the Moon's mean motion.

g_1 depends upon the determinations of the length of the seconds pendulum, which are referred to the latitude whose sine is $\frac{1}{\sqrt{3}}$.‡

a_1 is determined by geodetic operations which, on the whole, determine the radius of the Earth at the latitude whose sine is $\frac{1}{\sqrt{3}}$ with high precision.

μ has been determined with high precision from observations of the minor planets (see p. lxxx). Now, if e is the ellipticity of the Earth, we have (neglecting e^2)

$$\frac{a^3}{a_1^3} = 1 + e.$$

* It seems to the writer that the identification of the crater could be always made in one position of the reversing prism with which the observer is familiar. After identification, the crater could be bisected by the horizontal web, the prism be then rotated 90° and another bisection made; the first bisection would ensure identification. As twelve different observers took part in the observations at each observatory it seems probable that personality will be largely eliminated from the mean result. At the same time, if the series should be repeated, it would be well to introduce the use of the reversing prism to guard against a possible common tendency in all observers such as that above indicated.

† Method (1) was suggested by Gill in 1877 (*The Observatory*, vol. i. p. 75). There seems to be little doubt, with our present knowledge of the Moon's physical libration, that at an equatorial station it would be possible in course of six months to determine the constant of the horizontal parallax of the Moon with a probable error of $\pm 0''{\cdot}05$. Perhaps the best method would be to determine the diurnal parallax of Mösting A by observing vertical transits of the crater and neighbouring stars with a powerful zenith telescope. In this way the ellipticity of the equator, if it exists, could be determined (from such a series of observations at each of three or more equatorial stations) with very considerable accuracy.

‡ In the latitude whose sine is $\frac{1}{\sqrt{3}}$, the earth attracts as if its mass was concentrated at its centre.

Digitized by Google

To examine the effect on p_0 of small changes in the adopted data, differentiate equation C and insert numerical values in the coefficients, and we obtain :—

$$\Delta p_0 = +0{\cdot}18\Delta a_1 - 0{\cdot}013\Delta\left(\frac{1}{e}\right) - 1{\cdot}2\Delta g_1 + 0{\cdot}17\Delta\left(\frac{1}{\mu}\right) \quad . \quad . \quad . \quad . \quad . \quad (D)$$

Newcomb (" Astronomical Constants," p. 194) gives a correction to Hansen's mean parallax $= +0''{\cdot}45$, based on the following data :—

Newcomb's data.	*More recent values.**
$a_1 = 6371{\cdot}004$ km.	6370·843 (Helmert's latest results).
$g_1 = 979{\cdot}77$ in C.G.S. units.	979·76 (Helmert from pendulum observations 1901).
$\frac{1}{\mu} = 81{\cdot}45$.	81·53 (Hinks, *Monthly Notices*, p. lxx).
$\frac{1}{e} = 293{\cdot}5$.	

The substitution of the more recent values of a_1, g_1 and $\frac{1}{\mu}$ makes no change in Newcomb's original value, viz. $\Delta p_0 = +0''{\cdot}45$, as the small corrections cancel each other.

Thus by the theory of gravitation, assuming that a_1, g_1 and μ are accurately determined, the value of the correction to Hansen's value of the mean lunar parallax is

$$\Delta p_0 = +0''{\cdot}45 - 0{\cdot}013\Delta\left(\frac{1}{e}\right) \quad . \quad . \quad . \quad . \quad . \quad . \quad . \quad (E)$$

and the result from the Meridian observations of Mösting A at Greenwich and the Cape, computed with the value $\frac{1}{e} = 293{\cdot}5$, gives :—

$$\Delta p_0 = +0''{\cdot}48 - 0{\cdot}057\Delta\left(\frac{1}{e}\right) \quad . \quad . \quad . \quad . \quad . \quad . \quad . \quad (F)$$

Solving the equations (E) and (F), we get

$$\frac{1}{e} = 294{\cdot}2$$

$$\Delta p_0 = +0''{\cdot}44.$$

This value of $\frac{1}{e} = 294{\cdot}2$ differs from that derived by Hayford, viz. 297·0, with the mean error $\pm 1{\cdot}2$ (Helmert) and from Helmert's value 297·3, and it is not impossible that the difference may be due to a small personality common to most observers, and which would be eliminated by use of the reversing prism.

* With reference to the figures employed in Dr Crommelin's paper, Dr Helmert writes under date 1912 November 4 :—

"The figure quoted (6370843m) as Helmert's value of the radius vector for the latitude whose sine is $= \frac{1}{\sqrt{3}}$ has probably been calculated from $a = 6378000$, $\alpha = 1 : 298{\cdot}3$, as these were the figures which I supplied to Newcomb some time ago. The latitude is geocentric, and I find the somewhat different result, viz. 6370849, and that is the value which at the present moment I consider to be the best.

"We may take in round figures $a = 6378400$.

"Hayford has recently derived $a = 6378388$ with the *mean error* ± 53
$\alpha = 1 : 297{\cdot}0$ with the *mean error* $\pm 1{\cdot}2$. } Mean errors were computed by myself; Hayford's mean errors are rather smaller.

"As to gravity in geocentric latitude arc sin $= \frac{1}{\sqrt{3}}$, the figure 979·76 is derived from my formula of 1901, viz. :—

$$978{\cdot}046 \text{ cm. } (1 + 0{\cdot}005302 \sin^2\phi - 0{\cdot}000007 \sin^2 2\phi),$$

corrected later by $-0{\cdot}016$ cm. as the result of a new absolute determination of gravity.

"The mean error of 979·76 is less than $\pm 0{\cdot}01$ cm. The figure 979·76 is not exact; I find 979·768."

Digitized by Google

OCCULTATIONS OF STARS AND PLANETS.

Soon after Gill's appointment to the Cape in 1879 he received a letter from Professor Simon Newcomb stating that he was engaged on the completion of a new Lunar Theory, and, for the more accurate determination of the constants of his theory, he was anxious to obtain a series of observations of occultations of stars by the Moon at an observatory in the Southern Hemisphere.

Gill, in reply, undertook to make such observations regularly, and, on examining the records of the Observatory, he further found a large number of unpublished observations of occultations which had been made under the direction of Sir Thomas Maclear. These he further undertook to reduce on a uniform system and publish with the least possible delay.

To give full value to these and all future observations which involve an accurate knowledge of Greenwich time it was essential that the longitude of the Observatory should be accurately determined.

The longitude of Aden had been determined by telegraph in connection with the expedition of Lord Lindsay (now the Earl of Crawford) to Mauritius in 1874*; it therefore only remained to arrange for the telegraphic connection of the longitudes of Aden and the Cape.

On 1879 October 6, Gill wrote to Sir George Airy pointing out that before the end of the year the Cape would probably be in telegraphic connection with England, and raised the question as to whether immediate advantage should not be taken to determine the longitude of the Observatory as soon as possible. Sir George Airy replied (1879 November 13): "To mention the galvanic determination of the longitude of the Cape of Good Hope Observatory is quite enough; the thing must be done as soon as may be."

On 1879 December 28, the first cable message from England was received at the Cape, and on the following day Gill wrote to Sir George Airy, begging him to request from Sir James Anderson the use of the cable and permission to make the necessary preliminary experiments. On 1880 September 20, Sir George Airy replied: "Sir James Anderson will be very pleased to do everything possible with the cable, Durban-Aden, and to join up, as desired, at the intermediate stations."

After much preliminary correspondence and experiment a precise programme and detailed estimates of cost were submitted to the Admiralty.

The requisite instruments finally reached the Cape on 1881 March 1, and the work was at once begun. Full details of the operation are given in the *Cape Annals*, vol. i., part 2.†

The first series of observations of occultations was published in vol. i., part 4, of the *Annals of the Cape Observatory*, and contains *512* occultations observed between 1834 March 20 and 1880 December 12.

Further series were subsequently published as follows in the *Cape Annals*, viz.:—

Vol. ii., part 3—*441* occultations observed between 1881 February 3 and 1895 November 5.

Vol. ii., part 6—*993* occultations observed between 1896 January 7 and 1906 December 28.

In all, *1946* observed occultations.

The resulting equations are given for each observation and include symbolic expressions for errors in the assumed tabular places of the Moon and star; in the time of observation; the longitude of the instrument; the geocentric latitude; Moon's parallax and Moon's semidiameter.

The comparisons are made throughout with Hansen's Tables of the Moon.

The assumed longitude of the Transit Circle is

$$-1^h\ 13^m\ 55^s.$$

The most probable value of the true longitude is

$$-1^h\ 13^m\ 54^s{\cdot}63$$ (see page xxxv),

the correction Δl applicable to all the published equations should therefore be $+0^s{\cdot}37$, of which the probable error is about $\pm 0^s{\cdot}03$.

The astronomical latitude of the Transit Circle has been assumed to be uniformly

$$-33^\circ\ 56'\ 3''{\cdot}4.$$

* A detailed account of that determination is given in the *Dunecht Publications*, vol. iii.

† For the results of these operations and their comparison with a subsequent direct determination *via* Greenwich-Ascension Island and Ascension Island—Cape of Good Hope, see page xxxv of the present work. The discordance between the two results is only 0·07 seconds of time; this close agreement, considering the numerous links involved in the earlier determination, points to the general systematic accuracy of both determinations.

Digitized by Google

The corresponding values of ϕ, log. ρ, and the assumed values of the Earth's compression (e) are

$$\phi' = -33^\circ \quad 45' \quad 26''\cdot26$$
$$\text{Log. } \rho = 9\cdot9995512$$
$$e = \frac{1}{300}\ ^*.$$

If necessary, small corrections, depending on errors in the adopted mean geographical latitude, on change of that latitude or on the change of geocentric latitude due to the adoption of other elements of the Earth, can thus be readily computed, as the co-efficient of $\Delta\phi$ is given for each observation.

No corrections have been applied in the equations for the difference in latitude, longitude, and height above sea level of the various observing instruments, but these can readily be taken into account from the data supplied in the Introductions to the published results.

OBSERVATIONS OF THE SUN, MOON, AND PLANETS.

At the request of Professor Simon Newcomb, a series of Meridian Observations of the Sun, Mercury, and Venus was made in the years 1884–1892 with the non-reversible Transit Instrument. These observations were at first forwarded in manuscript to Professor Newcomb, and the results were utilised by him in his "Astronomical Constants." The observations have since been published and discussed in the *Annals of the Cape Observatory*, vol. ii., part 5. Having regard to the pressure of other work, it was resolved in 1892 to defer further daily observations of the Sun and Minor Planets until a reversible Transit Circle could be erected and brought into systematic work, and accordingly operations have now been resumed with the new Transit Circle.

For the observation of Major Planets, however, experience in the observations of Mars at Ascension in 1877 and the subsequent observations of Minor Planets appeared to show that Heliometer observations afforded the most accurate method of referring the position of a planet to neighbouring stars. On these grounds it seemed desirable to institute regular observations of the Major Planets as part of the observing programme with the Cape Heliometer, and accordingly since the year 1897 each of the Major Planets have been regularly observed, with the exception of Uranus in 1901, at which time the instrument was undergoing repair.

These observations from 1897 to 1904 are given and discussed in the *Annals of the Cape Observatory*, vol. viii., part 1. The series of observations is continued to the present day.

THE INTERNATIONAL ASTROPHOTOGRAPHIC CHART AND CATALOGUE.

This work, in a certain sense, had its origin in some correspondence which took place between Gill and Admiral Mouchez, beginning in December 1882 (see p. xlix). This correspondence was resumed in 1886, when Admiral Mouchez forwarded some photographs taken at Paris with the new astrographic telescope, which, at his instigation and with his support, the brothers Henry had evolved and constructed. Gill then wrote to Admiral Mouchez, congratulating him and the brothers Henry on the very successful results attained, and suggested that the time had now arrived when steps should be taken to make a systematic international effort to apply like instruments and methods to the complete mapping of the sky. Admiral Mouchez concurred, and Gill then suggested that an International Congress, meeting at Paris, seemed to offer the only practical way of arriving at joint action. A circular letter was then addressed to the chief astronomers and scientific societies—to which the response was so unanimous and so cordial that Admiral Mouchez was enabled to issue invitations to astronomers, in the name of the Bureau des Longitudes, to attend a Congress to be held at Paris in April 1887.

Shortly before the Congress assembled, Gill wrote to Admiral Mouchez and to some of the leading astronomers suggesting that the original programme of the Congress should be extended to include a catalogue as well as maps of the whole sky. This proposal was finally agreed to by the Congress, and it was resolved to chart the whole sky in duplicate, with sufficient exposure to include all stars to the 14th magnitude, and to take an independent series of catalogue plates, of shorter exposure, to include all stars of the 11th magnitude. The plates both of the chart and catalogue series were arranged to overlap each other in such a way that every star ought to appear on at least two plates of each series. The co-ordinates of all the stars on the catalogue plates were to be measured, so as to enable a catalogue of precision of all stars to the 11th magnitude to be ultimately prepared when definitive places of the comparison stars had been determined. The fact that such an International Congress was successfully convened and its deliberations brought to such important unanimous conclusions was due chiefly to the enthusiasm, tact, and genial personality of

* This value of the ellipticity of the Earth was adopted for sake of uniformity with that in use at Greenwich.

Digitized by Google

Admiral Mouchez, then Director of the Paris Observatory. To him and to his successors, Lœwy, Tisserand, and Baillaud, coupled with the liberal support of the Government of the French Republic, of the Institute of France, and of the Bureau des Longitudes, the successful progress of the work is largely due; for, strongly as the project has appealed to all astronomers, and enthusiastically as the co-operating observatories have worked, the common interest and rate of progress could not have been maintained without the central organisation which has always found at Paris a common place of meeting and a warm and sympathetic welcome.

The zone assigned to the Cape was that contained between declination $-40°$ and $-52°$, and involved 1632 areas, each $2° \times 2°$.

The design of the mounting of the astrographic telescope had been fully discussed with Sir Howard Grubb, so that the order for its construction could be given so soon as sanction of H.M. Treasury was obtained. The mounting of the instrument reached the Cape on 1891 June 12, and its erection was completed on June 21. The object-glasses, reseaux, and dark slides arrived on August 9, and observations for focus, etc., were begun the same night. Unfortunately, it turned out on trial that the definition of the object-glass was not satisfactory, and no astrographic images of good quality could be obtained. Gill visited Europe in February 1902 to attend the *réunion* of the Permanent Committee of the Astrographic Congress of that year, and took advantage of the opportunity to return the object-glass to Sir Howard Grubb for correction of its imperfect definition. The eye-end of the guiding telescope and the breech-piece carrying the photographic slide were at the same time returned for alterations which experience showed to be desirable.

Sir Howard found a serious error in the figure of the outer surface of the crown lens, which he is certain did not exist when he applied his final tests, and he attributed the fault to intentional damage done by an evil-minded employee. The defective surface was refigured by Sir Howard Grubb, and, thanks to the kindness of Professor Pritchard, was tested at Oxford by Mr Plummer, under his supervision. It was thus not until 1892 July 26 (see p. xliii) that regular work on the lines of the resolutions of the Astrographic Congress could be begun.

From this date the photographic part of the work was regularly continued, and by the end of 1896 all the catalogue plates had been taken; but investigation under the measuring machine led to some repetitions. Preliminary measures of 27 plates showed that the existing methods of measurement were too slow and laborious, and plans were made of a machine capable of more rapid but equally accurate work.

It was at the same time resolved to make a second series of catalogue plates, in order to bring the epoch of photographic observation nearer to 1900, and to utilise the earlier series of plates, when necessary, for the investigation of proper motion.

The new measuring apparatus, designed by Gill and made by Repsold of Hamburg, reached the Cape about the end of 1897, and, after some small alterations, measurement of the catalogue plates was systematically begun in August 1898. The apparatus is described by Gill (*Monthly Notices R.A.S.*, lix. pp. 61–72), and it was found to work so perfectly that a second instrument of the same kind was ordered from Messrs Repsold and was received in the end of 1899. The work was now fully organised, a proper room for measurement and storage of the plates had been built, and a staff of five ladies was trained to the work. Since that time the work has been steadily carried on, and, in his Report for the year 1910, Mr Hough, H.M. Astronomer at the Cape, states that "the outstanding measures of the new series of catalogue plates have been completed during the year; and 363 plates of the old series have been measured with a view to the determination of the proper motions of the standard stars. As a final control of the work a comparison is now being made between the results derived from the common regions of pairs of plates which overlap. To facilitate such a comparison, a preliminary application of the plate-constant corrections is necessary, and it has now been decided to defer publication in order that the printed results may include the corrections thus applied.* During the year these corrections have been computed for 424 plates and applied to the measures for 355 plates. Subject to final revision from comparisons of overlapping areas, the measures from 512 plates have now been completely compared for press, and the discordances have been examined for 268 quadrants common to a pair of plates. For the extreme northern zone of the Cape series a similar comparison has been rendered possible by the courtesy of Professor Dyson, who has furnished a manuscript copy of the measures made at Edinburgh from the plates taken at Perth, Western Australia."

There can be no doubt that, with these precautions, a rigorous elimination of errors will result, and that the Cape share of the work will be in the highest degree satisfactory. The chart plates are also completed, but no steps, as yet, have been taken for their reproduction. They are, however, stored in perfect order for reference—and probably that is all that is necessary for immediate practical purposes, although for general distribution it is desirable that means should be provided for their reproduction.

* The work of printing was begun in 1912.

Digitized by Google

INVESTIGATIONS ON THE POSITIONS OF CLOSE CIRCUMPOLAR STARS.

Since the pole is the origin of reference to which all fundamental determinations of stellar position are referred, and as these determinations are usually made by means of indirect observations on stars adjacent to the pole, it becomes an important matter to determine the position of the latter class of stars with the highest possible precision.

Having regard to the precision that had been attained in the heliometer triangulation of the Victoria comparison stars, it appeared to Gill that, if the relative co-ordinates of all the stars within about 2° of the pole were rigorously determined by a similar system of triangulation, the position of the pole relative to the same system of co-ordinates could then be independently determined both from meridian observations of R.A. and from those of declination. The coincidence or otherwise of these two independent results for the co-ordinates of the pole would afford a crucial test of the systematic accuracy of the work, and a combination of the heliometer measures with those of the meridian observations would greatly diminish the accidental errors of the final results.

For the original programme, 16 stars, all brighter than 8·5 magnitude, were included as of primary importance; to these were added 5 secondary stars, between magnitudes 8·5 and 9·3, which were required to give high geometrical rigidity to the figure.

The programme of observation consisted in the measurement of every pair of stars whose mutual distance was within 7250″—which is the limit of range of the Cape heliometer. Of such pairs 121 were available. Pairs involving one or other of the secondary stars were observed three times each—whereas the remaining pairs, which involved two of the principal stars of the triangulation, were observed each six times.

The observations were principally made by Messrs Goodman and Lowinger, but a considerable number of observations were also made by Dr de Sitter.

The variation of the instantaneous scale value of the heliometer was determined by observations of the standard pair of stars (τ Octantis and σ Octantis). In general the practice was to commence and finish the night's work with an observation of the standard pair, and to interpolate an observation of the standards after measurement of every three or four pairs in the triangulation. The observations were made between 1897 September 30 and 1900 March 5.

Soon after Mr S. S. Hough joined the staff of the Observatory, in October 1898, the reduction and discussion of this series of observations was placed in his hands, and was taken up by him with much zeal and thoroughness.

Preliminary weights were assigned to different classes of observations by each of the different observers, derived from the inter-agreement of their observations of the same pairs—that is to say, the probable error of observation for each observer was determined for pairs of different distances and for different magnitudes. In the latter case the classifying magnitude was that of the fainter star, because the image of the brighter star is screened down to approximate equality with that of the fainter star. An *a posteriori* discussion of the weights indicated that the relative weights assigned to the different observers were substantially correct.

A comparison was then made between the measures of different distances by the different observers, in order to reduce the results to a uniform system, viz., that of Lowinger's observations.

To reduce, for example, Goodman's observations to Lowinger's system, equations of condition were formed from each pair of stars observed of the form

$$x + y\sigma + z\sigma^2 = \mathrm{L} - g,$$

where L and g denote respectively the measures of distance made by the observers Lowinger and Goodman;

$$\sigma = \frac{s - 4000}{1000}$$

where s is the distance expressed in seconds of arc.

The weights assigned to $\mathrm{L} - g$ in each equation were

$$= \frac{p_{\mathrm{L}}\, p_{\mathrm{G}}}{p_{\mathrm{L}} \times p_{\mathrm{G}}}$$

A similar comparison was made for De Sitter's observations—*i.e.* for L − S, with the following results:—

Digitized by Google

Distance.	L – *g*.		L – S.	
"	"	"	"	"
1000	– 0·085	± 0·070	+ 0·037	± 0·104
2000	– 0·077	± 0·039	+ 0·039	± 0·057
3000	– 0·059	± 0·028	+ 0·032	± 0·069
4000	– 0·033	± 0·028	+ 0·016	± 0·071
5000	– 0·003	± 0·027	– 0·008	± 0·062
6000	+ 0·046	± 0·028	– 0·041	± 0·079
7000	+ 0·099	± 0·051	– 0·084	± 0·153

(The comparatively large probable errors of the values L—S are due to the fact that De Sitter's observations are confined to 10 pairs of stars.)

The above corrections were then applied to the observations of Goodman and De Sitter, and, having regard to the weights, definitive observed distances on the system of Lowinger's method of observing were derived.

These distances were then compared with the distances computed from meridian observations, using only such pairs as depend on well-determined meridian places, and weighting the equations in accordance with the precision (*a*) of the heliometer observations, (*b*) of the meridian observations; there resulted values of x, y, and z, with their probable errors, viz. :—

$$x = -0''{\cdot}0515 \pm 0''{\cdot}044\,;\quad y = +0''{\cdot}0421 \pm 0''{\cdot}020\,;\quad z = +0''{\cdot}0285 \pm 0''{\cdot}011,$$

or, when expressed in tabular form, the following comparison between the heliometer (system Lowinger) and the meridian observations.

Distance.	Difference H – M = L – M.	Probable error.	Whence *g* – M.	Whence S – M.
"	"	"	"	"
1000	+ 0·079	± 0·119	+ 0·164	+ 0·042
2000	– 0·021	± 0·064	+ 0·056	– 0·060
3000	– 0·065	± 0·043	– 0·006	– 0·097
4000	– 0·051	± 0·044	– 0·018	– 0·067
5000	+ 0·019	± 0·041	+ 0·022	+ 0·027
6000	+ 0·147	± 0·040	+ 0·101	+ 0·188
7000	+ 0·331	± 0·070	+ 0·232	+ 0·415

The curious result of this comparison is that all the observers exhibit a tendency to observe the smaller distances too large, whereas previous experience and theoretical considerations show that the opposite should be the case, although the probable errors of H – M in the above table hardly render this conclusion a certainty.

But in the heliometer triangulation the long and short distances are so intermingled, that, if all the measured distances are included in the discussion, the conditions requisite for geometrical consistency of the figure are capable of giving a very strong determination of any systematic errors in the heliometer observations which depend on relative distances.

Mr Hough, therefore, undertook the investigation of these errors, independently either of the meridian observations or of any other external evidence.

This investigation gave the following results, viz. :—

Distance.	L – M.		*g* – M.		S – M.	
"	"	"	"	"	"	"
1000	+ 0·115	± 0·033	+ 0·159	± 0·065	+ 0·023	± 0·022
2000	+ 0·017	± 0·018	+ 0·064	± 0·036	– 0·049	± 0·015
3000	– 0·038	± 0·013	+ 0·002	± 0·021	– 0·073	± 0·018
4000	– 0·047	± 0·013	– 0·026	± 0·017	– 0·050	± 0·018
5000	– 0·012	± 0·012	– 0·020	± 0·017	+ 0·021	± 0·016
6000	+ 0·069	± 0·013	+ 0·019	± 0·025	+ 0·139	± 0·019
7000	+ 0·192	± 0·021	+ 0·093	± 0·035	+ 0·305	± 0·025

Having regard to the probable errors of these quantities, it appears probable that, for some reason—personal

Digitized by Google

or instrumental—the observers measured short distances too large—a result exactly opposed to all previous experience with the same instrument.*

The corresponding corrections were then applied to the original observations of each observer, and the resulting distances were combined, having regard to their respective weights. The distances, O′, so formed were then compared with the values of C′, derived from the preliminary solution, and new absolute terms, O′ − C′, were formed for the original equations and normals. These were then solved by successive approximation for y and z and for $\Delta\alpha_A$, $\Delta\delta_A$, $\Delta\alpha_B$, $\Delta\delta_B$, . . . etc., for each of the 21 stars A, B, . . . etc., and so very approximate values of α_A, δ_A, α_B, δ_B, . . . etc., were determined with their weights.

The substitution of the values of the unknowns showed the various distances in the triangulation to be represented in the mean as follows :—

Distances.	No. of Pairs.	Mean Residual.
Below 2000″	7	+ 0″·009
2000 – 3000	16	+ ·002
3000 – 4000	14	− ·080
4000 – 5000	20	+ ·018
5000 – 6000	23	+ ·028
6000 – 7000	27	− ·023
7000 – 7300	11	+ ·012

The representation of the observations of different distances is now quite satisfactory, except perhaps in the case of the distances 3000″ to 4000″—a discordance, however, which seems to arise solely from accidental causes—for it certainly cannot be attributed to faulty determination of the division errors of the heliometer scales—a hypothesis which the results of the observations of Victoria show to be untenable.

With regard to the origin of the discordance between the form of the corrections depending upon distance from those found in the case of the Victoria observations and those which result from the present research, it is very difficult to arrive at any sound conclusion.

In the Victoria observations it was shown, both from theory and experience, that the only necessary correction to the observed distances, apart from a uniform correction for error of scale value, was

$$\delta s = s \sin^2 \tfrac{1}{2}\psi = \frac{\kappa^2}{2s}.$$

Reference to p. lxxxviii will explain this, and the table on p. lxxxix shows that, when the distances are not smaller than 1000″, the corresponding corrections will be probably insensible.

Thus, as the smallest distance in the circumpolar triangulation is 917″, there is no opportunity to determine the existence or otherwise of a term depending on the reciprocal of the distance. The origin of the term depending

* The reader's attention may be here directed to a misunderstanding in Mr Cookson's work on the *Determination of the Mass of Jupiter*. The quotation in question is given at p. xc of the present work. Mr Hough found (in the triangulation of the circumpolar area) that a self-consistent figure could be built up only by assuming that the directly computed instrumental distances required a correction which could be analytically expressed by the formula

$$x + ys + zs^2.$$

"Mr Hough found that when the distance s was expressed in terms of 1000″ as unit, the coefficient z had the following values :—

Lowinger +0·0224
Goodman +0·0169 } mean 0·0210."
De Sitter +0·0238

Mr Cookson adds: "If my observations are affected by a similar error, the measured distance of the satellites would require a correction of 0″·005, whilst those of the standards for 1901 would require a correction of as much as 0″·911. If this error existed unknown to the observer, the effect would be the same as that of adopting a distance of standards which was in error by 0″·911—*i.e.* by nine times the limit arrived at." Mr Cookson's misunderstanding arises from his omission to observe that if s represents the number of thousands of seconds of arc from zero, the actual expression used in deriving the value of z was

$$x + y\,(s - 4000) + z\,(s - 4000)^2,$$

or, in the original notation,

$$x + y\sigma + z\sigma^2,$$

where

$$\sigma = s - 4000\,;$$

whence the "standards for 1901" ($s = 6591$″) would require a correction of 0″·143 and *not* of 0″·911.

Digitized by Google

on σ^2, if it be a reality, is as yet unexplained. The fact remains that the observations of the triangulation as a self-consistent figure are now well represented; and, as the co-ordinates of each star are defined by measures of a great variety of distances, the outstanding systematic errors of these co-ordinates must be practically insensible. The probable errors of the resulting co-ordinates of the stars range from $\pm 0''\cdot 03$ to $\pm 0''\cdot 05$.

The values of α and δ derived from the solution of normal equations which depend on heliometer observations only, define a figure with reference to an arbitrarily chosen pole and zero of R.A., and require corrections derived from comparison with meridian observations :—

$$\text{in R.A.} = \frac{1}{15}(\xi \cos \alpha \tan \delta + \eta \sin \alpha \tan \delta) + c$$
$$\text{in Dec.} = -\xi \sin \alpha + \eta \cos \alpha + 100\, s \cos \delta,$$

where ξ and η are two constants serving to define the position of the true pole in the figure; c a constant correction to all R.A.'s to reduce to the true zero of R.A., and s a constant depending on the scale of the figure.

For the purpose of this comparison two series of meridian observations were employed :—

I. The places given in CAPE CATALOGUE 1890, Appendix III., depending on a discussion of all material previously available. To the stars of the triangulation contained in this list, four stars, D, N, Q, R, were added after a similar discussion.

II. A valuable series of meridian observations made at Melbourne during the years 1884–92, communicated by Mr Baracchi. These have been reduced to the epoch and equinox 1900 with the aid of the same precessions and proper motions as were used in the former series.

Only the places of the 12 undermentioned stars in the triangulation which are common to both catalogues were employed in the comparisons.

The following are the resulting equations of condition.

C and M represent the Cape and Melbourne meridian results respectively, and H the results from the heliometer observations :—

FROM RIGHT ASCENSIONS.

Star.	C—H.	M—H.	p_C.	p_M.	v_C.	v_M.
		s			s	s
C = o Octantis	$-3\cdot53\xi - 0\cdot19\eta + c = +0\cdot62$	$= +2\cdot01$	1	1	$-0\cdot17$	$-0\cdot39$
D = Lac. 1884	$-2\cdot56 - 2\cdot02 = +0\cdot48$	$= +1\cdot59$	$\frac{1}{4}$	1	$-0\cdot05$	$+0\cdot01$
B = Lac. 1848	$-1\cdot86 - 1\cdot93 = +0\cdot36$	$= +1\cdot38$	$\frac{1}{6}$	1	$-0\cdot01$	$+0\cdot02$
L = A Octantis	$+1\cdot27 - 2\cdot36 = -0\cdot08$	$= +0\cdot33$	1	1	$+0\cdot13$	$+0\cdot28$
R = Cape (1880) 6404	$+2\cdot90 - 0\cdot46 = +0\cdot32$	$= +0\cdot14$	$\frac{1}{4}$	1	$-0\cdot53$	$-0\cdot20$
N = Lac. 5235	$+5\cdot01 + 0\cdot91 = -0\cdot04$	$= -0\cdot44$	$\frac{1}{4}$	$\frac{1}{2}$	$-0\cdot45$	$-0\cdot36$
Q = Brisbane 4614	$+2\cdot95 + 1\cdot95 = -1\cdot12$	$= -0\cdot99$	0	$\frac{1}{2}$	$+0\cdot80$	$+0\cdot61$
S = z Octantis	$+1\cdot30 + 1\cdot08 = -0\cdot33$	$= +0\cdot05$	2	4	$+0\cdot22$	$+0\cdot13$
I = χ Octantis	$+0\cdot03 + 1\cdot63 = +0\cdot27$	$= +0\cdot61$	1	1	$-0\cdot27$	$-0\cdot15$
H = σ Octantis	$-1\cdot32 + 4\cdot95 = -0\cdot71$	$= +0\cdot71$	$\frac{1}{5}$	$\frac{1}{2}$	$+0\cdot70$	$-0\cdot31$
E = B Octantis	$-4\cdot55 + 3\cdot26 = -1\cdot24$	$= +0\cdot89$	$\frac{1}{3}$	$\frac{1}{2}$	$+1\cdot65$	$+0\cdot59$
A = τ Octantis	$+1\cdot91 + 0\cdot39 = +0\cdot82$	$= +1\cdot48$	1	1	$-0\cdot56$	$-0\cdot35$

FROM DECLINATIONS.

C = o Octantis	$-0\cdot054\xi + \cdot998\eta + 1\cdot89s = +0''\cdot19$	$= -0''\cdot03$	3	4	$-0''\cdot31$	$-0''\cdot15$
D = Lac. 1884	$-\cdot619 + \cdot785 + 2\cdot04 = +0\cdot19$	$= +0\cdot07$	1	2	$-0\cdot25$	$-0\cdot07$
B = Lac. 1848	$-\cdot719 + \cdot695 + 2\cdot49 = +0\cdot09$	$= -0\cdot21$	2	3	$-0\cdot15$	$+0\cdot23$
L = A Octantis	$-\cdot881 - \cdot474 + 2\cdot49 = -0\cdot09$	$= +0\cdot12$	2	3	$+0\cdot10$	$+0\cdot09$
R = Cape (1880), 6404	$-\cdot157 - \cdot987 + 2\cdot28 = -0\cdot12$	$= -0\cdot07$	2	2	$+0\cdot08$	$+0\cdot15$
N = Lac. 5235	$-\cdot178 - \cdot984 + 1\cdot31 = -0\cdot21$	$= +0\cdot02$	1	2	$+0\cdot10$	$+0\cdot01$
Q = Brisbane 4614	$+\cdot552 - \cdot834 + 1\cdot88 = -0\cdot27$	$= +0\cdot06$	$\frac{1}{2}$	2	$+0\cdot17$	$-0\cdot17$
S = z Octantis	$+\cdot640 - \cdot769 + 3\cdot94 = -0\cdot33$	$= -0\cdot23$	1	1	$+0\cdot13$	$+0\cdot01$
I = χ Octantis	$+1\cdot000 - \cdot017 + 4\cdot08 = -0\cdot44$	$= -0\cdot28$	2	3	$+0\cdot17$	$-0\cdot13$
H = σ Octantis	$+\cdot966 + \cdot258 + 1\cdot30 = -0\cdot15$	$= -0\cdot38$	3	4	$-0\cdot02$	$+0\cdot04$
E = B Octantis	$+\cdot582 + \cdot813 + 1\cdot19 = +0\cdot07$	$= -0\cdot20$	1	3	$-0\cdot22$	$-0\cdot10$
A = τ Octantis	$+\cdot203 + \cdot979 + 2\cdot03 = -0\cdot17$	$= -0\cdot37$	2	3	$+0\cdot02$	$+0\cdot12$

Digitized by Google

The solution of these equations by least squares gave the following values of the unknowns :—

	From Cape observations.			From Melbourne observations.		
	R.A.	Dec.	R.A. and Dec. simultaneously.	R.A.	Dec.	R.A. and Dec. simultaneously.
ξ	− 0·077	− 0·252	− 0·103	− 0·286	− 0·0180	− 0·269
η	− 0·144	+ 0·137	− 0·044	− 0·128	− 0·109	− 0·124
c	+ 0·127	...	+ 0·076	+ 0·665	...	+ 0·661
s	...	− 0·0409	− 0·0418	...	− 0·0420	− 0·0361

The residuals v_C v_M are derived by substituting the results of the *simultaneous* solutions in the equations of condition corresponding respectively with the Cape series and the Melbourne series.

They are given in the sense heliometer *minus* meridian.

It will be seen that the discordances between the values as derived from right ascensions alone and as derived from declinations alone are most marked in the Cape series.

Mr Hough proposes to undertake a rigorous discussion of the systematic errors which affect the various catalogues of southern circumpolar stars, and defers the final combination of the heliometer results with those of the meridian catalogues until this work has been completed.

The proposed discussion will include the places of circumpolar stars as now being determined with the new reversible transit circle at the Cape.

The preliminarily adopted places of 22 circumpolar stars, together with a complete account of the work, are published in the *Annals of the Cape Observatory*, vol. xi. part 1.

It was now obviously desirable to complete a catalogue of the Southern Circumpolar area on the same plan as that of the rest of the Astrographic Catalogue, employing as "standards" the 22 close circumpolar stars whose positions were determined in the manner above described.

Accordingly, the following plates were taken consecutively on one night; three exposures, of 6 minutes, 3 minutes, and 20 seconds duration, were made on each plate, the instrument being moved through an arc of 1′ in declination between the different exposures on the same plate. The plates were arranged as follows :—

Date.	Rotation Number of Plates.	Co-ordinates of Centre.		Middle Sidereal Time of 6 Minutes Exposure.
		hrs.	°	h m s
1899 Sept. 25	5542	21	−89	20 3 50
	3	21	−91	20 21 55
	4	0	−91	20 40 40
	5	0	−89	20 57 10
	6	South Pole		21 15 20
	7	6	−89	21 44 10
	8	6	−91	22 8 20
	9	3	−91	22 29 40
	5550	3	−89	22 47 55

These plates were measured, for the 6 minutes exposures, by Mr Hough and Miss Bowman (head of the measuring department) during Gill's absence in England in the year 1900, in precisely the same manner as the ordinary catalogue plates, with the object of determining, from a discussion of the results of overlapping plates, the probable accuracy of the derived co-ordinates in the Astrographic Catalogue. On Gill's return he pointed out to Mr Hough the additional value of such a series of plates for the investigation of such questions as the distortion of the photographic objective and other possible sources of error; these investigations were accordingly taken up by Mr Hough, and are fully described by him in the *Annals of the Cape Observatory*, vol. ix. part 2. His discussion shows that the plates are practically free from lateral distortion, but that a small but sensible radial distortion exists, which he takes into account and applies in the derivation of the final co-ordinates. The probable error of a star's co-ordinates from a single plate, including errors of measurement, errors of the *réseau*, and any outstanding source of systematic error which does not affect the images on all plates in common, is found to be $\pm 0''{\cdot}17$.

Mr Hough gives a final catalogue of the Rectangular Co-ordinates, X and Y, of 917 stars, mostly within 2° of

Digitized by Google

the South Pole, from which the right ascensions and declinations for the epoch and equinox 1900 can be readily computed by means of the formulæ—

$$\tan \alpha = X/Y$$
$$\cot \delta = -X \operatorname{cosec} \alpha \tan 1' = -Y \sec \alpha \tan 1'.$$

Mr Hough remarks that if meridian observations of stars of small polar distance be referred to the pole of a different epoch, the necessary transformations for precession are very laborious in terms of right ascensions and declinations; he then shows that it is more convenient to transform the meridian observations into rectangular co-ordinates referred to the pole of the epoch of observation and to apply the transformations for precession directly to these rectangular co-ordinates. He accordingly proceeds to investigate the formulæ for this transformation (*loc. cit.*, pp. 248–251), and gives convenient tables for their application, based on the constants both of Struve-Peters and Newcomb.

The work concludes with a table in which the rectangular co-ordinates of 106 of the principal stars are converted into their corresponding values in right ascension and declination—this conversion being limited to the stars of which meridian observations of precision already exist.

Whilst the whole work forms a model of thorough discussion, there is no doubt that the original material on which it is based might have been greatly improved. The work as it stands affords a very sound criterion of the general accuracy that should be expected from the rapid methods necessarily adopted in the general work of the Cape Astrographic Catalogue. But in view of the special importance of the circumpolar area and of the facilities which that area offers for the investigation of systematic errors, it appears desirable that the work should be repeated, with special precautions as to the "squaring" and internal centring of the object-glass, the elimination of "tilt" of the plates, the thorough investigation of a new *réseau*, and the selection of specially favourable conditions of atmospheric definition, together with every possible care and refinement in the measurement of the plates.

DOUBLE STARS.

For many years the observation of double stars formed no part of the regular work of the Cape Observatory. Fallows & Henderson had far too limited a staff to undertake work beyond meridian observations with the Transit Instrument and Mural Circle, and indeed they were unable to keep up the systematic reduction of the observations which they accumulated with these instruments.

Maclear was, more or less, in a similar position; for, superadded to his necessary meridian work, he had undertaken the field survey of his Arc of Meridian and its subsequent reduction. However, with the strong support of Sir John Herschel, he applied for and obtained a 7-inch equatorial by Merz, which appears to have been brought into use in 1849; and, whilst he chiefly devoted it to the observations of comets, he made, in the years 1849–68, a series of observations on α Centauri as a double star, on 196 nights, which, however, he did not publish. Gill placed these observations at the disposal of Dr Elkin for his Inaugural Dissertation "Ueber die Parallax von α Centauri" (Strassburg, 1880), and they are in part published in that work. Beyond these, the Observatory records contain only observations on 58 nights of 12 other double stars by Maclear or his assistants.

Under Stone's directorate (1869–79), and in accordance with the instructions given to him, the whole force of the staff was devoted to overtaking arrears of reduction and the observations for and preparation of the *Cape Catalogue* for 1880.

Thus, at the Cape Observatory, as has always been the case elsewhere, the subject of double star measurement on any great scale waited for the proper man to undertake it.

The discovery and observation of double stars to be successfully pursued requires special gifts—an inborn capacity, a delight in the exercise of exceptional acuteness of eyesight and natural dexterity, coupled with a grasp of the true significance of what is observed, are all required to impart the necessary enthusiasm. No amount of training or direction could have created the Struves, a Dawes, a Dembowski, or a Burnham. The great double star observer is born, not made, for no extensive series of double star discovery and measurement has ever emanated from a regular observatory merely through the influence of the director; highly important work of that kind has only been accomplished by men who were originally driven to it by the sheer compulsion of inborn taste.*

* Although I enjoyed exceptionally good eyesight until over 50 years of age, I seldom could separate certain very close double stars, which seemed evident as such to expert double star observers, using the same telescope on the same night, nor could I pretend to measure the distance between two intermixed discs which a select few succeed in doing with closely accordant results; and yet, with small or large meridian instruments, or with a heliometer or filar micrometer, I could always make other observations as good as those of any of my contemporaries and perhaps better than some of the double star observers.—D. G.

Digitized by Google

These facts probably explain why the history of the Cape Observatory was so barren of results in the discovery and observation of double stars until Mr Innes joined its staff in 1896.*

The fact that, with comparatively feeble means and as an amateur in Australia, Mr Innes had in his spare hours discovered about 40 new double stars and published their estimated distances and position angles, led Gill to the belief that probably here was the man for the missing work, although it formed no part of his *official* work either to engage in astronomical observing or to contribute in any way to the publications of the Observatory.

These expectations were amply justified. Mr Innes, before his arrival at the Cape, had made some progress in the preparation of a card-catalogue of reference to the known double stars of the Southern Hemisphere; this catalogue he not only completed within the first two years of his arrival, but during the same period he discovered upwards of 280 new double stars with the 7-inch equatorial. All these discoveries were incorporated in his "Reference Catalogue of Southern Double Stars" (*Cape Annals*, vol. ii. part 2), published in 1899; and the work, by its excellent arrangement and completeness, has ever since proved an invaluable aid to all who are engaged in this department of astronomy.

The results of all observations of double stars made under Maclear (1849–1868), and those subsequently made during Gill's directorate (1899–1903), were reduced and prepared for press by Mr Innes, and published in 1905 (*Cape Annals*, vol. ii. part 4), together with notes as to the discoverer of the star and its proper or orbital motion, when these facts are not dealt with in the Reference Catalogue.

The earlier observations were made with a Merz Micrometer attached to the 7-inch refractor, the second series with a micrometer by Repsolds adapted to the 18-inch visual refractor of the Victoria telescope.

The observations were made as follows:—

By Sir Thomas Maclear	177	sets.
„ Mr William Mann	19	„
„ Mr George Maclear	43	„
„ Mr R. T. A. Innes	1653	„
„ Mr J. Lunt	231	„
„ Sir David Gill	11	„
„ Mr S. S. Hough	1	„
Total	2035	

Each set of measures represents the observations of a single night, and, in general, includes observations both of position-angle and distances.

A refracting telescope of 26 inches aperture, with object-glass and equatorial mounting by Sir Howard Grubb, and a filar micrometer by Repsolds of Hamburg, are now under construction for Mr Innes at Johannesburg, and he proposes to devote them to the farther measurement of double stars, so that the Cape Observatory will in future probably leave that department of astronomy entirely in his able hands.

ASTROPHYSICAL OBSERVATIONS.

The first object to which the Victoria telescope was directed was a practical study of the conditions necessary to develop high accuracy in observations for the determination of stellar velocity in the line of sight. These studies involved not only long delay in the original design and construction of the spectroscope, but subsequent alterations, to promote ease of working, which were carried out at the Cape, also occupied much time. Farther delay was caused by the necessity of returning the spectroscope to Cambridge for the substitution of four prisms of whiter glass, in lieu of the three original prisms of denser glass and the addition of appliances for maintenance of constant temperature (see p. lxxviii).

Then came a prolonged series of experimental work during which certain side issues intervened.

In a paper read before the Royal Society on 1897 April 8 (*Proc. R.S.*, lxi. p. 215), Mr Frank M'Clean (from his study of the star spectra photographed by himself with a 20° objective-prism applied to his telescope of 12 inches aperture at Tunbridge Wells) pointed out that, in addition to lines of hydrogen and helium in the spectra of stars of the "Orion" or "Helium" type, there are certain additional lines of which the origin was then unknown. He suggested, from the resemblance of their grouping to the lines in Thalen's spark-spectrum of oxygen, the possibility that the unknown stellar lines were also due to oxygen.

* The circumstances under which Mr Innes came to the Cape Observatory are described in a footnote on p. lix.

Digitized by Google

In a farther paper read before the Royal Society on the 3rd February 1898 (*Proc. R.S.*, lxii. p. 417), Mr Frank M'Clean discussed the origin of the lines in question, basing his conclusions on star spectra photographed by him at the Cape of Good Hope in the year 1897 (see p. xliii). In regard to the spectra of certain helium stars he found "a close correspondence in the grouping of the extra lines with the spectrum of oxygen; the most remarkable correspondence is in the case of the large group on either side of Hδ. A slight shift of about a tenth metre is required to bring the groups into identical positions. However, the close similarity of the whole grouping of the two spectra, as they appear on the plate, admits of little doubt that the two extra lines actually constitute the spectrum of oxygen. If this be established, the spectrum of the first division of helium stars would be due to hydrogen, helium, and oxygen."

In his subsequent work, *Spectra of Southern Stars* (Stanford, London, 1898), Mr M'Clean concludes: "Taking everything into account, the succession of coincidences between the extra lines of β Crucis and the Oxygen Spectrum can only be accounted for on the basis of the extra lines being in the main actually due to oxygen."

Having regard to the fact that the Cape Observatory owes its entire astrophysical equipment to the munificence of Mr Frank M'Clean, it seemed desirable to devote its first research to the further confirmation of his discovery. Thus the first spectra discussed were those of certain helium stars. The results are published in the *Proc. R.S.*, lxv. p. 196, and give the most complete confirmation of the accuracy of Mr M'Clean's conclusions as to the presence in these stars of lines due to oxygen. The spectra of β Crucis, β and ϵ Canis Majoris, and β Centauri were all found to contain the lines of hydrogen, helium, and oxygen, the line 4267·2 (probably carbon) and 4481·17 (probably magnesium); but, in addition, they all contained the three, then unknown, strong lines 4552·79, 4567·90, and 4574·68. The fact that these lines were due to silicon was cabled to the Royal Society early in November 1899. The message was sent from the Cape early in that month, but was, for some unexplained reason, delayed in transmission, and was read at the meeting of the Royal Society on the 23rd November 1899, viz.: "Lines of β Crucis 4552, 4569, 4575, described unknown in my April paper, Lunt finds due to silicon; paper follows—Gill" (*Proc. R.S.*, lxv. 448).

Mr Lunt's paper in question was received on November 27, and is printed in *Proc. R.S.* lxvi. p. 44. On the *same day* (November 23) a paper by Sir Norman Lockyer was read, in which he also announced that the three lines in question were due to silicon. During some experiments made with a view to securing the best elementary line spectrum of oxygen, in which he had been led to employ the induced current from an 18-inch Apps coil with four large jars and an air gap, Mr Lunt happened to expose an Argon tube (marked 2 mm. pressure), and, on developing the photograph, was much surprised to find that the spectrum showed the well-recognised lines of oxygen and the three unknown lines in the green part of the spectrum above mentioned. A subsequent photograph of the spectrum of ϵ Canis Majoris, in which the Argon tube was used in the above-described conditions, established the identity of these three lines not only in position but in relative intensity. It was at first assumed that the origin of the unknown lines lay in the gaseous contents of the tube, for four Argon tubes in succession gave precisely the same results, viz., the Argon spectrum with an ordinary discharge and the then unknown lines, together with the disappearance of the Argon spectrum, as the result of using the four jars and the air gap. But, later, on trying a specimen tube of pure Argon, presented by Sir William Ramsay, neither the unknown lines nor those of oxygen made their appearance, even when the most intense disruptive spark was employed. Another tube of helium, also the gift of Sir William Ramsay, gave with the ordinary discharge the pure spectrum of helium, but with the highly disruptive charge the helium spectrum *vanished entirely*, and was replaced by the unknown lines and the spectrum of oxygen. With the ordinary discharge the pure helium spectrum reappeared. The helium tube had platinum electrodes; thus these last observations negatived the possibility that the gaseous contents of the tubes or the metallic electrodes could be the origin of the substance searched for. Beads of glass, of sodium silicate, and of pure quartz fused on platinum wires gave spectra with the unknown lines. These experiments seemed to indicate that the abnormal spectra observed were due to decomposition (by high disruptive discharge) of the glass tube or of the fusible blue glass employed to attach the terminals, and to leave little room for doubt that the element sought was silicon. Nevertheless, it seemed desirable to confirm the result in another way, by examining the spectrum of a gaseous silicious compound. Platinum wires were sealed into the ends of a wide glass tube ($\frac{3}{8}$-inch internal diameter), the ends of the wires leaving a gap of only $\frac{1}{8}$ of an inch for the passage of the spark. The tube was filled with silicon tetrafluoride, and, after the gas had been passing for some time, it was sealed off at atmospheric pressure. An ordinary discharge, without jars or air gap, passed through the gas, gave a banded spectrum of the compound itself. The disruptive discharge, obtained by using four jars and an air gap, at once gave the unknown lines, which were thus indisputably proved to be due to silicon.

Sir Norman Lockyer (*Proc. R.S.*, lxii. p. 65) states: "The use of the spark with large jars in vacuum tubes

Digitized by Google

results in partial fusion of the glass and the appearance of lines which have been traced to silicium"; but he failed to recognise the lines 4552·79, 4567·90, and 4574·68 as due to silicon, because *in the same paper* he includes two of these lines in a table of wave lengths of lines due to unknown *gases*; the remaining line he describes as an unknown line in Bellatrix. In his paper (*Proc. R.S.*, lxi. p. 443) Sir Norman Lockyer regards two lines at 4128·6 and 4131·4 as the most conspicuous enhanced lines of silicon, and indeed they are the only two lines which he labels Si in his published photographs. Lunt also noted that, whilst Lockyer's enhanced silicon lines 4128·6 and 4131·4 and also Lunt's three lines 4552·79, 4567·90, and 4574·68 are all visible in the spectra of Bellatrix, β Crucis, and ϵ Canis Majoris, the three latter lines do not occur in the spectra of α Cygni, Sirius, and Rigel. Lunt in his preliminary experiments with the tube of silicon tetrafluoride, employing the highest disruptive spark, found that Lockyer's lines 4128·6 and 4131·4 are much enhanced with respect to Lunt's three lines; indeed, it was found possible, by suitable exposure, to obtain Lockyer's two enhanced lines without Lunt's three lines becoming evident. He also found that Lockyer's lines 4128·6 and 4131·4 in the silicon spectrum from the argon and helium vacuum tubes are by no means so relatively prominent as they are in the silicon spectrum derived from the use of an intense disruptive spark in silicon tetrafluoride.

Mr Lunt followed up this preliminary paper by a careful study of the spectra of silicon, fluorine, and oxygen, which is published in the *Annals of the Cape Observatory*, vol. x. part 2. He there acknowledges that both Lockyer and he himself had overlooked a paper by A. de Gramont (*Comptes Rendus*, vol. cxxiv. p. 192), in which the three lines had, in 1897, been recognised as silicon lines in the spectrum of fused silicates. Lunt also corrects the mistaken speculation advanced by himself (*Proc. R.S.*, lxvi. p. 49), viz., that the spectra which contain the lines 4128·6 and 4131·4 (enhanced), without the lines 4452·79, 4567·90, and 4574·68, may be hotter than those which also contain the latter lines prominently marked; and he now admits that Lockyer is right in regarding Bellatrix, β Crucis, and ϵ Canis Majoris (where all the lines in question are visible) as hotter stars than α Cygni, Rigel, and Sirius, where the three latter mentioned lines are wanting. The reader must be referred to the volume in question for further details and to *Cape Annals*, vol. x. part 2, Appendix I., for a diagram showing the lines which have been identified by Mr Lunt at the Cape in the spectrum of Canis Majoris, viz., those of oxygen, hydrogen, helium, nitrogen, carbon, silicon, calcium, and magnesium.

Gill (*Proc. R.S.*, lxviii. p. 456) found a very exact agreement between the spectrum of η Argus and that of Nova Auriga, and concludes that "whatever the causes of the origin of the Nova in Auriga, very similar causes have probably produced the historical changes in the brightness of η Argus."

It was not until the beginning of 1906 that all the preliminary experiments with the four-prism spectroscope were completed and the instrument and methods of working were considered to be sufficiently perfected to warrant a commencement of the systematic programme of determination of stellar velocities in the line of sight which Gill had planned with the object of making a reliable independent determination of the Solar Parallax. From the time of Gill's retirement in February 1907, the observations were continued under the directorship of Mr Hough, and were completed in May 1908. The photographs were made by Mr Lunt with assistance from Mr Simpson, and were measured by Dr Halm. A complete account of the observations and their admirable discussion by Dr Halm are given in the *Annals of the Cape Observatory*, vol. x. part 3. A short account of the work and its results are given at p. lxxviii of the present work.

Besides the plates connected with the parallax programme, there were many others taken before and during the progress of the work. These plates have been measured by different machines, and the results are discussed and published in the *Annals of the Cape Observatory*, vol. x. part 1. Four different measuring machines were employed, viz. :—

(*a*) The well-known Hartmann machine (*Astrophysical Journal*, xxiv. p. 285).
(*b*) The Toepfer apparatus, in which the motion of the plate under the microscope is made and measured by a micrometer screw.
(*c*) The Zeiss apparatus, in which the movement of the plate is read by a scale and micrometer.
(*d*) Dr Halm's wave-length apparatus, described in the *Annals of the Cape Observatory*, vol. x. part 1, pp. 135–139.

The results give the radial velocities of thirty-three stars at a number of epochs, based on measurements of 653 plates. Further investigations on the radial velocities of a large number of stars are now in progress, in which the four-prism spectroscope and Hartmann measuring machine are employed.

Digitized by Google

MISCELLANEOUS OPERATIONS.

The miscellaneous operations which are not separately dealt with elsewhere in the present work include such matters as the determination of the fundamental longitude of the Cape Observatory; the longitude connection of local stations in South Africa with the Observatory; the comparison of geodetic standards and determination of the lengths of invar tapes for geodetic base lines; the training of astronomical observers, surveyors and travellers; meteorological observations, etc.

The chief longitude operations were those connecting the Cape Observatory (*a*) with Greenwich *via* Berlin, Malta, Suez, Aden, and Durban; (*b*) with Greenwich *via* Ascension.

Full accounts of operation (*a*) will be found in the *Annals of the Cape Observatory*, vol. i. part 2; and of operation (*b*) in a publication of H.M. Hydrographic Office, entitled *Report on Determination of Difference of Longitude, Greenwich-Ascension—Cape*, fol., London, 1908. A brief summary of the results of both these operations will be found at p. xxxv of the present work.

Besides the longitude operations connected with Geodesy, *i.e.* the connection of the following stations with the Cape Observatory, viz., Hanover, Kimberley, Port Elizabeth, Berlin (C.C.), Umtata, Kokstad, Newcastle (Natal), Durban, Buluwayo, and Salisbury, the results of which are published in the volumes of the *Geodetic Survey* of South Africa, the following minor longitude operations have also been carried out:—

1881. Heidelberg, Standerton, Pretoria (all in the Transvaal), in co-operation with Major le Mesurier, R.E.
1882. Montagu and Aberdeen Road (Cape Colony), in connection with the British Transit of Venus Expeditions.
1883. Kimberley, on the occasion of a visit to that place by Dr Elkin.
1886. Barclay West and Taungs in co-operation with the Bechuanaland Expedition, and Dryhartz in connection with the Survey of Bechuanaland.

In not a few other cases special time determinations were made at the Observatory and signals were exchanged with surveyors and travellers, but no records of the corresponding observations were received in return.

A series of telegraphic longitudes on the west coast of Africa was determined in August, September, and October 1889. The results depend upon observations for personal equation between Mr Finlay and Commander Pullen, R.N., at the Cape, and on subsequent observations for time made by Commander Pullen as travelling Observer (employing vertical transits of stars with a 14-inch vertical circle) and by Mr Finlay at the Cape with a transit instrument. The work was brought to a very sad conclusion by the lamented death of Commander Pullen from malarial fever, at Bonny on 2nd November. The last work of his life was to exchange signals with Mr Finlay at the Cape on 29th October. These excellent observations were reduced and prepared for press at the Cape, and were published by the Hydrographic Department of the Admiralty in March 1891. The results give the latitudes and longitudes of Port Nolloth, Mossamedes, Benguelo, Sâo Thomé, and Bonny.

In 1898 signals on three nights (with time determinations at both ends) were exchanged with the Cape Observatory by Capt. Close, R.E., and Dr E. Kohlschutter (members of the Commission for Delimitation of the Anglo-German Boundary from Lake Nyassa to Lake Tanganyika), to determine the longitude of Nkata on Lake Nyassa. The operation was entirely successful, and gave for the longitude of the station occupied

$$2^h\ 17^m\ 7^s{\cdot}6\ \text{E.}$$

This station is $5^s{\cdot}2$ W. of the shore of the Lake at Nkata Bay; the previously accepted longitude was about six miles in error.

In this same year similar signals were exchanged on two nights with Captain Watherstone, R.E. (a member of the Anglo-Portuguese Boundary Delimitation Commission), to determine the longitude of Umtali. The results gave

$$2^h\ 10^m\ 41^s{\cdot}2\ \text{E.}$$

Towards the end of 1904 Major Watherstone, C.M.G., R.E., made at the Cape a satisfactory determination of his personal equation on four nights relative to Mr Pett, the former observer employing a 14-inch Altazimuth and observing vertical transits of stars near the prime vertical, the latter a transit instrument in the meridian. The relative personal equation of the two observers in sending and receiving mirror signals was determined by use of an artificial cable. On Major Watherstone's return to Accra in February 1905, signals were exchanged for difference of longitude on four nights with simultaneous observations for time at both stations.

Digitized by Google

The final result gave

	h	m	sec.	p.e.
. Accra, W. of Cape Transit Circle	1	14	44·309	±0·023
Cape Transit Circle, E. of Greenwich (p. xxxv)	1	13	54·631	±0·022
Accra, W. of Greenwich	0	0	49·678	±0·032.

The length of the cable was 3648 knots and the current time +1·420 sec. The probable error of the result includes the probable error of the determinations of personal equation in time determination and in the sending and receiving of signals.

The liberality of the Union Castle Steam Ship Company (which provided free transport for the observer and instruments) enabled Mr Pett to devote his holiday, in the year 1905, to a visit to St Helena, and he took advantage of the opportunity to determine the longitude of the island. At St Helena Mr Pett observed vertical transits with the same 14-inch Altazimuth as had been employed by Commander Pullen in 1889 and by Major Watherstone in 1904; at the Cape Mr Cox employed the transit circle. Observations were made at the Cape Observatory for personal equation on five nights before Mr Pett's visit to St Helena and on five nights after his return—with the result :—

	Pett—Cox. s
Before exchange of signals	−0·069
After exchange of signals	−0·103
Mean	−0·086

The personal equations in sending and receiving signals were found to be insensible.

The results were :—

	h	m	s	s
"The Briars," St Helena, W. of Cape Transit Circle . . .	1	36	45·311	±0·023*
Cape Transit Circle, E. of Greenwich	1	13	54·631	±0·022
"The Briars," St Helena, W. of Greenwich	0	22	50·680	
Johnson's Observatory, on Ladder Hill, W. of "The Briars" . .			2·722†	
Johnson's Observatory, W. of Greenwich	0	22	53·402	

As mentioned at p. xxiii, Sir Thomas Maclear instructed Livingstone in the use of the sextant and gave much of his own time to reduction of the observations subsequently made by the great traveller in course of his travels.

In 1874 Mr Stone (see p. xxvii) made an expedition to Klipfontein and there successfully observed the total solar eclipse on the 16th April of that year. On the same expedition he made a valuable series of magnetic observations in Namaqualand—the first series of its kind in that region.

Daily meteorological observations are made at the Observatory, which are communicated to the Cape Meteorological Commission.

TIME SIGNALS.

In accordance with Admiralty instructions a daily time signal has been given by the Observatory from the first days of its activity; indeed, one of the conditions which was held to be necessary in selecting the site of the Observatory was that it should be within sight of Table Bay, in order that time signals might be supplied for the use of shipping.

In the days of Fallows and Henderson, the Astronomer, a few minutes before the appointed hour, ascended to the roof of the Observatory, taking with him a chronometer (of which he had previously determined the error) and a large brass-barrelled pistol. This ungainly weapon is still preserved as an interesting relic. When the second hand of the chronometer reached the appointed instant the pistol was discharged and its flash was observed by a signalman provided with a telescope, and he, by means of a rope attached to his foot, dropped a time ball in the neighbourhood of the Bay.

In the days of Maclear, a time ball was erected near the Observatory which was dropped in lieu of the pistol signal.

Later, when the electric telegraph came into use, a time ball was dropped at the Docks in Cape Town; a Disc at the end of an arm was dropped at Simons Town, and similar Discs at the Light House, Port Elizabeth

* This probable error is computed solely from the agreement of the longitudes on the five nights in September and October 1905, on which signals were exchanged between St Helena and the Cape, but does not include the probable error due to the small uncertainty of the personal equation.

† There is some small uncertainty about the difference of longitude between "The Briars" and "Johnson's Observatory." The above difference of longitude is taken as nearly as can be estimated from the Admiralty Chart.

Digitized by Google

and at East London. Later a gun was fired at the Imhoff Battery, Cape Town, and the time signal was distributed along the Government telegraph system for use in Cape Colony, the Orange River Colony, and the Transvaal.

Until 1892, February 8, these signals were made at noon and one o'clock local mean time of the Cape Observatory. On the date in question these signals were discontinued, and a single signal at Greenwich Mean Noon was substituted. At the same time arrangements were made for changing the civil time of the Colony. Previous to the date in question, "Observatory Mean Time" was used for telegraph purposes throughout the Colony; the disconnected railway systems used the local time of their principal terminal station. Each principal town had clocks fitted with two hands, one showing local the other railway time; and even the smaller villages used local as distinct from railway time. On the junction of the eastern and western railway systems of Cape Colony, some change in the time arrangements became necessary, and it was decided that the meridian of $22\frac{1}{2}^{\circ}$ (*i.e.* one and a half hours) E. of Greenwich should be adopted for all purposes throughout the Colony. Circulars were prepared giving a popular explanation of the proposed change; and magistrates, field cornets, and other town or village authorities were separately instructed that—

"At midnight on Sunday, February 7, the public clocks at should be set forwards ;
backwards ."

The change of time was thus made simultaneously throughout Cape Colony without the slightest hitch or inconvenience; indeed, a week after it took place it seems to have been generally forgotten that any change had been made. The system worked so well that soon afterwards the uniform time of Cape Colony was adopted in the Transvaal and Orange River Colony (then the Orange Free State). When the change was made, Gill strongly urged that the meridian of two hours E. of Greenwich should be adopted, in order to adhere to the international programme by which Civil Time is adopted for meridians of even hours E. or W. of Greenwich, but Ministers feared to allow so great a change as three-quarters of an hour and adopted one and a half hours E. of Greenwich as an approximation to the mean longitude of Cape Colony. The change in time thus only amounted to about quarter of an hour, but Gill insisted that the time signal should be given at the *even* hour of Greenwich Mean Noon. In 1893 an additional time ball was erected at Port Alfred, and a clock with seconds dial was placed in the Harbour Tower at Cape Town Docks; this clock is electrically controlled by the Observatory normal mean time clock, and, by means of a galvanometer on the clock face, its coincidence with the Observatory clock can be verified every minute.

In 1894 a new time ball was erected in a much more conspicuous position near the Resident Engineer's Office of the Cape Town Docks. The instant when this ball begins to fall and the instant when it descends to the bottom of the shaft have been automatically recorded on the Observatory Chronograph since 1895 March 20. From 1901 November 1, an additional hourly signal was sent from the Observatory by which the minute hands on the station clocks on the railway lines can be set to time every hour.

As the result of representations made from Natal and the Transvaal, the question of Gill's original proposal to adopt for the whole of South Africa the meridian of two hours E. of Greenwich was raised, and on 1903 March 3 all the clocks in South Africa were set forward half an hour. The change was accomplished without difficulty by means similar to those which have been already described in connection with the change of Civil Time in Cape Colony in 1892.

Digitized by Google

THE CAPE OBSERVATORY, 1879-1907.

UNDER the preceding headings an endeavour has been made to write a history of the *work* of the Cape Observatory. To have preserved strict chronological order otherwise than under separate headings would have been but to produce an enlarged form of Annual Reports and to have sacrificed to a great extent such scientific interest as may be found in a continuous narrative of successive efforts to solve a particular problem. Few astronomical problems can be taken up and definitively dealt with in the course of a single year, and it would have been wearisome to the reader to trace out the successive steps, or results, in a special line of work if pages of irrelevant matter intervened before the full progress made in any particular direction could be realised.

Some facts remain for record in chronological order with reference to subjects which come within the administrative work of the Astronomer at the time, and on that account it seems best to resume the form of personal narrative.

On arrival at the Cape, on the 26th May 1879, my wife and I took up residence in a hotel in Cape Town until a certain amount of preliminary painting, etc., had been carried out in our official quarters at the Observatory.

From the staff we received a most cordial welcome, and my first duty was to examine the state of the instruments, buildings, and grounds, and to draw up a report for presentation to the Admiralty.

Being without previous official experience and the Admiralty having had no opportunity of testing the soundness or otherwise of my judgment in such matters, it seemed desirable to refer that report for an independent local opinion before sending it to the Secretary of the Admiralty. I accordingly begged Commodore Richards (afterwards Admiral of the Fleet, Sir Frederick Richards, G.C.B.), then Commander in Chief on the Cape Naval Station, to inspect the Observatory. He responded kindly and promptly to my invitation, and made a thorough examination of the buildings and grounds, afterwards forwarding my report to the Admiralty. I can never forget, nor sufficiently express, my indebtedness to Commodore Richards for the line of action he took in this matter and for the keen interest he showed in the Cape Observatory from the first days of my directorate to the end of his life. Indeed, I cannot refrain from an expression of my belief that, without the benefit of his wise counsel and the encouragement of his constant sympathy and support, the equipment of the Cape Observatory would have been less complete than it is at the present day, and its record would have contained fewer results of value to science.*

From every point of view I owe to him a debt of gratitude that can never be repaid. To use his own phrase, he "passed me on" to his successor in office at the Cape; and so, from Admiral to Admiral,† there was formed a continuous link of co-operation and friendship which was not only one of the most delightful features of my life at the Cape, but which, I venture to think, was also conducive to the best interests of the Observatory and of the public service.

I found the Observatory grounds, buildings, and water-supply in a very unsatisfactory state, so that immediate steps were necessary to bring about a better state of things. After heavy rains the road leading from the railway station to the observatory hill was nearly impassable for about 100 yards, the water in neighbouring swampy ground flooded the road, so that frequently the computers, and others not in residence on the hill, had to be carried across in carts. As a preliminary step in the right direction, Commodore Richards suggested the employment of three resident Kroomen to keep the grounds in order. These Kroomen come from the West Coast of Africa, and are employed at Simons Bay for loading coal and other heavy work in H.M. Dockyard there; they also form part of the crews of all H.M. Ships on the Cape Station. At first the Admiralty granted two Kroomen and a resident carpenter, in addition to a small annual sum for repairs, and then matters began to improve. But years of neglect had to be made good, and there ensued a continual struggle for necessary funds until about 1886, when the Observatory vote for "New Works" and "Repairs and Maintenance" was transferred to the department of the Admiralty Director of Works. The first report of his Engineer convinced the Director of Works in London as to the reasonableness and moderation of my demands, and the previous allowance for repairs and maintenance was immediately tripled in amount. Cast-iron pipes were laid to bring in a supply of pure water from the railway main; the road to the station was raised above the highest water mark; the avenue and walks in the grounds—previously little better than

* Sir Frederick Richards was Junior Lord of the Admiralty 1882–1885, Second Sea Lord 1885–1893, and First Sea Lord 1893–1899. He died at Horton Court, Gloucestershire, on the 28th September 1912.

† On the appointment of Sir Noel Salmon as Sir Frederick Richards' successor, the Cape was raised to a Rear-Admiral's command.

Digitized by Google

tracks down the hillside—were graded, drained, and gravelled; the swamp at the bottom of the hill was filled up and planted with varieties of gum trees (Eucalyptus); fences were erected; and the whole of the buildings were thoroughly overhauled and properly painted and maintained in good order. The worn-out floors of the Observatory were re-laid, and suitable shelving accommodation was provided in the central hall for the valuable library. In fact, as a previous Astronomer, Mr Henderson, would have put it (see p. xvii), the Observatory became "an agreeable place of residence," and "suitable for the undisturbed cultivation of science." When new buildings or any extensive alterations were required, it was now possible to call in the Resident Civil Engineer at Simons Bay, and, after consultation with him, to obtain plans and reliable estimates to be sent home for sanction. From first to last this arrangement has worked admirably, and it saved much of the misunderstanding and worry which in the early days of my service arose from the difficulty that then existed in bringing the Admiralty to realise the condition and needs of the establishment. Needless to say, all these improvements were not effected at once; they were carried out gradually as funds and opportunity permitted.

The only instruments mounted at the Observatory in 1879 were the transit circle, the 7-inch equatorial, and the photo-heliograph. An account of the steps taken to put the two first-mentioned of these instruments in proper repair will be found on pages xl and xli.

1880. The next points of astronomical interest were the arrival of the 4-inch heliometer in December 1880 and of Dr Elkin in January 1881. Descriptions of the instrument itself and of Dr Elkin's co-operation in the work done with it during the next two and a half years will be found at pp. xli and lx–lxvi. Upon the kind invitation of Commodore Richards, I accompanied him, on the 20th September 1880, as his guest on board H.M.S. "Boadicea" to Durban, where I had the satisfaction of inducing Sir George Colley to forward the project of the Geodetic Survey (see p. ciii) and of proving that submarine signals for longitude could be satisfactorily exchanged between Durban and Aden without the necessity of employing an intermediate observer at Zanzibar. The particulars of the experimental trial of longitude signals were communicated to the Admiralty, and, after some delay, the instruments

1881. necessary for the work reached the Cape on 1st March 1881. April and May of 1881 were occupied with inter-comparisons of personal equation at the Cape. In the end of May I went to Natal, where I started the longitude operations, and received from Sir Charles Mitchell (then acting Governor of Natal) authority to prepare the specifications for the instruments required to commence the Geodetic Survey.

The longitude operations connecting Aden and the Cape occupied the remaining part of 1881, and final intercomparisons of personal equation were made in February 1882. A complete account of the operations is given in the *Cape Annals*, vol. i. pp. (1) to (68); the results are given at p. xxxv of the present work.

1882. In 1882 appeared the great comet of that year, first accurately observed by Mr Finlay (p. xlviii)—an event of great astronomical interest, not only because of the small perihelion distance of the comet, its extraordinary brilliancy, its visibility by day, and its actual observation up to entrance on the Sun's limb (see p. clxiii), but because it was the first comet to be successfully photographed; and that success, coupled with the fact that excellent photographs of the surrounding stars were also shown on the plate, led to the first application of photography to the general cartography of the sky in the form of the *Cape Photographic Durchmusterung* and the subsequent great international undertaking of the *Carte du Ciel* (see p. cxxxi). On 6th December of the same year occurred the Transit of Venus, which brought to the Observatory Fathers Perry and Sidgreaves (our guests both on their way to and from their station in Madagascar), Mr A. Marth (representing the British Transit of Venus Expedition), and Professor Simon Newcomb with his American party of astronomers, consisting of:—Lieut. Thomas L. Casey, jr., U.S.A.; Ensign J. H. L. Holcombe, U.S.N.; and Mr Julius Ulke, D.C.

The observers in Cape Colony were:—

At the Cape Observatory .	H.M. Astronomer and staff, excepting Messrs Finlay and Pett.
At Aberdeen Road . .	Mr Finlay (1st Cape Assistant) and Mr Pett (3rd Assistant).
At Montague Road . .	Mr Marth and Mr C. A. Stevens (formerly 3rd Assistant at Cape Observatory).
At Wellington . . .	Professor Newcomb and his American party.

Needless to say, our visitors were welcomed with the utmost pleasure and interest and received every assistance that the Observatory could give them. Plans were also arranged for subsequent co-operation with Professor Newcomb, which resulted in the work mentioned at pp. cxxx and cxxxi.

A new 6-inch equatorial by Sir Howard Grubb, which had been specially provided for the observation of the Transit of Venus, was erected, under a new dome, previous to 6th December. The equatorial mounting of this instrument was subsequently exchanged by Sir Howard Grubb for a stronger one; and now, with the original object-glass and tube, forms the 6-inch equatorial described at p. xlii.

Digitized by Google

The weather in South Africa on the whole was not unfavourable, and many observations of contact were made; but it is to be feared that neither these observations nor the numerous ones made elsewhere throughout the world contributed much of value to the definitive determination of the solar parallax (see p. lxix).

In January 1883 I succeeded in arranging an agreement between the Governments of the Cape Colony and **1883.** Natal to undertake the principal triangulation of both Colonies as a joint work. In June of the same year, Captain Morris, R.E. (now Colonel Sir William Morris, K.C.M.G., C.B.), and Lieuteuant Laffan, R.E. (now Colonel Laffan, C.M.G)., and fourteen non-commissioned officers and men of the same corps, came to the Cape, where I joined them, and then accompanied the party to Natal. There I made a short stay, until the base measurement was fairly started, and left Natal with an assured feeling that the work was in good hands. An account of the principal triangulation in Natal and of all the subsequent survey operations has been given at pp. ci–cxxiv, and need not be farther referred to in this chapter.

My friend Dr Elkin, who had been my guest from the beginning of 1881 and had done such successful work with the heliometer during his stay (p. lx), left the Cape on the 16th May 1883 to take charge of the new heliometer at Yale College, Newhaven, U.S.A.—the instrument with which he has since made so many valuable contributions to our knowledge of stellar parallax.

In 1884 the results of my own and Dr Elkin's researches on stellar parallax were presented to the Royal **1884.** Astronomical Society, and the work was printed in their Memoirs (*Mem. R.A.S.*, vol. xlviii.). During my leave of absence in England in that year, I was also able to pass through press the *Cape Catalogue of 4810 Stars for the Equinox of 1850*; the *Results of Meridian Observations, 1879, 1880, and 1881*; *Extra Meridian Observations, 1881, 1882, and 1883*; and the *Account of the Telegraphic Longitude Operations connecting Aden and the Cape* (*Cape Annals*, vol. i.). I also took advantage of the same visit to represent the necessity for a new and more powerful heliometer, to enable me to carry out further researches on stellar parallax, and to take advantage of such favourable opportunities as might offer for determining the solar parallax by the observation of minor planets.* The proposal was favourably considered by the Admiralty; and, on their recommendation, the necessary credit was sanctioned by H.M. Treasury. A contract was accordingly entered into with Messrs Repsold of Hamburg for the construction of a heliometer of 7 inches aperture, to be completed by the 15th February 1887. An Observatory (of iron, sheltered by open wooden louvre-work), and a dome (iron frame covered with papier-mâché), were ordered from Sir Howard Grubb. The plans for the foundation of this Observatory (including a fire-proof record room) were prepared in the Office of the Admiralty Director of Works. During the year 1884 it became evident that the disintegration of the inner surfaces of the Crown and flint lenses of the object-glass of the Transit Circle (already considerable in 1879) were so rapidly increasing as to create an amount of false light in the field that rendered it almost impossible to observe stars below the first magnitude in daylight. This fact greatly diminished the value of the meridian observations of the Sun then in progress. Accordingly observations with the transit circle were discontinued on February 8, and the object-glass was sent to Messrs Troughton and Simms to be repolished. Advantage was taken of the opportunity to have steel microscope screws substituted for the gun-metal ones (which showed marked wear since they were replaced in 1879), also to have new collimators made and other changes carried out which are described on page xl. The object-glass, microscopes, etc., were returned to the Cape on 20th August, and observations were resumed on 24th August.

The photographic work of the *Cape Photographic Durchmusterung* was begun on 1885 April 2. Its progress **1885.** is dealt with at p. xlix, and need not be further mentioned in this chapter.

In 1886 Professor Kapteyn began systematic work in measuring the plates of the *Cape Photographic* **1886.** *Durchmusterung* (see p. liii). The Heliometer Observatory was also completed, and Messrs Repsold reported that the new heliometer would be ready for inspection in February 1887.

This year was, in Mr Finlay's hands, rich in cometary work. In September Mr Finlay discovered the comet which bears his name; and altogether observations of five comets were made by him on 123 nights during the year, including observation on 32 nights of Winnecke's periodic comet which had escaped detection in the northern hemisphere. In the same year I took part, with Colonel Morris, in measurement of the base line near Port Elizabeth.

During 1886 also signals were exchanged with Captain Morris at Umtata on six nights and at Berlin (C.C.) on four nights for determination of the longitudes of these stations in connection with the Geodetic Survey. The longitude of Dryhartz in British Bechuanaland was also determined by exchange of signals with Lieutenant Laffan on five nights, in order to fix the origin of his then detached base line and triangulation in that neighbourhood.

The year 1887 was a very eventful one for the Cape Observatory. During the first six months of the year **1887.**

* A copy of my official letter of application for this instrument will be found at p. 126 of the present work.

Digitized by Google

I was absent from the Observatory for the purposes of inspecting the new heliometer at Hamburg, attending the Astrographic Congress at Paris, and passing some Observatory publications through press. My first visit was to Hamburg, where I was delighted with the beauty of workmanship and design of the new heliometer. In a few minor particulars small alterations were desirable, and Messrs Repsold made them to my entire satisfaction, so that, when I inspected the instrument after the Congress, there was nothing to be done but to pack it up for shipment. It reached the Cape by the steamer in which I returned from England. It was erected without difficulty or delay, and, at the time of its erection, was certainly the most powerful and convenient instrument for refined micrometric research in existence. Regular experimental observations with the instrument were begun without delay.

The Astrographic Congress was attended by fifty-six astronomers from all parts of the world. At its conclusion a permanent committee was appointed by ballot to carry out the work, and I had the honour of being elected its senior member by receipt of the largest number of votes in the ballot.

A short account of the origin of the Congress and of the resolutions arrived at will be found at page cxxxi.

During my visit to England in this year the following works were passed through press: "Meridian Observations made during 1882, 1883, and 1884"; "Occultations of Stars by the Moon observed in the years 1835 to 1880," compared with Hansen's "Tables of the Moon" (*Cape Annals*, vol. i. part 4); "The Variations of the Instrumental Adjustments of the Cape Transit-Circle" (*Cape Annals*, vol. ii. part 2).

The comet Barnard-Henry was picked up on the morning of 29th April by Mr Finlay whilst sweeping for comets, and he obtained on that, and three other days, the only existing series of post-perihelion observations of that object. The remarkable comet 1887 I., which had no defined nucleus, was observed on five nights, and its orbit was computed by Mr Finlay (*Monthly Notices, R.A.S.*, vol. xlvii. p. 304).

1888. In the previous year a fixed steam-engine of 10-horse power that could be connected at will with a force pump had been erected; this pump was connected with mains and storage tanks to supply means for fire extinction. To this equipment a dynamo and set of accumulators was supplied in 1888 for the electric illumination of all the instruments of the Observatory. The progress of work with the heliometer had been at first much hindered by frequent failure of the batteries employed for its electric illumination; but after the installation of regularly charged accumulators no further trouble was encountered, and electric illumination was extended, with great advantage, to all the detached instruments of the Observatory and also to the main building, including the houses of H.M. Astronomer and the Chief Assistant, the library, computing room, and transit circle.

In February 1888 I began the regular researches on stellar parallax with the new heliometer, of which accounts will be found at pp. lxii–lxviii.

During the meeting of the Paris Astrographic Congress in 1887 I had made preliminary arrangements with Dr Elkin for observations of the minor planet *Iris* during its opposition in the months of October, November, and December 1888. The observations were to be made simultaneously at both Observatories, near the time when the planet is in a plane passing vertically through both Observatories and the centre of the earth. In other words, the angles between *Iris* and two stars (one above and one below the planet) were to be observed nearly simultaneously at both Observatories, viz., in the early mornings at the Cape when the planet is two hours west of the meridian, and in the evening at Yale when it is four hours east of the meridian. As the difference of longitude is 6^h, the observations become practically simultaneous. Dr Bruns afterwards joined in the scheme with the Leipzig heliometer, and a few observations were made with the Radcliffe heliometer at Oxford. Observations were obtained at the Cape on forty-four mornings between 10th October and 13th December. A short account of the observations and their result will be found at p. lxxi, and full details in the *Cape Annals*, vols. vi. and vii. I also commenced the laborious operation of determining the division errors of the heliometer in this year.

In the early morning of 18th February the comet which bears his name was discovered by Mr Henry Sawerthal whilst he was engaged in exposing plates in connection with the Southern *Durchmusterung*. The Warner prize of £100 was awarded to Mr Sawerthal for his discovery.

H.M. Treasury having sanctioned the construction of the Astrographic telescope (described at pp. 120–121 of the present work), it was duly ordered from Sir Howard Grubb. The details of its design had been discussed and agreed to with Sir Howard Grubb after the Congress.

The 10-foot iron bar (Cape Standard A) which had been employed by Sir Thomas Maclear in the year 1841 as his standard in the measurement of the Zwartland base line, had been sent to Messrs Troughton and Simms to have new terminal lines cut upon the inlaid gold surfaces in the neutral axis of the bar on which the original terminal dots had been engraved. The bar was then sent to the International Bureau of Weights and Measures at Sèvres, and, towards the end of the year 1886, its constants were very carefully determined there (*Geodetic Survey of South Africa*, vol. v. pp. 1–18). At the same time two Tonnelot thermometers were supplied, of which the errors

Digitized by Google

were accurately determined at the International Bureau (*loc. cit.*, pp. 19–26). I had designed a Comparateur (described *loc. cit.* pp. 42–45), for determining the constants of the base measuring bars. The apparatus was constructed to my working drawings by Troughton and Simms, and it was erected in the S.E. room of the Cape Observatory in the end of the year 1887. During the year 1888 the field work of the Geodetic Survey was suspended, and Major Morris was engaged at the Observatory in determining his personal equation, the reduction of his field operations, and in comparing the five base measuring bars with the Cape Standard A; the details of this comparison will be found, *loc. cit.*, pp. (46)–(55).

During September and October of the same year, we had the great pleasure of a visit from the late Miss Agnes Clerke, so well known to astronomers by her *History of Astronomy in the Nineteenth Century*. Besides carefully studying the practical working of the Observatory, she made some original observations on the spectra of Southern stars.

During the whole of the year 1889, the heliometer was in constant use, in continuing the programme of observations for stellar parallax which had been begun in 1888 and in the observations of the minor planets, *Victoria* and *Sappho*, made to determine the solar parallax. The latter observations were begun on the 10th June and continued almost without break, night and morning, until the 18th October. Short accounts of these operations and their results are given in pp. lxxii to lxxvi; the full details are published in vols. vi. and vii. of the *Cape Annals*. One very noteworthy and delightful feature connected with these researches was the enthusiasm and goodwill with which astronomers in all parts of Europe and America responded to and took part in the programme of observation. Above all, it brought us a visit from Professor Auwers of Berlin, who, under the circumstances described at p. lxxii, became our guest from the 24th May until the 5th September, and took a full share with me in the work of the *Victoria* observations. We all look back upon that visit with the greatest pleasure and interest. I owe to him a debt of gratitude for the self-sacrifice, scientific devotion, and friendship which prompted it, and which I fear can never be adequately repaid. 1889.

On account of the strain on my eyesight which these numerous observations involved, I found it necessary to suspend the observations for division error of the heliometer scales from the end of February until the beginning of November.

During the period of the *Victoria* and *Sappho* observations, Mr Finlay, who had shared with me the heliometer observations of *Iris* in 1889, was engaged during August, September, and October of 1886 in exchanging signals with Commander Pullen, R.N., for the purpose of determining a series of longitudes on the West Coast of Africa. That capable and zealous officer had volunteered for this service upon quitting (on promotion) the command of H.M. Surveying Ship "Stork"; and Mr Finlay, from his previous experience in like work on the East Coast of Africa (p. clxiii), was selected as the co-operating observer at the Cape. Commander Pullen worked at the Observatory from 10th June till 31st July to acquire familiarity with the use of the Altazimuth, and to ascertain his personal equation relative to that of Mr Finlay both in time determinations and the observation of mirror signals.* At that time it was considered undesirable, from fear that lightning might destroy the insulation of the cable, to connect submarine cables with land lines. Accordingly an excellent sidereal clock was set up in the Cable Office, Cape Town, and this was compared with the Observatory transit clock by the intervention of a mean time chronometer, carried by Mr Finlay (two miles by railway and about half a mile on foot), and compared with both clocks both before and after signals. On account of pressure of other work on the cable, four or five hours had sometimes to elapse between the two comparisons; and yet there is no single instance in which a discordance between the first and second comparisons amounting to one-tenth of a second can be traced, so that even if another astronomer had been available (which was not the case at the time) to compare the Cape Town and Observatory clocks by telegraph signals, no practical gain in accuracy would have resulted. Although signals were exchanged and time determinations made at the Cape Observatory nearly every night, only a small portion of these could be utilised for longitude purposes on account of the cloudy weather prevailing on the West Coast, so that the operations became very trying and laborious in proportion to the number of results obtained. Commander Pullen was seized on 27th September with malarial fever on the day of his arrival at Bonny, but recovered so far as to make time observations and exchange signals on 29th September, and died at his post on 3rd November. He was honoured and beloved by every member of the Observatory staff, and his loss cast a gloom over our little community.

The Observatory and dome for the Astrographic Observatory (described p. 122) were built and erected in the course of this year.

* Commander Pullen attained great skill in the use of the Altazimuth. His probable error from a time determination at stations near the Equator, from observed altitudes of two stars, one East and the other West of the Meridian, turned out to be less than $\pm 0^s.03$.

Digitized by Google

1890. In 1890 there was completed a series of zenith telescope observations (Talcott's method), begun in 1887, on 414 pairs of stars, uniformly distributed over the heavens, and so selected that in each pair the times of upper (or lower) culmination of the two stars differ only a few minutes of time, and the difference of their opposite zenith distance does not exceed 10′ of arc. The range of zenith distance is from 2° to 80°. Each pair has been observed on at least six nights. All these stars are included in the list of the *Cape Ten-Year Catalogue for 1890*, and will therefore be connected by meridian observations with all stars to the 5th Magnitude South of the Equator, and with all stars in *Auwers' Fundamental Zone* lists, and all stars in the British and American *Nautical Almanacs*, the *Connaissance des Temps*, and the *Berliner Jahrbuch* of that epoch, which culminated within 80° Z.D. of the Cape. This series of observations was made partly for control on the law of flexure of the transit circle and for connection of northern and southern systems of declination, and partly for the use in connection with the Altazimuth observations for determination of latitude by Kapteyn's method (see p. xliv). Pressure of work has prevented the final discussion and publication of this series of zenith telescope observations, but it should not be lost sight of when the time comes for discussion of a fundamental system of declination in connection with the results of the new transit circle.

The observations for determining the division errors of the heliometer scales were suspended in February of last year, because I found that, when observing every evening and every early morning, I could not expose my eyes to the additional strain of making observations for division errors by day. This laborious and tedious work was resumed after the *Victoria* and *Sappho* observations of 1889, and was continued without intermission till its conclusion in February 1900; this research depends upon 50,000 observations, and determines the individual error of each of the 200 divisions of each scale with a probable error of less than $\pm 0''\cdot 01$. An account of the operation is given in the *Cape Annals*, vol. vii. pp. 29–42.

In February and March of this year, farther heliometer observations of zones of stars were made with a view to determine whether, in converting observed distances into arc, it is necessary to introduce a term depending on the square of the distance, and, so far as the investigation could be carried, no such term appeared to be required. From April to November the important work of the heliometer triangulation of the *Victoria* comparison stars was carried out between 12th April and 14th November, the objects of which are described at p. lxxiii and of which a complete account is given in the *Cape Annals*, vol. vi. The new astrographic equatorial, by Sir Howard Grubb (described p. 120), reached the Cape on 12th June, and was erected and adjusted by 21st June. A complete series of overlapping plates (constituting a photographic survey of the *Iris*, *Victoria*, and *Sappho* comparison stars) was taken with the astrographic telescope; but their definition was not satisfactory, owing to a then existing fault in the curvature of the outer surface of the crown lens, and the plates were not utilised in the discussion of the definitive places of the comparison stars.

On the 18th January 1890 the U.S.S. "Pensacola," with the American eclipse party under Professor Todd, visited the Cape. Mr Preston of the United States Coast Survey and Cadet Patton of the U.S. Navy made a complete series of pendulum and magnetic observations. Professor Cleveland Abbe carried out various meteorological investigations at the Observatory. Every facility was given to the Observatory staff by Professor Todd and by every member of his party to examine and, in some cases, to test their fine collection of astronomical instruments. This visit is still associated with many very pleasant memories on part of the older members of the Cape staff. Mr Harold Jacoby, Assistant at the Columbia College Observatory and also a member of the Pensacola eclipse party, elected to remain at the Cape Observatory and study the practical working of the heliometer. Mr Jacoby's services were of great value not only as an observer but as an excellent computer (see p. lxxiii). He remained at the Cape till 6th August, and found his reward in making the acquaintance of the lady, Miss Annie Maclear (daughter of Mr George Maclear, and granddaughter of Sir Thomas Maclear), who is now his wife.

Partial effect was given in this year by the Admiralty to my recommendations with reference to a more adequate supply of computers. A sum of £100 was offered by Miss Bruce, through Professor Pickering, and was gratefully accepted. This helped very materially the forwarding of the reduction of the great mass of heliometer observations until more adequate provision for the purpose was officially made.

1891. In February 1891 I went to Europe to attend the réunion of the Permanent Committee of the Astrographic Congress of that year, and advantage was taken of the opportunity to return the object-glass of the astrographic telescope for alteration to Sir Howard Grubb (see p. cxxxii). After completion in 1890 of the first series of zenith telescope observations, the instrument was dismounted and overhauled. Its definition was greatly improved by a new axis-prism; a new level box with two levels instead of one and a new self-recording micrometer were added by Repsolds in preparation for a series of observations to determine the constant of aberration.

Digitized by Google

On my return from England I at once commenced a series of heliometer observations of the mutual distances and position angles of Jupiter's Satellites for the purpose of determining the mass of Jupiter and such elements of the orbits of the Satellites as were essential for that purpose. The series extended from 1891 August 17 to December 14, with observations by myself on thirty-five and by Mr Finlay on eleven nights. An account of these observations and the results of their subsequent reduction by Dr W. de Sitter will be found at pp. lxxxiv–lxxxvii.

The inadequacy of the computing force for the past ten years had led to large and growing arrears of reduction **1892.** which no efforts on part of the existing staff could overtake. Some addition having been granted, it appeared to me that the time had arrived to make a supreme effort to overtake these arrears. Accordingly, all meridian observing not absolutely required was suspended during 1892, so that much additional time could be given to the work of reduction, and much progress was made.

I devoted twenty-four nights to completing my series of heliometer observations for stellar parallax, and began a course of zenith telescope observations for determination of the constant of aberration. The season 1892 was abnormally damp and cloudy. Many preliminary experiments had to be made before all practical details connected with the plans of the Astrographic Congress could be satisfactorily worked out, but regular work with the re-polished object-glass of the astrographic telescope was begun on 26th July.

The results of Dr Auwers' invaluable discussion of the great mass of meridian observations of the comparison stars had been received, as also the heliometer observations made at the various co-operating Observatories. It thus became possible, in the first place, to make a definitive reduction of the places of the *Victoria* comparison stars from the combined heliometer and meridian observations which yielded co-ordinates having probable errors of about $\pm 0''\cdot 03$. A preliminary reduction of observations of *Victoria* showed that for the first time in the history of astronomy the *absolute* path of a planet for a period of nearly three complete revolutions of our Moon had been observed with greater precision at every point of its path than had even the *differential* parallactic ellipse of any fixed star.* At the same time it was shown that, to obtain a definitive determination of the lunar equation from the observations, a recomputation of the tabular distances and position angles would be required, based on new heliocentric ephemerides of the Earth and *Victoria*; also, in order to respond to the accuracy of the observations, it would be necessary to perform all the computations of the ephemeris of *Victoria* with 8-figure instead of 7-figure logarithms, and that the lunar perturbations in the apparent place of *Victoria*, instead of being taken from Le Verrier's Tables, must be rigorously computed from the co-ordinates of the Moon.

Professor Kapteyn reported that the last plate of the *Cape Photographic Durchmusterung* had been measured **1893.** and that the first sheets of the Catalogue would be ready for press in 1893.

The field work of the Geodetic Survey of Cape Colony and Natal was completed on 1892 September 30, and Major Morris took up residence as my guest at the Observatory to complete the reductions with the aid of Mr Robinson and Mr Pillans, members of his staff.

Mr George Maclear was, through severe illness, unfit for duty from April 1892, and he retired on pension in June 1893. Two other members of the staff were seriously ill during this year, and Mr Cox was absent for six months in England on well-earned leave of absence. Undesirable as it is in the interests of astronomy and the healthy conduct of an Observatory to suspend the continuity of its observations, it seemed to me necessary, under all the circumstances, to continue the policy of the previous year, viz., to give up all meridian observing not absolutely required for immediate purposes, and to continue efforts to overtake arrears of reduction. Dr Tietjen of the office of the *Berliner Jahrbuch* having kindly supplied the necessary new ephemeris of *Victoria*, computed with 8-figure logarithms, the heliometer observations of *Victoria* were definitively reduced with the results given at pp. lxxiii and lxxxii. The observations responded in a remarkable way to every refinement of reduction. The reduction of the observations of *Sappho* was also completed in 1893, and resulted in a value for the solar parallax differing only $0''\cdot 003$ from that derived from the observations of *Victoria*. Soon afterwards Dr Elkin communicated the results of discussion of the *Sappho* observations (p. lxxii).

The three admirably accordant results for the solar parallax were :—

	Solar Parallax.	Probable Error.
From Observations of *Iris*	$8''\cdot 8120$	$\pm 0''\cdot 0090$
,, ,, of *Victoria*	$\cdot 8013$	$\pm 0\cdot 0061$
,, ,, of *Sappho*	$\cdot 7981$	$\pm 0\cdot 0114$

In 1893 Professor Kapteyn reported that the first of the three volumes of the *Cape Photographic Durchmusterung*, containing places and magnitudes of 135,000 stars, was ready for press.

* That this accuracy was ultimately attained will be best realised by reference to the residuals "O—C" on page lxxxii.

Digitized by Google

In September 1893 Colonel Morris completed the computations of the Geodetic Survey and left for England; his departure made quite a blank in our family circle. It remained for me to write the Introduction and put the work in form and pass it through press as Volume I. of the *Geodetic Survey of South Africa.*

1894. Meridian observations were resumed in 1894, but were restricted to those absolutely necessary for completing the observing list of stars to be contained in the General Catalogue for 1890. Observations of the Sun, Mercury, and Venus were not resumed. I regretted the necessity for this policy; but the post vacated by Mr Maclear's retirement had not been filled, and there had been farther illness in the staff; there remained for me only the choice of adding to the already large stock of unreduced and undiscussed observations, or of limiting the work in some way till an adequate staff was provided.

The year 1894 is memorable in the history of the Cape Observatory chiefly by Mr Frank M'Clean's offer of a great telescope and spectroscope with buildings and dome complete, and by the acceptance of this noble gift by the Admiralty. The official correspondence connected with this offer and its acceptance is given at pp. 1–3 of the present work.

An interesting variable star was discovered by Mr C. Ray Woods in the constellation Vela from a comparison of plates taken on 1893 March 18 and 1894 January 20; it proved to be of the Algol type, having a period of $5^d\ 22^h\ 24^m\ 4^s$. A large number of plates were taken to determine its light curve. The *Cape General Catalogue of Stars 1885·0* was passed through press in 1894, as also the *Meridian Observations 1885–87.* Professor Harold Jacoby of Columbia College, New York, paid a second visit to the Observatory in 1894.

1895. On 1895 February 20 the post of second-class Assistant, vacated by the retirement of Mr G. Maclear in 1893, was filled by the promotion of Mr Cox to be second-class Assistant; Mr J. Power was appointed Junior Assistant. Great progress was made in overtaking the arrears of reduction and publication during this year, and a very large amount of my own time was occupied in the preparation of original sketches and designs connected with the construction of the new telescope and its Observatory and in correspondence with Mr Frank M'Clean and Sir Howard Grubb.

1896. I was absent on leave from 1st April to 1st December. During this visit to Europe I attended the meeting of the Permanent Committee of the Astrographic Congress held at Paris in May of that year. I also represented the Observatories of the Southern Hemisphere at the Congress of Directors of National Ephemerides, held at Paris in the same month, to decide the question of adopting a uniform catalogue of fundamental stars and uniform constants in the National Ephemerides. It was very gratifying to find that the definitive values of the astronomical constants determined by the heliometer observations of *Iris*, *Victoria*, and *Sappho* * were those recommended by the Conference for use, and which have since been adopted for use, in the National Ephemerides, viz. :—

	From Heliometer Observations.	Recommended by the Conference.
Mean Solar Parallax	$8''\cdot802\pm0''\cdot005$	$8''\cdot80$
The Constant of Nutation . . .	$9''\cdot207\pm0''\cdot003$ (a)	$9''\cdot21$
The Constant of Aberration . . .	$20''\cdot473\pm0''\cdot012$ (b)†	$20''\cdot47$
Mass of the Moon	$1\div81\cdot702\pm0\cdot094$	...

(a) Derived from the constant of precession and mass of the Moon.

(b) Derived from the solar parallax and the Newcomb-Michelson velocity of light.

The same year, at the request of Mr Chamberlain, I went on a mission to Berlin to endeavour to effect an agreement with Germany on the delimitation of the boundary between British Bechuanaland and German South West Africa, and a provisional agreement was drawn up for submission to both Governments. The origin of the mission and its results are described at pp. civ and cv. For this service I received the thanks of the Foreign Office.

Whilst in London I reported officially to the Admiralty on the long-standing needs of the Cape Observatory in regard to an increase of staff and the supply of a reversible meridian circle, mounted in a proper detached and properly ventilated Observatory, suitable for refined fundamental determinations. The Lords Commissioners of the Admiralty and of H.M. Treasury favourably considered the proposals, and provision was made for giving effect to them in the Navy estimates for the financial year 1897–98.‡

Mr R. T. A. Innes, who joined the Observatory staff on the 1st January, applied the 7-inch equatorial to a search for new double stars, and discovered no less than 104 of them, of which 45 are of distance $0''\cdot6$ to $1''\cdot0$, 31 of $1''$ to $2''$, 7 have very faint comparisons exceeding $5''$ distance, the remainder being within the limits of $2''$ to $5''$.

* An advance proof of the results had been placed in the hands of the Commissioners before the Congress.

† Printed in mistake $20''\cdot467$, *Cape Annals*, vol. i. p. 24, part 6.

‡ The reader will find a statement of the various stages of the establishment in Appendix III.

Digitized by Google

The 36-foot dome of the new M'Clean Observatory, made by T. Cooke & Sons of York, was erected in course of the year by one of the foremen of the firm (Mr Selby), who was sent out for the purpose. It proved to be a thoroughly satisfactory piece of work, excellent in design as well as in workmanship, and easy and convenient in use.

I visited Dublin in November, to find that unexpected delay had occurred in completion of the telescope. The rising floor with its hydraulic machinery reached the Cape in October. Its erection was completed early the following year.

In 1897 the two volumes, *Cape Annals*, vols. vi. and vii., containing all details connected with the "Determination of the Solar Parallax and Mass of the Moon," was published and circulated. The second volume of the *Cape Photographic Durchmusterung* was passed through press by Professor Kapteyn. 1897.

Mr Innes did a great deal of valuable work in connection with his revision of the *C.P.D.* In course of this work, and partly as the result of special search, Mr Innes discovered 128 previously unrecorded double stars during 1898.

In this year was set on foot the series of regular heliometer observations for determining, if possible with higher accuracy, the positions of the major planets, and these observations have been continued up to the present time.

The series of observations, made by Mr Finlay and myself with the zenith telescope 1892–94, to afford a determination of the constant of aberration, was reduced and discussed in 1897; a preliminary note prepared by Mr Finlay is published in the *Monthly Notices, R.A.S.*, vol. lviii. p. 34. The results were not entirely satisfactory. The weak point was apparently the quality of the levels, which gave occasional signs of "sticking." The probable error of a single determination of a single latitude from one pair of stars was $\pm 0''\cdot 168$, and the final result for the value of the aberration constant $20''\cdot 57$ with the *p.e.* $\pm 0''\cdot 01$. The origin of this abnormally large value of the constant may be either some systematic error produced by defects in the levels, or some small meteorological effect which renders the refraction unsymmetrical with respect to the zenith by a variable amount that systematically affects the value of the aberration. There are apparently similar sources of systematic error in other series of investigation on the aberration constant.

To myself and every member of the staff one of the most interesting events of the year 1897 was the visit paid to the Observatory by Mr Frank M'Clean, to which reference is made at p. xliii. There was but one regret to record in connection with this visit, viz., that the telescope which the Observatory owes to his liberality did not arrive from Dublin before he left the Cape, and that Mr M'Clean was thus deprived of the pleasure of witnessing its erection. The hopes and expectations of every member of the staff were that Mr M'Clean would soon revisit the Observatory and see the working of the splendid instrument which he had presented. But, alas! this was not to be. His health soon afterwards began to fail, and he died on the 8th November 1904.

Mr (now Professor) de Sitter came to the Observatory in 1897 August 27 to study practical astronomy. He rendered very valuable services to the Observatory during his stay of over two years at the Cape. The circumstances of his coming are described at p. lxxxvii.

The new measuring machine, which I designed for measuring the astrographic plates, reached the Cape towards the end of 1897; it is described in the *Monthly Notices, R.A.S.*, vol. lix. pp. 61–72.

During 1898 some very important changes took place in the staff and equipment of the Observatory. Mr S. S. Hough, M.A., Fellow of St John's College, Cambridge, was appointed Chief Assistant *vice* Mr W. H. Finlay, who retired on account of bad health on 28th August (see also p. clxiv). Mr Hough entered in residence at the Observatory 24th October. A skilled optical fitter, Mr T. Miller, was also added to the staff of the Observatory. The Admiralty also approved of my proposals for the erection of a physical laboratory attached to the M'Clean Observatory, and of a new record room providing suitable accommodation for the measurement and preservation of astrographic photographs. 1898.

The equatorial mounting and the object-glasses of the M'Clean telescope, packed in forty-four cases, reached Table Bay on 11th April. When the cases reached the Observatory the contents were found in perfect order. The work of erection was at once commenced with the aid of Cape workmen, under my constant supervision, and in six weeks all the parts were mounted and adjusted. The most troublesome part of the work, however, remained to be done, as Sir Howard Grubb had only erected the stand in the open air and no trials of the instrument in work had been made.

It is unnecessary here to enter into details of all the deficiencies of the stand as it was originally sent out. Mr M'Clean most generously authorised the carrying out of all necessary alterations. The requisite iron castings and stays were designed, made and fitted at the Cape, and now the stand is in every respect most steady, satisfactory, and convenient (see pp. 10 and 11).

Digitized by Google

The electric lighting of the circles, micrometers, etc., with the switches, rheostats, and fuses, had to be made or remodelled at the Cape.

The hydraulic motor for rotating the dome, with its reversing gear and valves, arrived on 4th July, the hydraulic ram and valves for automatic clock-winding on 11th October, and by 1st November the whole of the essentials of the Observatory and stand were fitted and in working order. Thus the raising or lowering of the floor and the rotation of the dome are commanded by cords, which can be operated by the observer at the eye-piece of the telescope with the utmost ease and delicacy, whilst the hydraulic gear automatically winds the clock at short intervals, without communicating the slightest vibration to the telescope. All the hydraulic gear was made by the Glenfield Company of Kilmarnock.

The 18-inch visual object-glass proved to be a very fine one, both the spherical and chromatic corrections being practically perfect as far as the flint and crown glass which are at present procurable in discs of that size will allow.

The 24-inch photographic object-glass, unfortunately, has two faults—the marginal images showed decided coma, and its minimum focus, instead of being for light of the refrangibility of Hγ (or, if anything on the violet side of Hγ), is for rays about midway between Hβ and Hγ. Sir Howard Grubb stated that he would willingly remedy these defects.

The slit spectroscope, for line-of-sight-work, made by the Cambridge Instrument Company, was shipped from London on the 21st December. The 24-inch object-glass could not be conveniently returned to Sir Howard Grubb until tests have been made with this spectroscope as to the position of the slit in relation to the focal point of the object-glass; because, from the construction of the spectroscope and the method of its attachment to the telescope, only a limited range of focal adjustment is possible.

During the year Mr Innes discovered fifty-three double stars not previously catalogued.

The provisional arrangement for delimitation of the Anglo-German boundary between British Bechuanaland and German South West Africa, which had been submitted in 1896 by Baron von Danckelmann (the Geographical expert attached to the Berlin Foreign Office) and myself, was finally approved on the 1st January 1898 by both Governments concerned, and the direction of the Survey was put into my hands (pp. civ and cv). Various minor longitude operations were carried out.

1899. The new physical laboratory and the record room were completed for use in July 1899; the latter provides suitable accommodation for the measurement and preservation of astrographic photographs, and both buildings have proved to be admirably adapted for their purposes. A chronograph room was also built near the site of the new transit circle.

The 24-inch object-glass of the M'Clean equatorial was returned to Dublin on the 31st October 1899, at the request of Sir Howard Grubb, for rectification of faults in the marginal images and in the general chromatic correction.

The *Cape General Catalogue of 3007 Stars for 1890*, with appendices, was distributed, and the *Cape Catalogue of 1905 Stars for the Equinox 1865*, based on the *Cape Meridian Observations 1860 to 1870*, was passed through press. The latter work completes the arrears of publication of the Cape meridian observations. A list of 893 occultations observed at the Cape between 1881 and 1898 was, at the request of Monsieur C. André, published in the *Astronomische Nachrichten*, Nos. 3599–60. Mr Innes' Catalogue of Southern Double Stars (*Cape Annals*, vol. ii., part 2) was passed through press. Much time was given to investigations with the M'Clean telescope and spectroscope on the systematic errors to which measures of velocity in the line of sight are liable.

Mr de Sitter completed the series of observations with the Zollner photometer for the purpose of determining the relation between the visual and photographic magnitudes of stars in different gallactic latitudes (see *Groningen Publications*, No. 12), and he sailed for Holland on 6th December. During his stay of over two years he had done very valuable work, especially in aiding in the reduction of the observations for stellar parallax and in the reduction of heliometer observations of *Jupiter's* Satellites (see p. lxxxvii). A series of seventy-eight photographic plates, with six exposures on each, of the minor planet *Iris* (from 1899 July 11 until the middle of January 1900) was taken, with the view of utilising the measurement of the plates, in combination with meridian observations of a number of comparison stars, to make a determination of the mass of the Moon. But the discovery of the minor planet *Eros*, its subsequent extensive observation at many different Observatories, and the much larger coefficients which *Eros* offered in consequence of its near approach to the Earth, seemed to render it undesirable to expend the large amount of labour that would have been necessary to complete such a determination, seeing that the materials for a far more powerful one were available.

Two of our computers, the optical fitter, and the carpenter, who were all members of the Cape Volunteer

Digitized by Google

Artillery, were called out for active service at the seat of war; the work of the Observatory necessarily suffered by their absence.

On 8th April 1900 I visited Europe on leave, Mr Hough remaining in charge until my return on 20th November. I had many objects in view during this visit, viz., to inspect the new transit circle, then nearly completed, in the workshops of Messrs Troughton and Simms; to attend the meetings of the Permanent Committee of the Astrographic Congress and of the International Geodetic Association which were held at Paris in July and September respectively; and to be present, as a delegate of Cape Colony, at the meetings held at Burlington House for organisation of the International Catalogue of Scientific Literature. I was also much occupied in promoting matters in connection with the great African Geodetic Arc of Meridian. 1900.

The material for the steel Observatory of the new transit circle reached the Cape in April, and its erection was completed in December. A description of the Observatory is given at page 41 of the present work. The transit circle was ready for preparatory inspection in May. Mr Simms took the utmost care in carrying out suggested alterations and improvements made by me from time to time, and the instrument was finally passed in October as ready to be dismounted and packed for shipment. The third and last volume of the *Cape Photographic Durchmusterung* (*Cape Annals*, vol. v.), having been passed through press by Professor Kapteyn, it was distributed in 1900. This brought to conclusion the great work to which Kapteyn had consecrated over twelve of the best years of his life. An account of the history of its inception and manner of execution is given at pp. xlviii to lviii.

Vol. viii., part 2, of the *Cape Annals*, containing the results of "Heliometer Investigations on the Parallaxes of the principal fixed Stars of the Southern Hemisphere," was also passed through press in this year (see also pp. lx to lxviii).

The 24-inch object-glass of the M'Clean telescope being in Dublin for alteration, the 18-inch visual telescope, with the Repsold micrometer attached to it, was devoted to the measurement of double stars, of which 228 were made by Mr Lunt and 588 by Mr Innes. The stars selected for measurement have been, as a rule, pairs which were never before measured, or which have not been observed since Herschel's expedition to the Cape in 1835; of these, seventy pairs are under 1″ distance and fifty-six between 1″ and 2″, and the series includes a number of observations of *α Centauri* as a double star.

The machine for measuring astrographic plates which I devised gave such complete satisfaction that a second one of the same description was ordered from Messrs Repsold and brought into use early in 1900. In the physical laboratory, Mr Lunt was much occupied with investigations on the spectra of oxygen, silicon, aluminium, boron, and sulphur.

The 24-inch objective of the M'Clean telescope, which was sent to Sir Howard Grubb for correction in 1899 October 31, was received on 1901 February 16. It was tested with varying separation of the lenses until 18th April, when it was finally adjusted and accepted. This completion of M'Clean's munificent gift was marked by the uncovering of the Inscription Stone by His Excellency the Governor (The Hon. Sir Walter Hely Hutchinson) on 19th September. An account of the ceremony will be found at page 3 of the present work. The somewhat yellow colour of the three prisms in the line-of-sight spectroscope produced an undue absorption of light in the region between Hβ and Hδ, and Mr M'Clean, with his wonted generosity, provided for a new battery of four prisms of very transparent glass giving together rather less dispersion and the same deviation as the three prisms of very heavy glass. In consequence of a cable message from the Cambridge Instrument Company to the effect that the new prisms, by Hilger, were ready, the spectroscope was shipped to Cambridge on 18th April—unfortunately a few days before the appearance of the great comet. The objective prism was employed by Mr Lunt with the Victoria telescope in photographing faint stars having peculiar spectra and for visual searching for star-like nebula—of which two were found by Mr Lunt. A number of long-exposure photographs of remarkable objects were also made by him. 1901.

The iron bed-plate of the new transit circle reached the Observatory in March, the piers and remainder of the instrument, except the collimators, in April of this year. No difficulty was experienced in erection and adjustment, but a great deal of time was given to experimental work in connection with insulation of the piers from heat and in improving the methods of illuminating the microscopes, etc. The most serious difficulties encountered were in connection with the installation of the meridian marks, in consequence of the geological conditions of the site. Rock-drill borings showed that the solid quartzite rock of the Malmesbury beds (underlying the whole S.E. corner of Africa) lies at the site of the transit circle at a depth varying from 16 to 30 feet below the surface—the rock being more or less weathered down to these depths. It is evident that if the lenses and marks were erected on piers founded at such depths there would be great risk of changes in the piers themselves, apart entirely from the fact that a small angular tilt in the foundations of such height would produce a considerable linear displacement of the lens or mark.

Digitized by Google

Accordingly I devised a plan by which the positions of marks attached to the solid rock can be transferred vertically above ground level, or, rather, by which the lens or mark can be instantaneously adjusted vertically over the referring mark attached to the solid rock below. These conditions and the means by which the difficulties they created were overcome are fully described at pp. 38 and 47 of the present work.

Mr Innes made a large number of measures of double stars with the Repsold micrometer applied to the 18-inch refractor, and Mr Lunt was engaged in an elaborate investigation of the spectrum of silicon with the new laboratory spectroscope by Hilger.

An admirably working plan was derived and carried out for opening and closing the transit circle Observatory by an electro-motor instead of the hand motion originally supplied. The *Annual Results of Meridian Observations*, made under the direction of Mr Stone, 1878–79, were printed this year: their publication completes the issue of results of all the work done under his direction.

The heliometer which had been in constant use since 1887 was dismounted in March 1901 and completely taken to pieces. Its various parts were repainted, repolished, lacquered, etc., all defects made good, and some convenient changes in the way of new switches and carbon resistances for regulation of the illumination were introduced. The work occupied three and a half months, and was admirably done by Mr Miller, the optical fitter attached to the Observatory, who had just returned from service at the front.

Between 1901 June 24 and September 27, Mr Bryan Cookson made heliometer measures on thirty-eight nights of the mutual distances and position angles of *Jupiter's* Satellites on the same plan as that of my observations in 1891, and considerable progress in their reduction was made in course of the year.

1902. Although my original plan was to line the pits for the under-ground azimuth marks of the transit circle with cast iron, the Admiralty Director of Works advised that an attempt should in the first place be made to exclude water by brick and cement. The plan was tried for two of the pits, but it completely failed; and, after considerable delay, the plan of lining all the shafts with coal iron cylinders was sanctioned. The solid cast-iron flanged tubes (which form the bottom of the iron lining) were received at the end of 1902, and were embedded in the solid rock.

The investigations of the errors of all the micrometer screws and of the pivots of the transit circle were completed in 1902 (see pp. 60 and 66).

Parts 1, 2, and 3 of vol. ix. of the *Cape Annals*, containing his revision of the *Cape Photographic Durchmusterung*, was passed by Mr Innes through press during his leave of absence in England.

Vol. x., part 1, of the *Cape Annals*, containing his investigations on the spectra of silicon and oxygen, was passed by Mr Lunt through press during his stay in England.

Many spectra of stars from 3·5 to 5·5 magnitude were photographed during the year with the 24-inch objective and Grubb objective prism of the Victoria telescope, and a number of successful photographs of interesting objects were secured without the prism. With the 18-inch visual objective of the Victoria telescope Mr Innes made 384 complete sets of measures (distance and position angle) on 239 pairs of double stars; the measured pairs include 27 stars which had not been previously catalogued as double. Mr Innes also discovered two new variable stars, viz., C.D.M. $-42°\cdot825$, period 260 days, and C.Z. 3^h No. 721, period 95 days.

Mr Power gave considerable time to the investigation of questions raised by Dr Ristenpart in connection with possible errata in the Cape Catalogues for 1840 and 1850. These were all carefully dealt with by him, and the whole of these manuscripts were collected, arranged, and bound.

Mr Bryan Cookson at the opposition of 1902 continued his observations of the relative position angles and distances of *Jupiter's* Satellites; he obtained 570 observations on forty-eight nights. He also completed the reduction and discussion of the whole of the observations of a similar series made in 1901. Astrographic plates of *Jupiter's* Satellites were taken for the same purposes as the heliometer measures (see p. xcii). The work of measuring the catalogue plates has been very seriously hindered by the resignation, early in the year, of five out of the six ladies previously employed on the measurement—a result due mainly to the high rates of pay given in Johannesburg. The training of a new staff cost much time.

Field operations on the Anglo-German boundary between British Bechuanaland and German S.W. Africa were suspended in May, it being absolutely necessary to give the observers rest and change of climate. The northern part of the work proved peculiarly trying and difficult and only possible of execution during certain months of the year. Major Laffan, R.E., the British Commissioner, returned from England, and sailed from Simon's Bay for Swakopmund, in H.M.S. "Pearl," on 12th December, to meet his German colleague, who went then direct from Germany. Mr Heatlie, formerly engaged on the Geodetic Survey of Rhodesia, was engaged to accompany and assist Major Laffan, so as, if possible, to complete the work during the short season that water melons are available, as the juice of this

Digitized by Google

fruit is the only source of water-supply in some of the arid districts through which the northern part of the boundary passes.

The lining with iron of the pits which give access to the azimuth marks of the transit circle was completed, so 1903.
that it became possible to build the collimator piers and the houses covering the collimator and meridian marks.* It also now became possible to determine exactly the foci of the four object-glasses required for adjusting the upper marks vertically over the underground marks.

A very large amount of work was devoted in 1903 to the investigation of the division errors of both circles of the transit circle, and Mr Hough communicated a paper to the R.A.S. on the methods employed (*Monthly Notices, R.A.S.*, vol. lxiv. p. 461). The new travelling wire eye-end for the reversible transit circle made by Repsolds (see p. 48), provided with means for bright wire illumination in a dark field, and registration of the readings of the head of the declination micrometer, arrived and was mounted. Much time was spent in preliminary experiments in this mode of observation. The spectroscope of the Victoria telescope, which had been in the hands of the Cambridge Scientific Instrument Company since May 1901, arrived at the Cape on 27th May of this year. It is now fitted with four new very transparent glass prisms, and with the very beautiful thermostatic arrangements described at pp. 26–29 of the present work. The very considerable cost of these alterations and additions was generously paid by Mr M'Clean.

In February and March Mr Innes made with the 18-inch telescope 106 measures of 108 double stars, two of which were of new pairs, the series including ten sets of measures of *α Centauri*.

During Mr Lunt's absence, Mr Goatcher measured and discussed all the lines visible in the spectra of *Canopus* and *Sirius* taken with the three-prism spectrograph. Within the limits of 4202, 4584, he finds the spectrum of *Canopus* to contain the lines of H, Fe, Ti, Sc, Ca, Mg, Ba, Sr, Y, C, V, Zr, and these elements account for all the lines visible. The spectrum of *Sirius* within the same limits shows the presence of H, Fe, Ti, Cr, Ca, Ba, Sr, Mg. He has also measured and reduced photographs of the spectra of α_1 and α_2 *Centauri*, *β Orionis*, *α Pavonis*, and *α Scorpii*.

Previous to July, the Victoria telescope was employed by Mr Goatcher in photographing star clusters and nebulæ. Between 22nd July and 7th November the instrument was dismounted for the purpose of adapting the remodelled spectroscope with its automatic temperature control and the Callendar recorder, which registers continuously the temperature of the interior of the prism box. The mounting of the numerous electric leads, the rebalancing of the telescope, the fitting and adjustment of all subsidiary apparatus and switches occupied some months. One hundred and four photographs were taken for the focussing and adjustment of the spectrograph—mainly by Newall's method. In this method one part of the slit is used, and the image of the spectrum is formed by rays passing through one half of the collimator objective and through the thinner half of the prisms; immediately afterwards another adjacent part of the slit is used and another spectrum is photographed on the same plate by rays which have passed through the other half of the collimator object-glass of the camera telescope, but it is impossible to obtain coincidence of the lines in two such photographs throughout the entire length of the spectrum. With proper adjustment the lines coincide for a certain distance and then deviate like those of a very fine vernier. In the remodelled spectroscope a screen is provided, which moves in a slide, so that it can be pushed in front of either half of the object-glass, or clear of it. This slide is worked by a rod coming outside the aluminium case, and a spring dropping into proper notches enables the observer to place the screen exactly in any one of the three requisite positions. Experience with the original spectroscope showed the necessity for this, as a perceptible systematic difference in the apparent radial velocity, amounting to several kilometres per second, was obtained from measures of lines in different parts of the spectrum. This anomaly has its origin in the different exposure required for rays passing through a greater or less thickness of glass. If the spectrum is over-exposed, the mean image of a line photographed with the full aperture would depend in greater proportion on the rays which pass through the

* A sad accident occurred in course of the final closure or rusting of the joints of the flanged tubes which line the collimator pits. Some of the joints in the pit under the north long focus lens had given great trouble by leaking. The Observatory carpenter had made up a pail of the rusting mixture (iron filings, sulphur, and sal-ammoniac) immediately before dinner; and, after dinner, descended the pit to fill up the leaking joints. All was well at two o'clock, for one of the staff delivered a message to him, to which he gave a cheery reply. Ten minutes later someone had occasion to visit the spot, and was unable to enter on account of dense sulphur fumes which filled the pit and lower room of the N. collimator house. Immediately on report to me, water spray from fire hoses was employed to wash down the fumes, but some ten minutes elapsed before rescue could be attempted. The bodies both of the carpenter and the Krooman who assisted him were found at the bottom of the upper ladder. They had obviously made a rush to escape from a sudden outbreak of fumes, had climbed up one ladder from the point where they were at work, but had become stupefied when ascending the upper ladder, and fallen to the temporary platform on which it rested. All efforts by artificial respiration failed to restore life. Subsequent experiment proved that a mixture of the same kind as that which the carpenter had prepared, if kept in bulk, would rapidly rise in temperature and in little more than an hour would reach the temperature of boiling water, when a sudden violent discharge of steam, strongly charged with sulphuretted hydrogen, takes place; and this was precisely what had occurred in the case in question. The sad occurrence threw a very heavy gloom over our little community, for both the carpenter and the Krooman were most worthy and reliable men.

Digitized by Google

half of the prism next to the base than would be the case in an under-exposed spectrum; and it is practically impossible to maintain an exact relative density between the image of the comparison spectrum and that of the star. The remedy appears to be to use for determinations of radial velocity only those lines which are in perfect coincidence when separately photographed through the thick and thin halves of the prisms. For this purpose the rule was laid down to take through both halves of the prisms a plate of the iron comparison spectrum immediately before or after any photograph intended for determination of radial velocity, and to use for the velocity determinations only the part or parts of the spectrum in which the lines in the two adjacent spectra are in perfect coincidence. The whole of the experiments and adjustments were completed on 7th November, but, in consequence of the exceptionally unfavourable weather, only twenty-two plates of spectra could be obtained on thirteen nights before the end of the year.

The most remarkable result obtained is the rapid radial velocity of *α Phœnicis*, which, in December, was receding at 105 kilometres per second from the Earth and 82 kilometres from the Sun.

The new objective prism of 24 inches aperture and $11\frac{1}{4}^{\circ}$ of refracting angle, in a new mounting (which permits its use alone or conjunctly with the Grubb prism), was received from Messrs Zeiss at the end of November, but has not yet been adapted to the telescope.

The work of the Anglo-German Boundary Survey between German S.W. Africa and British Bechuanaland was completed. Reference to the valuable services rendered by Colonel Laffan, British Commissioner, and Lieutenant Doering, the German Commissioner, will be found at p. cxxiii.

The geodetic operations in the Transvaal and Orange River Colony were actively commenced in January 1903, under the superintendence of Colonel Morris.

For the measurement of the arc of meridian from the Zambesi to Lake Tanganyika I selected Dr Tryggve Rubin, who was a member of the Swedish Russian Expedition for measurement of the Spitzbergen arc of meridian in the summer of 1901, and leader of the expedition which completed that work in the summer of 1902. After residence and work for three weeks at the Cape Observatory he sailed for Chinde on 29th April, accompanied by Dr F. O. Stoehr, M.B. (surgeon of the Expedition), and Messrs Edward Stroud and Paul Chapman as assistants. The party arrived at Chinde on 12th May, where they were detained a week in landing and reshipping their instruments for Feira. The party proceeded to Fort Jameson, where the equipment of the expedition with native carriers was completed, and it finally reached its field of operations at Feira, on the Zambesi, on 13th July.

An account of the subsequent operations will be found at pp. cv to cix.

Mr Franklin Adams arrived at the Cape on 28th July of this year. His assistant, Mr Kennedy, reached the Cape a month before him, to erect the fine photographic equatorial with a triple lens by Cooke of 10 inches' aperture and 45 inches' focal length. Mr Franklin Adams had made a series of charts of the Northern Hemisphere with this instrument. In 1902 he fell ill, and came to South Africa with the somewhat incongruous double purpose of curing the rheumatism and neuritis from which he suffered and of photographing the Southern Heavens. He occupied rooms near the Royal Observatory during one half of each month; and during the other half of the month, when moonlight would fog his long-exposure plates, he went to the Sanatorium of Caledon, about sixty miles distant from the Observatory, where he took a course of treatment at the celebrated hot chalybeate springs there. It was in vain that the doctor and his friends urged him first to complete his cure and then to do his astronomy—nothing would turn him from his purpose. He would come back from Caledon at the end of a fortnight, greatly benefited, and undo a great part of that benefit by long exposure at night, to return, as cheerily as ever, to Caledon at the end of a fortnight. At first he could not dress without assistance or walk without difficulty and pain. His condition of health slowly improved; but his enthusiasm, optimism, and mental energy told against the permanent improvement of his health and the ultimate quality of his first series of Cape Photographs. He had made a plan for doing his work which left no time for preliminary experiment, for his previous experience did not enable him to realise how numerous are the precautions, trials, and tests required to obtain perfect astronomical photographs of plates 15° square, taken with a telescope of 10 inches' aperture and so short a focus as 45 inches. The object-glass was a very fine one, the stand and clockwork practically perfect, but the mounting of the lens did not allow of its accurate "centering" and "squaring," nor were the wooden tube and plate-holder capable of the necessary precise adjustment, or of preserving the perfect parallelism of the axis of the guiding and photographic telescopes. In spite of advice, he insisted that the work must go on according to his programme before these faults could be altered. But when he returned to England, and some of the necessary changes were made, he realised the value of these improvements in a new series of photographs of the Northern Heavens, which he immediately proceeded to make.

In November 1909 he proposed to return to South Africa to rephotograph the Southern Heavens, but

Digitized by Google

recurrence of his illness defeated this plan, and he finally presented his fine instrument to the Observatory at Johannesburg, and provided an assistant to carry on the work. On his lamented death in 1912, Mr Innes undertook the continuation of the photographic work; the plates are now (1912) being discussed for stellar distribution at the Royal Observatory, Greenwich—a discussion which will undoubtedly yield results of much interest and value to cosmical astronomy.

During this year I was absent, on leave, from 25th March to 25th October, and during my visit to England attended **1904.** the Congress of the International Association of Scientific Academies as a delegate of the Royal Society, and was also much occupied with preliminary arrangements in connection with the approaching visit of the British Association to South Africa in 1905.

A very large amount of labour during the year was devoted to work connected with the installation and determination of the constants of the new transit circle, the investigation of the errors of graduation of the circles for every division line on the fixed circle (5′ to 5′), and, for the movable circle, the error of each line marking the degrees. The observations were begun 1903 September 28, and completed 1904 October 24; ten different observers took part in the work. The investigation involved 76,524 pointings for the fixed circle, and 22,300 for the movable circle. Mr Hough's derivation of the division errors from these observations is given at pp. 84–114 of the present work.

Four complete and independent series of investigations of the errors of the pivots were made during 1904, viz., two with clamp E and two with clamp W; all agree with each other and with the results obtained in 1903. Investigation of the flexure and torsion of the axis, flexure of the tube and circles, constancy of the Nadir under opposite conditions of motion from the Zenith, have also been made, as well as determinations of the circle and eye-end micrometer screws, and the screw-value and contact intervals of the Repsold travelling wire micrometer. All these operations were carried on day and night, to the practical exclusion of ordinary meridian observing with the new transit circle, because it is only by such observations and their immediate discussion that instrumental defects can be discovered and remedied and a sound observing system with a sound instrument be established.

The observers have all passed through a course of training in observing by the Repsold method with the travelling wire; that is to say, in the original method proposed by Dr Repsold, in which no clockwork is employed to aid the observer. The apparatus for the automatic motion of the travelling wire at approximately the apparent rate of the star's motion across the field was then under construction by the Société Genevoise.

A large number of observations have also been made to test whether the travelling wire method is free from the personal error in Right Ascension depending on magnitude. The result goes to show that, by the travelling wire, this source of systematic error is almost, if not entirely, eliminated. The actual mean for the six observers makes a fainter star observed later than a bright star by $0^s{\cdot}0026$ per magnitude, or about one-sixth part of the corresponding personality for the same observers when employing the usual method of chronograph observing. The mean result, however, scarcely exceeds its probable error, and it seems likely that, with more experience of the method, an almost complete elimination of personal error will result, not only in personality depending on magnitude, but also independent of the velocity and direction of motion of the stars.

The work of the old transit circle during 1904 was confined to the few observations necessary to complete the Catalogue of 2798 selected Zodiacal stars, and to a redetermination of the personal equation of the observers depending on magnitude, and the necessary determinations of time.

Owing to an unfortunate accident, which occurred during the absence of the regular observers, the driving worm and sector of the Victoria telescope were damaged, and the moving portion of the instrument, including the polar axis and telescope tubes, had to be raised in order to remove the damaged sector. The sector, driving worm, and slow-motion gear were sent to Sir Howard Grubb for alteration and repair.

The instrument was in consequence only in use till 26th August, and was employed principally for the photography of star-spectra intended for determination of motions in the line of sight. Seventy-four star-spectra were photographed during the period, of which thirty have been measured and radial velocities deduced for *α Phœnicis*, *α Tauri*, *α Argus*, *α Canis Majoris*, *α Canis Minoris*, *β Geminorum*, *α Boötis*, and α_2 *Centauri*.

Part 1, vol. xi. of the *Cape Annals*, containing a discussion, by Mr Hough, of the heliometer triangulation of the southern circumpolar area, and Part 2 of the same volume, containing the results of his discussion of star-places in the same area derived from the measurement of photographic plates, were passed through press. A short account of these works will be found at pp. cxxxiii–cxxxviii.

The close of the year was saddened by the news of the death of Mr Frank M'Clean on the 8th November 1904, by which I lost a very dear friend and the Observatory a most sympathetic and generous patron, whose many benefactions to the establishment are above recorded. His genuine devotion to science, coupled with his many acts

Digitized by Google

of personal kindness, had endeared him to all with whom he came in contact during his stay at the Cape in 1879, and his loss is felt by every member of the staff as that of a true and warm-hearted friend.

1905. The object-glasses for use in the meridian-mark pits of the reversible circle, after repeated returns to the makers, have at last been received of the requisite foci and of good definition. This result speaks well for the skill and patience of Mr Simms, for it is not an easy matter to make a series of four good object-glasses, each of 4 inches' aperture, and varying in focus from 20 to 40 feet, and these foci within an inch of four different specified lengths.

The meridian marks themselves, and the lenses of long focus by which the marks are viewed, can, by the methods described at pp. 39 to 41 and 46 to 48, be rapidly centred vertically over the optical centres of the four 4-inch object-glasses which are bolted to the bottom of the flanged cast-iron tubs that are cemented into unweathered rock. This adjustment can be made by a *single* setting with a *certainty* of 0·01 mm.—corresponding to 0·02 seconds of arc at the distances between the lenses and the mark.* Already, in 1905, there is evidence, from discussion of the observations of the marks, of a systematic variation of the azimuth of the transit circle itself between sunset and midnight and always in the same direction, amounting from 0″·3 to 0″·5.

The new reversible transit circle has been devoted to observations of standard stars during the whole year; the transits of stars have been observed by the Repsold travelling wire method, but without clockwork to aid the observer. Experiments, however, have been made with the Cone apparatus constructed by the Société Genevoise, but the method was not brought into general use, as the original motor required modification (see pp. 54–56).

The new transit circle was reversed on its bearings every Monday morning, and the object-glass and eye-end were exchanged in the end of 1905. The constant temperature enclosure of the standard sidereal clock was completed. The temperature within the clock-case can now be maintained constant within ±0°·1 F.

The old transit circle was employed, at the urgent request of Professor Boss, to determine the positions of 1154 stars south of Declination −36°, of which he was specially desirous to obtain observations in connection with the completion of his standard Catalogue. Stars of which occultations have been observed, or which have been employed for latitude determination in connection with the Geodetic Survey, were also included in the new working list with the old transit circle.

The driving sector of the Victoria telescope, which had been sent for repair to Sir Howard Grubb early in November 1904, was received in April 1905, together with a "quick slow-motion" in R.A. devised by him, which is of great convenience for rapidly bringing a star on the slit of the spectroscope. The instrument was brought into use on 4th May.

The Victoria telescope was devoted to the photographing of star clusters and nebulæ, and photographic observations of the Satellites of *Uranus* and *Saturn*. A number of good photographs of *Saturn's* Satellite *Phœbe* have been secured. An unsuccessful search was made on six nights for Comet Temple III.; Comet *b* 1905 was observed on two nights. Fifty-four star-spectra have been measured and discussed for motion in the line of sight. An interesting series of heliometer observations was made by Mr Bryan Cookson in 1905, to determine whether, in the case of his observations with the heliometer, the scale value is affected by a term depending on the square of the distance measured. The question has an important bearing on his determination of the mass of Jupiter, and it was eminently satisfactory to find that the term in question is practically insensible (see pp. xci and cxxxv). Two German military officers, Captain Füsslein and ober-Leutnant von Stephani, engaged upon the determination of the longitude of Swakopmund, were provided with accommodation for their instruments at the Cape Observatory.

The longitudes of Accra and St Helena were determined (see p. cxliii).

In August of this year the British Association visited South Africa, and much of my time had to be devoted to organisation of the general arrangements. Although each centre visited had its own Committee, which was responsible for its own local arrangements, yet, admirably as these Committees worked, the demands on my time and thought as General Secretary were very exacting. By the exertions of the Committees, the cordial co-operation by various Governments, and the admirable arrangements of the railway service, everything worked out to the satisfaction

* The invariability in the azimuths of these underground marks has proved to be quite remarkable, and, indeed, it seems as if the great mass of the rock which comprises the Malmesbury beds, to which the four lenses are attached, remains as a whole rigid in position with respect to what we may call the *mean axis* of the earth's rotation. If the earth does not always revolve about the same axis, the "change of latitude" so produced will of course change the astronomical azimuth of the marks. In other words, if the marks are really stable with respect to the earth as a whole, their changes of astronomical azimuth should form a means of determining the change of latitude. Mr Hough informs me that in one year, for which he had completed the definitive azimuths (derived from his recent fundamental determinations of the right ascensions of circumpolar stars), the curve of "change of latitude" derived from the observations of the marks agrees precisely, on the whole, with that derived at the Potsdam Geodetic Institute from the discussion of the Talcott observations made at the International Latitude Stations. In no mean of a fortnight's observations (the instrument being reversed every Monday morning) does the difference from the Potsdam smoothed curve amount to 0″·1, and is generally much less. In fact, the two smoothed curves agree perfectly. Mr Hough's determination of the periodic errors in the right ascensions of the recent fundamental catalogues gives further proof of the stability of these marks and the importance of their systematic employment (*Monthly Notices, R.A.S.*, January 1913, p. 138, and *The Observatory* for February 1913).

Digitized by Google

of our guests. The outcome of the visit was the creation of many private and scientific friendships between the Colonies and our visitors, and a very great impulse was given to the promotion of science in South Africa. A large number of the members availed themselves of the opportunity to visit the Observatory. The following astronomers made frequent visits and careful studies of the instruments and of the working of the Observatory generally :—

Dr Backlund, . . .	Pulkowa.	Mr A. Hinks, . . .	Cambridge.
Dr de Sitter,* . . .	Groningen.	Professor Joly, . . .	Dublin.
Professor Donner, . .	Helsingfors.	Dr Rambaud, . . .	Oxford.
Professor Harzer, . .	Kiel.	The Earl of Rosse, . .	Birr Castle.

At the same time I had the pleasure and privilege of having as my guests at the Observatory during the stay of the Association at Cape Town, Professor J. C. Kapteyn of Groningen, who announced at the meeting his discovery of the two great star-streams; Admiral Sir William Wharton, President of the Geographical Section; Sir George Darwin, President of the Association; and Lady Darwin.

The death of Sir William Wharton was the tragedy which terminated the otherwise happy visit of the British Association to South Africa, and which, for me personally, has always shadowed the memory of it. He was attacked by sudden illness on the return journey from the Victoria Falls; but fortunately his friends, Sir Lauder Brunton and Sir David Bruce—both eminent physicians—travelled in the same train, so that he had the most skilled and tender care by the way; and, on arrival at Cape Town, he was brought straight to the Observatory. He was then suffering from pneumonia, but two days later typhoid fever developed, and, after ten days in a state of semi-unconsciousness, he gently passed away, to the inexpressible grief of all who loved him. A few days later he was buried with Naval honours at Simon's Bay, and laid in the Naval cemetery, overlooking the sea that he loved so well. By his death I lost one of my oldest and best friends. Our friendship began when we were both engaged in longitude operations at Mauritius in 1874 (see p. xxxv), and it continued unbroken to the last. He held for twenty years (1884–1904) the post of Hydrographer, and, from the soundness and width of his knowledge, his moderation and sound judgment, filled that important post with singular distinction. His knowledge of astronomy and his great interest in the subject were fortunate circumstances for the Cape Observatory, and enabled him to give sound opinions when questions dealing with its interests were referred to him (see also footnote, p. xxi).

The new reversible transit circle was in regular use throughout the year, being employed in observations for the new Fundamental Catalogue and in certain researches on the "magnitude equation" in connection with the aftermentioned heliometer observations. The Repsold-Struve method of observation was continued, without the use of clockwork. Experiments were continued with the clock-driven wire, and, so long as the electro-motor preserved a nearly uniform rate, the cone apparatus and differential gear worked to perfection, and the star could be maintained in perfect bisection on the travelling wire throughout the transit by pressing one or other of two keys, of which the action of one is to accelerate the other to retard the rate of motion of the wire by 4 per cent. But, unfortunately, the rate of the motor varied by quantities greater than 4 per cent., so that, until this variation of rate was corrected, the perfection of bisection during the transit of a star could not be maintained.†

The old non-reversible transit instrument was employed in continuation of the observation of the list of stars undertaken last year, and that work was completed in the beginning of August. From that time a series of observations of selected stars, whose relative positions were accurately fixed by heliometer measurement, was made, in order to determine the personality of the observers depending on magnitude both with the old and new transit circles. That is to say, a bright star, having two much fainter stars, the one preceding the other following it, is selected, all three stars being situated nearly symmetrically with respect to the brighter star. Heliometer observations of the position angle and distance of the bright star with respect to the fainter stars obviously determine the right ascension of the bright star relative to the fainter stars, with results that are free from personality depending on the magnitudes of the stars or of the adopted scale-value of the heliometer. The results are published in the *Monthly Notices, R.A.S.*, vol. lxvii. p. 248, and show, for the observers with the old transit circle, personal equations nearly identical with those derived by the method of screens, and nearly insensible personal equations for those derived by the moving wire method with the new transit circle. The Victoria telescope was employed principally for the determination of the radial velocities of stars by means of spectra photographed with the four-prism spectro-

* Now Professor at Leiden.

† This difficulty has now been overcome by the employment of a simple shunt-wound electro-motor of much greater size and power than is really required to do the work, and which therefore runs without much heating (or consequent change of internal resistance and rate), and is not practically affected in rate by the small excess or defect of work done (*i.e.* according as the motion of the travelling wire is accelerated or retarded). Also, instead of producing differential motion in the manner suggested at p. 56, the differential motion is given at the eye-end by a convenient arrangement, which will be subsequently described by Mr Hough.

Digitized by Google

graph. Mr Lunt discovered evidence of the presence of europium in the spectra of the stars α *Bootis* and β *Geminorum*. His paper on the subject is published in the *Proceedings of the Royal Society*, vol. lxxix. p. 118.

The 18-inch visual telescope of the Victoria equatorial was employed on seventeen nights for observations of the comet Finlay and comet Metcalf by Messrs Hough, Lunt, Baldwin, and Simpson, and daylight observations of the position angle and distance of the components of α *Centauri* were made on eight days by Messrs Baldwin * and Innes.

The Cape Catalogue of 8560 Astrographic Standard Stars between declinations −40° and 52° for the equinox 1900, containing also comparison of the star-places with those of other catalogues and the derivation of the proper motions of all the stars for which previous observations exist, was, after many delays in printing, finally passed through press in 1906.

The Cape General Catalogue for 1900, based on observations with the 8-inch transit circle during the year 1900–1904, containing 2798 Zodiacal stars and all C.P.D. stars not fainter than 8·5 magnitude (except those of Zone −42° to −50°), which are not previously contained in any catalogue of precision, was passed through press.

Vol. x. part 2, of the *Cape Annals*, containing researches by Mr Lunt on the spectra of silicon and fluorine, was printed and issued.

Part 2 of vol. xii. of the *Cape Annals*, containing Mr Bryan Cookson's observations with the Cape heliometer of the relative distances and position angles of Jupiter's satellites, and his derivation from them of the mass of Jupiter and the inequalities of the satellites, and Part 3, vol. xvi., containing Mr de Sitter's discussion of the inclination and nodes of the orbits of Jupiter's satellites derived from measures of photographs taken at the Cape in the years 1891, 1903, and 1904, were sent to Greenwich for distribution. (See pp. lxxxviii and xciii.)

Part 5 of vol. ii., containing meridian observations of the Sun, Mercury, and Venus during the years 1884–92, part 6, vol. ii., containing the results of occultations of stars by the Moon during the years 1896–1906, and part 1, vol. vii., containing heliometer observations of the major planets during the years 1897–1904, were forwarded for press.

Colonel Morris completed the reductions of the Geodetic Survey of the Transvaal and Orange River Colony, and returned to England early in 1907.

The chain of triangulation connecting the northern end of the 30th meridian arc in the Transvaal with the existing triangulation in Rhodesia was completed by Captain Gordon, R.E., in course of the year.

In the early part of this year my health became very unsatisfactory. I had fainted, without apparent cause, on two occasions; and my medical adviser strongly recommended that, if possible, I should retire before another hot season at the Cape, and live afterwards in a more bracing climate. By the age-limit of service my retirement would occur automatically on the 12th of June 1908. Under these circumstances it seemed the proper course to intimate to the Admiralty my desire to retire on the 19th of February 1907 (the date on which I would complete twenty-eight years of service), and to apply for leave of absence from October 1906. Their Lordships most kindly replied that the leave I applied for was readily granted; but they expressed the hope that the proposed change would be so beneficial to my health that I would be able to return to duty after the hot season at the Cape had passed. I could, in reply, only express my gratitude and warm thanks for their Lordships' considerate kindness; but added that, having regard to the strong opinion expressed by my doctor, I desired to confirm my proposal of retirement, and would, with their Lordships' permission, sail for England in October.

CONCLUSION.

It is impossible to close this history without special reference to the staff and their services.

On my arrival at the Cape in 1879 the staff consisted of:—

First Assistant.—Mr W. H. Finlay, M.A.
Second Assistant.—Mr G. W. H. Maclear.
Third Assistant.—Mr R. T. Pett.
Fourth Assistant.—Mr Isaac Freeman.
Computers.—Messrs J. T. Butler, C. R. Pillans, I. J. Venner.

* Mr J. H. Baldwin, a research student in Astronomy from Melbourne University, arrived at the Observatory on 18th July for a six months' course of study in practical Astronomy. He devoted himself to the study of α *Centauri*, both visually and spectroscopically, and he assisted in the work of the heliometer and the Victoria telescope.

Digitized by Google

Reorganisation of the staff became necessary from time to time from the fact that the work at the Observatory gradually enlarged, both in variety and in extent, and the responsibilities of the Astronomer and his staff ultimately became quite as great as those at Greenwich. In 1880 there had been the introduction of the heliometer researches for stellar parallax, followed by the erection of the new heliometer in 1887 and the extensive researches made with it from 1888 onwards. To this was added the work of the Astrographic Chart and Catalogue, and to this again the Astrophysical work of the M'Clean telescope, and the erection, testing and working of the new reversible transit circle. It was therefore but reasonable that the first assistant at the Cape should in future hold the same rank as the Chief Assistant at Greenwich, and that additions to the staff with corresponding promotions should be made.

In Appendix I. will be found a complete list of all officers and other employees of the Observatory from 1820 down to the end of 1910, together with data by which the successive changes in promotion and reorganisation of the staff may be traced.

When I retired in 1907 the staff was constituted as follows:—

Chief Assistant.—Mr S. S. Hough, M.A., F.R.S.
Assistants.—Messrs Joseph Lunt, B.Sc.; R. T. Pett; W. H. Cox; and John Power.
Established Computer (Higher Grade).—Mr Robert Woodgate.
Established Computers.—Messrs J. A. Pead, Robert Cheeseman, A. W. Goatcher, J. A. Wilkin, C. W. Jeffries.
Secretary, Librarian, and Accountant.—Mr Arnold Pilling.
Uncovenanted Computers.—Messrs J. A. Jackson, H. F. Mullis, J. A. Simpson, F. H. Scragg, W. Whittingdale, J. C. Wood.
Typist.—Miss L. Carney.

The following ladies were employed on the measurement of the plates and in computing and copying the work connected with the Astrographic Star Catalogue:—Misses E. Van Lingen (in charge), M. S. Backwell, M. Coates, N. Crosby, N. Maclear, M. Stevens, M. E. Straith, H. F. Twamley.

The following Artificers were also employed:—

Established Optical Fitter.—Mr T. Miller.
Supernumerary Artificer.—A. Baines.
Stoker.—J. Short.
A Resident Carpenter, borne on the books of the Director of Works Department under the Resident Engineer at Simon's Town.
Three Kroomen—J. Crow, P. Glasgow, and King Solomon—borne on the books of H.M.S "Crescent" at Simon's Bay, as labourers on the grounds, messengers, and cleaners.

A few words must be said relative to the services rendered by some of the more prominent members of the staff; but in the case of Mr Finlay I feel that a fuller notice of his services should be given, as in the case of Mr Piazzi Smyth (p. xxviii) and Mr Mann (p. xxviii).

William Henry Finlay was born at Liverpool on the 17th June 1849. He was educated at Liverpool College School, where he specially distinguished himself in the departments of Mathematics and Science. He gained a Minor Scholarship at Trinity College, Cambridge, in 1869, and a Foundation Scholarship in 1871, graduating as 33rd Wrangler in 1873.

On the retirement of Mr Mann, Mr Finlay was selected on 1873 April 9, to fill the post of First Assistant at the Cape Observatory. He arrived at the Cape on the 21st June 1873, and very rapidly mastered the more routine duties of his office, which, during Mr Stone's directorate, were chiefly confined to the reduction of the arrears of Maclear's meridian observations and the current meridian re-observation of Lacaille's stars. Mr Finlay took his full share in these observations, and in their systematic reduction and preparation for press in catalogue form. He observed the transits of Venus of 1874 and 1882; at the latter he occupied an isolated station (Aberdeen Road), of which he determined the longitude.

Under my directorate he was assigned the principal share in the longitude operations connecting Aden and the Cape, observing both at the Cape and Aden. Besides his official work in these operations, in course of his voyages to and from Aden, during the short stoppages of the steamer at Delagoa Bay, Quilimane, Mozambique, and Zanzibar, he determined local time at the two first-mentioned stations with a sextant and artificial horizon, and at the two latter by means of vertical transits with a 14-inch theodolite by Troughton & Simms, and at all of them he exchanged time signals with the Cape. The observations and the resulting longitudes are published by him (*Monthly Notices, R.A.S.*, xliii. p. 483).

Digitized by Google

He devoted himself with great zeal to the observation of comets and occultations of stars; the numerous and accurate observations of comets which emanated from the Cape Observatory between 1880 and 1898 are mainly due to him. He independently discovered the great comet of 1882, and made the first determinations of its position (*Monthly Notices, R.A.S.*, xliii. p. 483). Along with Dr Elkin, he observed the disappearance of this comet at the Sun's limb with the 7-inch equatorial. Of this unprecedented circumstance he writes (*loc. cit.*, xliii. p. 22): "By keeping the Sun's limb at the edge of the field I was able to follow the comet continuously right into the boiling at the limb. I lost sight of it suddenly at $4^h\ 50^m\ 58^s$ Cape M.T., when the Sun's limb was boiling all about it. I fancied I caught a glimpse of it 3^s later, but was not sure. I then examined the Sun's disc very carefully, but could not see the very slightest trace of the comet. I swept round the limb before the Sun disappeared behind the Lion Hill, but saw nothing. The Sun was then very low and the definition bad. Two measures with the micrometer about half an hour before the disappearance gave 4″ for the diameter of the comet's disc."

To Dr Elkin, observing with one segment of the 4-inch heliometer object-glass, the nucleus of the comet disappeared six seconds before the time recorded by Mr Finlay. He writes (*loc. cit.*, p. 23): "I actually observed it (the comet's nucleus) to disappear among the undulations of the Sun's limb at $4^h\ 50^m\ 52^s$ Cape M.T., the observation being considered at the time as accurate as an occultation of a star, say, of the fourth magnitude, at the bright limb of the full Moon. The moment noted was when the last trace of the comet was suspected amidst the boiling of the limb: 4^s before it was still plainly visible. The undulations were, however, already some 5″ in magnitude, and the comet was probably still some fraction of this distance from the Sun's true limb. . . . A red glass sunshade was used, and it appeared to me that the intrinsic brilliancy of the nucleus, and of a small portion of the emanations from it, could scarcely have been inferior to that of the Sun's surface itself. Immediately after noting the times, I changed the low power (60) with which the previous observation was made for one of 180, and carefully scrutinised the place where the comet had disappeared, and its probable path, for about quarter of an hour without being able to detect any traces of a body, dark or bright, on the face of the Sun. The definition was, however, with increasing zenith distance, becoming worse and worse, and I noted at the time that possibly an object of 1″ or less (in diameter) might have escaped unnoticed, to which I might add that at the time of disappearance at the limb the nucleus was estimated to be still some 5″ in diameter. At that time it was not possible to say with certainty whether the comet was passing behind the Sun or between us and the Sun, the available observations not admitting of any reliable conclusions being deduced from them. As this latter proved to be the case, the fact of a comet's invisibility on the Sun's face, to ordinary instrumental means at least, lends an additional interest to the observation."

In conjunction with Dr Elkin, Mr Finlay published the first elements of the comet, and pointed out their strong resemblance to those of the great comets of 1843 and 1880. He discovered the comet (1886 *e*) which bears his name; his computed elements of this comet are published, *loc. cit.*, xlvii. p. 302.

He also independently found comet 1886 *f* after its perihelion passage, and his are the only post-perihelion observations of the comet that exist. In the same year he succeeded in observing Winnecke's periodic comet, which had escaped detection in the Northern Hemisphere. He also published approximate elliptic elements of comet 1884 (Barnard) (*loc. cit.*, xlv. p. 54) and approximate parabolic elements of comet 1887 *a* (*loc. cit.*, xlvii. p. 303), which was remarkable for an almost entire absence of nucleus or condensation. The elements of the latter comet, although thus of necessity "rough," prove conclusively that the comet belongs to the family of "Sun-grazers," of which 1843 I. and 1880 I. and 1882 II. are members.

He was an admirable observer with the heliometer, as is evidenced by the results of the observations made by him in connection with the triangulation of the Victoria comparison stars, the observations of the satellites of Jupiter, and of stellar parallax, already quoted. Astronomers are indebted to him for the excellent "Star-correction Tables," which are now so largely used. They are first described by him in the *Monthly Notices, R.A.S.*, vol. i. p. 497, and are published as an Appendix to the *Cape Meridian Observations, 1890–91*. The corresponding "Day-Numbers" are published annually by the Cape Observatory.

He became a member of the South-African Philosophical Society from 1881, and its General Secretary from 1881 till 1887, when he was elected its President—an office which he held for two years. He was also a member of the Cape Meteorological Commission and an examiner in Mathematics for the Cape University. In 1897 he fell into bad health, and in August of the following year was obliged, on this ground, to retire on pension.

Mr George W. H. Maclear was the eldest son of Sir Thomas Maclear; on his father's recommendation he was appointed Second Assistant in June 1852, when only sixteen years of age. In August 1884 he became 2nd Class Assistant, under the new reorganisation of that year, and retired on pension, in ill health, in June 1893. His services during my directorate, and I believe in that of Mr Stone, were primarily connected with the Time and Time-signal service, and he was responsible for the reduction of all meridian observations in Right Ascension.

Digitized by Google

In his early days he made a few observations of double stars, was a diligent observer of comets and occultations, and during his whole career was an active observer with the transit circle. He took part in the longitude operations connecting Aden and the Cape, and in many smaller operations of the kind. He was an earnest, diligent, and accurate worker in all the departments in which he was engaged; but his limited education, consequent on his too early adoption of strenuous practical routine work, prevented the possibility of the farther promotion to which his long and devoted services would otherwise have entitled him. He died at his house, in Mowbray, on 1895 June 26.

Mr R. T. PETT joined the staff of the Observatory in 1876, to fill the position of 3rd Assistant, vacated by the retirement of Mr Calcott Stevens. In August 1884 he was promoted to the rank of 2nd Class Assistant, and in September 1900 to that of Assistant. He rendered great assistance in 1879 and 1880 in the preparation of the *Cape Catalogue of 1850* for press, and did excellent work in the department of miscellaneous computations. Until 1891 Mr Pett was in charge of the library and accounts, and throughout the whole of his service has been a regular and very accurate observer with the transit circle. On the retirement of Mr Maclear in 1893, Mr Pett succeeded him in charge of the Time Department and the reduction of all the Meridian Observations in Right Ascension. He has taken an active part in nearly all the longitude operations since 1879 and especially in the determination of the longitude of St Helena (p. cxliii) and in the connection of the longitudes of Greenwich and the Cape *via* Ascension (p. xxxv).

Mr W. H. Cox, on the retirement of Mr Isaac Freeman, was appointed a Junior Assistant at the Cape in 1883. In 1893 he was promoted to an Assistant (2nd Class), and in 1905 to be Assistant. His work has been confined almost exclusively to meridian observing and the reduction of meridian observations in declination. He has discharged these important duties in a most earnest and accurate manner down to the present time.

Mr J. POWER, after long experience (dating from 1875) as a Computer at Greenwich, joined the staff of the Cape Observatory in 1891. The secretarial work of the establishment had so increased that I found it impossible, without the neglect of scientific work, to continue it single-handed; and Mr Pett's astronomical duties, above mentioned, had so developed in amount that it was impossible for him also to take effective charge of the library and accounts. To Mr Power was, therefore, assigned the duties of Secretary, Accountant, and Librarian, and these he performed admirably till 1897. Upon the reorganisation of the Observatory in that year, Mr Power was relieved of these duties, and was put at the head of the miscellaneous computing department, in which position he has shown remarkable industry and devotion to the service, and has achieved an exceptional amount of valuable work, particularly in connection with the preparation and proof-reading of the *Cape General Catalogue for 1890* (published 1898); the *Cape General Catalogue for 1865* (published 1899); the *Cape Astrographic Standard Star Catalogue* (published 1906); the *Cape Catalogues of Special Stars for 1900* (published 1906); and the *Cape Catalogue* (Boss's Stars S. of $-36°$) (published 1907). He has also rendered very valuable services in connection with the revision and control of the co-ordinates of the "Catalogue plates" and their preparation for press. Throughout his service he has performed regular and active duty as a transit circle observer. He was promoted to the rank of Junior Assistant in 1895, Established Computer (Higher Grade) in 1897, and Assistant in 1905.

Mr R. T. A. INNES joined the staff of the Cape Observatory in 1897 as Secretary, Accountant, and Librarian. He devoted all his spare time from these duties to active astronomical research—a voluntary service entirely outside his official duties, and by his zeal and capacity made valuable additions to the work of the Observatory. His work in the revision of the *Cape Photographic Durchmusterung* is dealt with at pp. lviii to lx, and that connected with double stars at p. cxxxviii. He retired on 1903 March 31st, on appointment to the Directorship of the Transvaal Observatory * (see also p. lix).

The gift of the Victoria telescope by Mr Frank M'Clean, with its provision for spectroscopic research, necessitated the appointment of an additional assistant with previous training in Physics and Chemistry. On the recommendation of Sir Henry Roscoe, Mr JOSEPH LUNT was appointed to the post in July 1897, and reached the Cape on 24th October of the same year. But long delays occurred before regular spectroscopic work could be undertaken. The telescope only reached the Cape in April 1898, and, after long and exhaustive trials, it was found that the large object-glass was defective. At the request of Sir Howard Grubb, it was returned to Dublin for correction in October 1899, and was received at the Cape again in February 1901. After a series of experimental trials the object-glass was definitely accepted as satisfactory. During this time Mr Lunt was employed in many varieties of work, including the experimental tests and the equipment of the Astrophysical laboratory. As related under the head of "Astrophysical Observations" (p. cxxxix), further delays occurred in connection with the completion of the

* Now Government Astronomer at the Union Observatory, Johannesburg.

Digitized by Google

spectroscope, and Mr Lunt was sent to Cambridge to supervise the alterations. At pp. cxl–cxli will be found an account of Mr Lunt's subsequent work at the Cape.

On the retirement of Mr Innes, Mr ARNOLD PILLING was appointed on 1903 November 3, after competitive examination, to the post of "Clerical Assistant," to perform the duties of Accountant, Secretary, and Librarian, and these official duties he has most satisfactorily performed to the present date.

Mr R. WOODGATE, after some years of service at the Royal Observatory, Greenwich, joined the Cape staff of Computers in 1897. He was promoted to be Established Computer on 1900 March 31st, and Established Computer (Higher Grade) the following year. On Mr Ray Wood's resignation, in 1901, he was placed in charge of the work of the Astrographic Chart and Catalogue. By his skill as a photographer, and his thoroughness and accuracy in supervision of the photographic work, he has rendered very valuable service in this department, as he had also done in his previous capacity of meridian observer and computer.

Mr C. RAY WOODS, appointed "Photographer" in 1889, did good observing work in connection with the *Cape Photographic Durchmusterung* and in the earlier parts of the international astrographic work. He was promoted to be Established Computer in 1897, and resigned in bad health in 1901.

Mr HENRY SAWERTHAL entered as a Computer from 1885, and took part in the work of the *Cape Photographic Durchmusterung*. During this work he discovered the comet which bears his name. He left the Observatory to enter the service of the Survey in 1889.

Special mention, however, should be made of the services of the following gentlemen who left the Observatory and did exceptionally good work in the Geodetic Survey :—

Mr W. B. ROBINSON joined the Observatory as a Computer in 1883, where he did excellent work. He left the Observatory at the end of 1888, where he rendered very valuable services both in the field and in office, and by private study passed as a Government Surveyor. He attained great skill and facility in the reduction and adjustment of complex trigonometrical figures and in all operations connected with Geodetic Survey. The computations of the re-reduction of Bailey's Survey (*Geodetic Survey of South Africa*, vol. ii.) are entirely his work, and he rose to be head of the Computing Department of the Transvaal and Orange River Colony.* He is now Assistant Surveyor-General of Southern Rhodesia.

Mr ALEXANDER SIMMS was a Computer at the Cape Observatory from 1891 June 1 to 1893 January 31, when he became a Government Surveyor, and finally joined the Geodetic Survey. He was an admirable observer, and was in charge of the field work of the Geodetic Survey of Southern Rhodesia (*Geodetic Survey of South Africa*, vol. ii.). He rendered excellent service there, and also in the Geodetic Survey of the Transvaal and Orange River Colony.*

Mr VICTOR LÖWINGER came as a young Computer to the Observatory in 1895, and did good work in that capacity until the end of 1900. He then devoted himself chiefly to Survey matters, but was available for occasional observing duty at the Observatory until 1903 April 30. He took a large part in the heliometer triangulation of the Southern Circumpolar area 1897–99 (*Cape Annals*, vol. xii. part 2), and shared with Mr de Sitter in the heliometer observations of δ *Sagittarii* (*Cape Annals*, vol. viii. part 2, pp. 124B to 129B), and with others made heliometer observations of the major planets (*Cape Annals*, vol. viii. part 1) until the end of April 1903. He afforded great assistance to Mr Bryan Cookson in the heavy computations connected with the solution of the normal equations in the discussion of his heliometer observations of Jupiter's satellites (*Cape Annals*, vol. xii. part 2, p. 5). Mr Löwinger was then attached to the Geodetic Survey of the Transvaal and Orange River Colony, where he carried out the greater part of the levelling operations (*Geodetic Survey of South Africa*, vol. v. pp. 229–242). He now occupies an important position in the Survey of the Malay Free States.

I must refrain from acknowledging in detail the services of officers of lower rank, but I am very far from implying that only those of higher rank than Computer † have done first-rate service. On the contrary, I should state that during my directorate no Computer was recommended for Civil Service examination, previous to promotion to an established post, unless he had proved himself to be of reliable character, a good observer, and an accurate and painstaking Computer. Much of the work of a great Observatory depends far more upon these qualities than upon the mathematical powers of those who perform it. A man may be a good mathematician, but quite useless as an observer; or he may be wanting in that painstaking care, concentration, and sustained accuracy which are essential in most departments of Observatory computations. No ordinary Civil Service examination is capable of deciding a candidate's worthiness in these particulars. One must, therefore, insist that before promotions to established posts in Observatories where regular observing and routine computations are the chief duties, that the supreme condition

* See also *Geodetic Survey of South Africa*, vol. v. pp. iii and vii.

† The word "Computer" is here employed to denote a special rank or grade of service, and does not imply that the corresponding duties are confined to computing. By the time I left the Cape every Computer was also an Observer; those incapable of observing having been weeded out.

Digitized by Google

for appointment should be a thorough probationary trial of capacity in the above-mentioned essentials. Of course, when these qualities are coupled with high intelligence, insight, and adequate mathematical attainment, we have the ideal practical astronomer; but the combination is rare. The great observer is born, not made, as is also the great mathematician; and it is very rarely that both faculties are united in a high degree in one individual; the like limitations often hold good in men of more moderate attainments in both departments. In the creation of the staff of every Observatory it should constantly be borne in mind that no mathematical treatment can convert poor observations into good ones, and that the best observations can be robbed of their value by improper or inaccurate reduction. For these reasons the Director of every considerable Observatory should be in a position to select his staff as far as possible with strict regard to the duties which any particular candidate is to perform; and, if the staff is sufficiently large to permit the exclusive devotion of a particular officer purely to the mathematical and computing side of work, or to nearly exclusive employment in observations demanding special skill, it is advisable, as far as possible, to divide the duties of the officers in accordance with their special aptitudes. However earnestly the Director of an Observatory may strive to regulate promotion on his staff in accordance with these principles, he must frequently be thwarted in his desires by circumstances over which he has no control. He may from time to time find a man amongst his uncovenanted staff who, in a comparatively short time, shows special or even general capacity, and who would unquestionably be a valuable addition to his permanent staff. But, as time goes on and no vacancy of the kind occurs, the aspirant for a position more in accordance with his capacity is apt to become impatient. It may be sometimes possible to gratify his desires in the matter of higher work, but the Director too often has no means of granting him corresponding pay and a reasonable prospect of suitable permanent employment. In my own experience, some of our very best men in every sense have been thus lost to the service; and when at last a vacancy occurs the best man to fill it has gone and perhaps one with lower claims has to be appointed. Some of the best Computers and established Computers left on these grounds during my directorate to fill positions in the Geodetic Survey, or to become permanent Government Surveyors in South Africa, the Malay Free States, etc. Others of the most promising men have left for similar employment since my retirement in 1907. The Observatory can at least congratulate itself on having trained many men who have subsequently done useful scientific work in other directions; and I know that the best of these men would have preferred to remain doing work for astronomy had it been possible to offer them suitable permanent positions at the Observatory, and that both Mr Hough and myself were no less eager to retain them. It is not easy to see how such cases can be avoided, unless some system of temporary or brevet rank and pay could be sanctioned for the retention of specially valuable men until vacancies on the permanent staff occur.

The ladies employed on the measurement of the Catalogue Astrographic plates have worked steadily and well, although at first it was difficult for them to realise the minute accuracy required. This necessity was gradually instilled, and now the work is on an entirely satisfactory basis. Mention must also be made of the services rendered by Mr T. Miller, optical fitter to the establishment. When the Astrophysical Department was founded, as the result of Mr Frank M'Clean's munificent gift, it became necessary to have the services of a qualified optical fitter, to keep the complicated apparatus in order, and make, from time to time, such auxiliary apparatus as the exigencies of research require. Mr Miller was appointed to the post in 1898, on the recommendation of Mr James Simms (of Troughton & Simms). He has fully realised the high recommendation which he received. He is a first-rate all-round mechanician, and an earnest, inventive, resourceful man, devoted to his work and the interests of the Observatory. His services have been of the greatest value, and he was placed on the permanent establishment on 1903 November 14.

When Mr Finlay retired, in 1898, I begged the Admiralty, in considering the question of his successor, to have regard to the desirability of seeking for a man having adequate theoretical knowledge and such taste for astronomy as to fit him ultimately for the Directorship of the Observatory, provided that, after trial at the Cape, he showed himself to have also the necessary administrative capacity.

The choice fell on Mr S. S. Hough, then a Fellow of St John's College, Cambridge, and holder of one of the Isaac Newton Scholarships in Astronomy which were founded by Mr Frank M'Clean.

Mr Sydney Samuel Hough was born at Stoke-Newington, London, on the 11th June 1870. On the nomination of Mr George Moore, of Copestake, Moore, Crampton & Co. (in whose service his father was employed), he was admitted to Christ's Hospital School. There he highly distinguished himself as a student in the department of mathematics, gaining, amongst other prizes, the Thomson Gold Medal for Mathematics in 1886, the Tyson Gold Medal for Mathematics and Astronomy in 1887, and an Open Foundation Scholarship at St John's College, Cambridge, in December 1887. He did not, however, proceed to the University until the following year, obtaining, by re-examination, an Open Foundation Scholarship at St John's College in December 1888.

Digitized by Google

In October 1889 he left Christ's Hospital, and proceeded to Cambridge, having been awarded by the governing body of the School an Exhibition tenable at the University and a further prize Exhibition from the Trustees of the Pitt Club.

At St John's he became Wright's Prizeman and Hughes Prizeman, and graduated as Third Wrangler (B.A. 1892, M.A. 1895). He was awarded First-Class 3rd Division in Part II. of the Mathematical Tripos 1893.

His further University honours were:—Smith's Prizeman, 1894; Isaac Newton Studentship and Fellow of St John's College in 1895.

On completion of his University course he devoted himself largely to research work, supplemented by taking a few pupils at Cambridge. Mr Hough in these researches originally had in view the application of the methods of analysis employed in hydrodynamical problems to the elucidation of certain phenomena connected with the Earth's rotation. His earlier researches related to the physical significance, as regards the structure of the Earth, of the anomalous period of the Eulerian nutation, or variation of latitude, which was first detected by Küstner and afterwards fully established by Chandler, and to which Mr Hough's attention had been directed by Sir Robert Ball in the course of his University lectures. A development of the methods of analysis therein employed led Mr Hough to an investigation of the tides by the dynamical methods indicated by Laplace, and in his hands led to a far more complete solution of the tidal problem than had been previously obtained.

Mr Hough's later researches, principally undertaken in consultation with Sir George Darwin, related to the theory of Periodic Orbits in the form developed by him.

He was elected a Fellow of the Royal Society in 1902, and in 1906 was awarded the Hopkin's prize by the Cambridge Philosophical Society for his researches on the tides.

His appointment as Chief Assistant is dated 14th September 1898, and he reached the Cape on the 25th of October of the same year. He threw himself into the work of the Observatory with much earnestness, ability, and interest, rapidly acquiring familiarity with those departments of practical astronomy in which he had no previous experience. Our relations from first to last during my directorate were of the most cordial character, and they so continue to the present day. During my absence in England in 1900, and again in 1904, Mr Hough, when then in charge of the Observatory, showed such admirable administrative capacity that no doubts remained as to his fitness for Directorship of the Observatory; so that, on the day following my retirement, he was gazetted my successor. Throughout the period of his Chief Assistantship, Mr Hough's co-operation was of the greatest value, and added much to the importance and interest of the publications of the Observatory.

It was thus with an easy mind that I prepared to leave the Cape and bid farewell to the staff that had worked so faithfully with me for so many years, being assured that the interests of the Observatory were in good hands. I rejoice to know now that this assurance has been fully justified by the extent, thoroughness, and interest of the work that has been accomplished under Mr Hough. He has also thrown himself into the advancement of science in South Africa by becoming President, in 1907, of the South-African Philosophical Society; so that, on the reconstruction of that Society as the Royal Society of South Africa, he was elected its first President. His labours and researches are mentioned in this volume, where a list of his original papers will also be found in Appendices II. and III.

The home where a man has spent the best twenty-eight years of his life amidst stirring national events, in surroundings rich in every natural beauty, and with a life full of the work that he loves, cannot be quitted without a sharp pang of regret. But the decision had been fully considered. I realised that the most vigorous years of my life were behind me, and that the time had now come to turn over to younger hands the work in which I had so long rejoiced.

Therefore, on the 3rd October 1906, my wife and I bade good-bye to our beautiful home, taking with us treasured memories of the many happy days spent under its roof, of the loyal and cordial support of my fellow-workers, and of the many other good and true friends we left behind.

It remains now only to record with gratitude my sense of the complete consideration and generous support which I have at all times received at the hands of the Lords Commissioners of the Admiralty during the twenty-eight years I had the honour to serve them.

Digitized by Google

APPENDIX I.

Name.	Appointed.	Arrived Duty.	Left.	Remarks.
		H.M. Astronomers.		
Fallows, Rev. Fearon . .	1820 Oct. 26	1821 Aug. 12	1831 July 25	Died.
Henderson, Thomas. . .	1831 Oct. 15	1832 April 8	1833 May 27	Resigned.
Maclear, Thos. . . .	1833 July 12	1834 Jan. 5	1870 Oct. 21	Age limit.
Stone, Edward Jas. . . .	1870 June 4	1870 Oct. 13	1879 May 27	Retired; ill-health. Became Radcliffe Observer.
Gill, David	1879 Feb. 19	1879 May 26	1907 Feb. 19	Retired.
Hough, S. S.	1907 Feb. 20	1907 Feb. 20	Date.	
		First Assistants.		
Fayrer, Jas.	1820 Nov. 28	1821 Aug. 12	1822 Nov. 19	To become "Labourer."
Scully, Rev.	1822 Nov. 20	1822 Nov. 20	1824 Oct. 5	Dismissed.
Ronald, Capt. Wm. . .	1824 Nov. 29	1826 Dec.	1831 Mar. 29	Resigned; ill-health.
Meadows, Lieut. Wm. .	1831 May 30	...	1834 Dec. 25	Resigned; ill-health.
Smyth, Chas. Piazzi . .	...	1835 Oct. 9	1845 Oct. 22	Resigned to become Astronomer Royal for Scotland.
Mann, Wm.	1846 Jan. 6	1847 Dec. 23	1872 Dec. 14	Invalided.
Finlay, Wm. Henry . .	1873 April 9	1873 June 21	1897 Aug. 12	Promoted to Chief Assistant.
		Second Assistants.		
Mann, Wm.	1839 April 13	1839 Oct. 22	1846 Jan. 5	Promoted to First Assistant.
Childe, Rev. Geo. F. . .	...	1846 June 13	1852 May 1	Resigned to become Professor of Mathematics, South African College.
Maclear, Geo. Wm. Herschel .	1852 June 26	1852 June 26	1884 Aug. 10	Promoted to Second-Class Assistant.
		Third Assistants.		
Smalley, Geo. Roberts . .	1846 April 17	1846 Sept. 8	1851 Oct. 31	"Superseded at own request." Was Professor of Mathematics at South African College.
Morton, Pierce . . .	1851 Nov. 1	1851 Nov. 26	1859 April 18	Died in office.
Christie, G. A. . . .	1859 April 19	1859 April 19	1861 Sept. 30	Resigned to enter Holy Orders in England.
Fisher, Chas. D. . . .	1861 Oct. 1	1861 Oct. 1	1870 June 8	Died in office after sick leave (1869 August 27–1870 June 8). Phthisis.
Stevens, Callcott Maximilian .	1873 June 13	1873 June 13	1876 Jan. 31	Resigned to join Cape Civil Service.
Pett, Robt. Thos. . . .	1876 June 15	1876 Aug. 1	1884 Aug. 10	Promoted to Second-Class Assistant.
		Fourth Assistants.		
Morton, Pierce Edward . .	1859 April 19	1859 April 19	1860 July 15	Resigned. Went to America.
Freeman, Isaac . .	1860 Oct. 1	1860 Oct. 1	1883 June 30	Invalided.
		Title of Fourth Assistant changed to Junior Assistant.		
Cox, Walter Hubert . .	1883 Aug. 23	1883 Sept. 26	1893 June 30	Promoted.

Digitized by Google

Name.	Appointed.	Arrived Duty.	Left.	Remarks.
Staff reorganised to consist of 1 First Assistant, 2 Second-Class Assistants, and 1 Junior Assistant from 1884 August 11.				
First Assistant.				
Finlay, Wm. Hy. . . .	1884 Aug. 11	...	1897 Aug. 12	Promoted to Chief Assistant.
Second-Class Assistants.				
Maclear, G. W. H. . . .	1884 Aug. 11	1884 Aug. 11	1893 June 30	Invalided.
Pett, R. T. . . .	1884 Aug. 11	1884 Aug. 11	1900 Sept. 7	Promoted.
Cox, W. H.	1893 July 1	1893 July 1	1905 Jan. 19	Promoted.
Junior Assistant.				
Power, John	1895 Feb. 21	1895 Feb. 21	1897 Aug. 12	Promoted.
Staff reorganised July 1897, and ranks made Chief Assistant, Assistant, Established Computer (Higher Grade), Established Computer, and Clerical Assistant.				
Photographer.				
Woods, C. Ray . . .	1889 Nov. 1	...	1897 Aug. 12	Established Computer.
Secretary, Accountant, and Librarian.				
Power, John	1891 July 25	...	1895 Feb. 20	Junior Assistant.
Innes, R. T. A. . . .	1897 Jan. 1	...	1897 Aug. 12	Clerical Assistant.
Chief Assistants.				
Finlay, Wm. Henry . . .	1897 Aug. 13	...	1898 Aug. 29	Invalided.
Hough, Sydney Samuel . .	1898 Sept. 14	1898 Oct. 25	1907 Feb. 19	Promoted to be H.M. Astronomer.
Halm, Jacob Karl Ernst . .	1907 April 25	1907 July 1	Date.	
Assistants.				
Lunt, Joseph	1897 July 15	1897 Oct. 24	Date.	
Pett, Robt. Thos. . . .	1900 Sept. 8	...	Date.	
Cox, Walter Hubert . .	1905 Jan. 20	...	Date.	
Power, John	1905 Jan. 20	...	Date.	
Established Computers (Higher Grade).				
Power, John	1897 Aug. 13	...	1905 Jan. 19	Promoted.
Woods, Chas. Ray . . .	1897 Aug. 13	...	1901 Mar. 31	Resigned.
Woodgate, Robt. . . .	1901 April 1	...	Date.	
Established Computers.				
Pead, Joe Alfred John . .	1897 Aug. 13	...	Date.	
Woodgate, Robt. . . .	1897 Aug. 13	...	1900 Mar. 31	Promoted.
Cochrane, Alfred . . .	1897 Aug. 13	...	1903 Apr. 30	Resigned.
Goodman, Simon L. . .	1897 Aug. 13	...	1900 Sept. 30	Resigned.
Cheeseman, Robt. . . .	1901 June 26	...	Date.	
Goatcher, Alfred Winton . .	1901 Oct. 11	...	1907 Mar. 31	Invalided.
Wilkin, Albert Jas. . . .	1901 Dec. 10	...	Date.	
Jeffries, Chas. Wm. . . .	1903 Dec. 22	...	1907 Aug. 20	Resigned.
Simpson, Jas. Alex. . . .	1907 Aug. 16	...	Date.	
Whittingdale, Wm. . . .	1907 Aug. 21	...	Date.	
(Mr Banks appointed Established Computer 1901 September 17. Refused appointment.)				
Clerical Assistants.				
Innes, R. T. A. . . .	1897 Aug. 13	...	1903 Mar. 31	To become Government Astronomer at Johannesburg.
Pilling, Arnold . . .	1903 Nov. 3	..	Date.	

Digitized by Google

Clerks or Computers. (Not on the fixed establishment.)

Name.	From.	To.	Remarks.
Bacon, W.	1889 Feb. 1	1889 Apr. 30	
Bade, C.	1880 Dec. 29	1881 May 14	
**Banks, Eric H.*	1897 May 22	1902 May 21	
Bergh, F. E.	1898 Aug. 9	1901 Oct. 31	
Biccard, L. T.	1881 Sept. 1	1882 June 5	
Billinghurst, S.	1878 Oct. 23	1878 Nov. 10	
Bishop, Henry	1886 Oct. 12	1893 Apr. 15	
Black, J.	1873 Apr. 1	1875 Feb. 13	
Blore, C. B.	1865 Sept. 1	1868 July 31	
Bowern, Alfred	1883 Feb. 1	1886 Oct. 7	
Braine, C. H. Dymond	1901 Nov. 1	1901 Dec. 31	
Broers, F. J.	1888 July 13	1888 Dec. 31	
Butler, J. T.	1878 Nov. 15	1880 Dec. 31	
Carney, L.	1900 Mar. 15	Date.	Typist.
**Cheeseman, Robt.*	1900 Nov. 24	1901 June 25	Established Computer.
Christie, G. A.	1858 Oct. 7	1859 Apr. 18	3rd Assistant.
Coakes, G. S.	1882 July 9	1882 Dec. 31	
**Cochrane, Alfred*	1890 Mar. 25	1897 Aug. 12	Established Computer.
Crane, H. G.	1889 Nov. 3	1890 Mar. 5	
Cremonini, G.	1895 Oct. 21	1896 Apr. 15	
Crosby, Agnes G.	1895 Feb. 1	1896 Apr. 15	
De Korte, Douglas	1907 Oct. 8	1908 Dec. 11	
Deneys, A.	1855 Nov. 1	1856 Jan. 31	
De Sitter, William	1897 Aug. 27	1899 Dec. 31	
Doogan, Thos.	1856 Oct. 1	1858 Jan. 23	
Duncan, George A.	1910 Jan. 1	Date.	
Fisher, Chas. D.	1861 Sept. 1	1861 Sept. 30	3rd Assistant.
Forde, James	1883 Feb. 13	1883 June 30	
Forde, W. J.	1876 Aug. 1	1878 Apr. 30	
**Fowler, Robt.*	1907 Dec. 19	Date.	
Freeman, Isaac	1860 Sept. 1	1860 Sept. 30	4th Assistant.
	1883 July 1	1889 Aug. 5	Pensioned Assistant.
Goodman, Simon L.	1890 Jan. 10	1897 Aug. 12	Established Computer.
Greathead, Milner	1877 Apr. 8	1877 Aug. 13	
	1878 Jan. 1	1878 Nov. 15	
Greathead, Wilson	1875 July 16	1876 July 31	
**Gummer, Wallace A.*	1901 Jan. 19	1903 Mar. 13	
Harrison, H.	1894 Jan. 1	1895 Dec. 31	
Hemming, J.	1855 Nov. 1	1856 Jan. 31	
Hemming, R. C.	1854 Apr. 1	1854 Dec. 31	
Herbert, A. L. H.	1900 Sept. 10	1900 Nov. 10	
Hickson, James.	1856 June 1	1856 July 31	
Hill, H. W.	1888 Feb. 13	1888 Apr. 28	
Jackson, John Wallace	1903 Aug. 1	Date.	
**Jeffries, Chas. W.*	1902 Aug. 23	1903 Dec. 21	Established Computer.
**Johns, Ferdk. J.*	1897 May 22	1901 Feb. 14	
Jurisch, Theo.	1897 June 1	1899 Aug. 9	
Kretzchmar, J. M.	1889 Apr. 27	1889 Oct. 31	
Kuys, D. T.	1855 Sept. 1	1855 Oct. 31	
Le Beau, O.	1903 May 16	1903 Dec. 31	Invalided.
Leigh, G.	1898 Sept. 1	1898 Sept. 30	
Leisel, M.	1885 July 10	1885 Aug. 31	
Löwinger, Victor A.	1895 Jan. 14	1900 Dec. 23	Continued to observe till 1903 April 30.
Lowrie, R.	1873 Dec. 27	1875 June 7	Died 1875 June 7.
M'Lachlan, W. D.	1889 Jan. 31	1897 Jan. 31	
Martin, W. J.	1875 Mar. 20	1879 Mar. 20	
Meldrum, Maurice	1902 Dec. 1	1905 Mar. 31	
Merriman, John Xavier	1863 July 20	1863 Aug. 27	
Mileham, John	1856 June 1	1857 Mar. 31	
Morgenrood, S. B. (B.A.)	1892 Apr. 1	1895 June 30	
	1897 June 1	1897 Sept. 30	
Morris, H. L.	1871 Oct. 1	1872 Nov. 21	
Morton, Pierce E.	1857 Apr. 1	1859 Apr. 18	4th Assistant.
†*Mullis, Harold F.*	1901 July 20	Date.	
Needham, H. C.	1884 Dec. 1	1885 Feb. 28	
Nicholson, R. L.	1852 July 1	1854 Feb. 28	
Norris, J. H.	1889 May 1	1890 Mar. 31	
Omerod, W. G.	1854 Feb. 1	1855 Sept. 30	
Orpen, T. R. M.	1855 Nov. 1	1856 May 31	
Osborn, P. B.	1885 Apr. 1	1885 June 30	
Papillon, J. S.	1879 Aug. 1	1880 July 5	
Payne, Geo.	1853 Jan. 1	1853 Apr. 30	
**Pead, J. A. J.*	1890 Feb. 11	1897 Aug. 12	Established Computer.
Pillans, C. R.	1877 Apr. 1	1879 Jan. 31	
	1879 Aug. 1	1885 Aug. 31	
Rankin, H. B.	1900 Jan. 8	1900 Apr. 30	
Read, Robt.	1849 July 1	1851 Sept. 30	
Reay, G. H.	1892 Apr. 1	1892 May 31	
Reid, J. L.	1882 Oct. 25	1882 Dec. 31	
Richardson, Jas.	1855 Nov. 1	1856 June 30	
Robertson, Jas.	1830 Dec. 1	‡	
Robinson, W. B.	1883 July 1	1888 Dec. 31	
Rosenthal, Richd.	1891 Aug. 20	1892 Feb. 29	
Routledge, T.	1890 Feb. 1	1890 Apr. 15	
Rowe, V. E. S.	1894 Feb. 1	1894 Dec. 15	
Sales, Douglas	1901 Jan. 1	1901 Dec. 14	
Sawerthal, Henry	1885 Sept. 1	1889 Nov. 20	
†*Scragg, Fredk. H.*	1905 July 27	Date.	
Selden, Fredk.	1848 Apr. 1	1849 June 30	
Simmons, E. (B.A.)	1895 June 1	1896 Feb. 29	
Simms, Alex.	1891 June 1	1893 Jan. 31	
Simpson, Jas. Alex.	1903 Nov. 1	1907 Aug. 15	Established Computer.
Sinfield, John C.	1861 Feb. 1	1871 Sept. 18	Died in office.
Smith, Sheldon C.	1852 June 1	1852 Oct. 31	
Stevens, Callcott M.	1868 Aug. 1	1873 June 12	Antedated to 1871 Oct. 17 as 3rd Assistant.
Stevens, Chas.	1871 Dec. 1	1876 Jan. 31	
Stoltenhoff, G.	1877 Nov. 19	1878 June 30	
Tarbutt, C. E.	1856 Aug. 1	1856 Oct. 31	
Theal, M. W.	1880 Dec. 20	1883 Feb. 3	
Trill, Maud M.	1895 Apr. 15	1895 Sept. 30	To Astrographic work.
Venner, Joseph J.	1848 Apr. 1	1855 June 30	
	1856 Aug. 1	1882 Oct. 31	
Vincent, L. A.	1855 June 1	1855 Sept. 30	
Vogelmann, A.	1885 Sept. 1	1886 Jan. 31	
Warnall, F. G.	1856 June 1	1856 June 30	
**Whittingdale, Wm.*	1902 Jan. 18	1907 Aug. 20	Established Computer.
**Wilkin, Albert J.*	1900 Nov. 24	1902 Sept. 17	Established Computer.
		1901 Dec. 9	Antedated.
Wilkinson, Herbert A.	1855 Aug. 1	1856 June 30	
Williams, Raleigh M.	1905 Feb. 1	1909 Nov. 15	
Williams, Fredk.	1910 Jan. 1	Date.	
Wilson, H.	1902 Oct. 1	1902 Oct. 31	
Wingrove, Wm.	1851 Oct. 1	1854 Mar. 31	
Wood John (M.A.)	1895 Dec. 16	1896 Dec. 6	
Wood, John Calder	1903 Aug. 1	Date.	
**Woodgate, Robt.*	1890 Mar. 25	1897 Aug. 12	Established Computer.
Wren, G.	1889 Jan.	1889 Jan.	
Wright, George	1897 June 1	1898 Mar. 31	
Wright, J. W.	1883 July 1	1884 Jan. 31	

* Previously served as Computer at Royal Observatory, Greenwich.
† Previously served as Computer at University Observatory, Oxford.
‡ For temporary service till the arrival of Lieut. Meadows.

Observers in italics.

Digitized by Google

Ladies employed on Astrographic Measures, etc.

Name.	From.	To.	Name.	From.	To.
Backwell, M. S.	1905 Sept. 1	Date.	Maclear, N.	1902 Oct. 1	1904 May 31
Berry, L.	1903 May 16	1903 Dec. 31		1906 Mar. 1	1909 June 30
Bowman, M.	1897 Jan. 16	1902 Mar. 27	‡Ness, D.	1902 Apr. 1	1902 Nov. 12
Bergh, S. B.	1899 July 1	1902 Mar. 31	Rolls, S.	1898 Sept. 19	1898 Dec. 31
Coates, M.	1902 Sept. 1	Date.	Speight, E.	1899 Feb. 1	1901 Dec. 30
Crosby, N.	1904 Apr. 1	1905 Nov. 15	Stephens, M.	1897 July 1	1899 Jan. 31
	1906 Apr. 1	Date.		1902 Apr. 1	Date.
Eedes, M.	1899 Nov. 6	1902 Mar. 31	‡Stephens, T.	1895 Oct. 16	1897 Mar. 31
‡Gatty, B.	1897 Apr. 14	1897 June 30	Straith, E.	1901 Sept. 9	1907 Feb. 28
Halkett, C.	1897 Nov. 1	1900 Feb. 28	‡Trill, M. M.	1895 Oct. 1	1896 Dec. 31
Holtzer, I.	1899 May 19	1900 Sept. 30	Twamley, H.	1906 Jan. 1	Date.
Hutcheon, J.	1899 Feb. 6	1902 Mar. 31	Van der Lingen, E.	1902 Mar. 1	Date.
Jackson, M.	1904 Dec. 1	1905 Feb. 25	Warren, E.	1900 Oct. 1	1901 July 31

‡ Did not measure.

Mechanicians.

Names.	From.	To.	Remarks.
Miller, Thos.	1898 July 9	1903 Nov. 13	Supernumerary. Optical Fitter.
	1903 Nov. 14	Date.	Established. ,,
Baines, Alfd.	1903 June 8	Date.	Supernumerary. Artificer.

Labourers, etc.

Scully, Rev.	1822*	1822 Nov. 19	Established. Became Assistant. Dismissed.
Fayrer, Jas.	1822 Nov. 20	1834 Sept. 30	,, Was Assistant. Dismissed.
Bowler, Thos.	1834 Oct. 1	1835 July 8	,, Labourer. Dismissed.
Harrison, J.	1835 Aug. 1	1836 Sept. 30	,, Dismissed.
Auret, Benedictus	1836 Oct. 1	1837 Jan. 31	,,
Gibbs, Joseph	1837 Jan. 1	1878 Aug. 3	,, Carpenter.
Munns, G.	1878 Sept. 1	1879 June 4	Supernumerary. Carpenter.
Bergsma, D.	1879 June 6	1880 Sept. 30	,, Carpenter.
Chaplin, Jno.	1880 Oct. 1	1888 May 6	,, Carpenter (transferred to D. W. D., May 7).
Rice, Jonathan	1888 June 9	1895 June 30	,, Artificer.
Boswell, W. J.	1895 July 1	1901 May 8	,, Artificer.
Short, Jas.	1901 May 20	Date.	,, Stoker.
Kingston, R.	1902 Sept. 6	1903 May 23	Established. Electrical Fitter.

* Employment sanctioned by Admiralty Letter of 1822 April 8. Two Kroomen 1880 November to 1900 December 17; three from 1900 December 18.

Visits of Astronomers.†

Auwers, A.	1889 May 24 to 1889 September 5	(see p. lxxii).
Baldwin, J. M.	1906 July 18 to 1907 January 28	(see p. clxii).
Cookson, Bryan	1901 March 26 to 1903 March 15, and in 1905	(see p. xc), visit of B. A.
Elkin, W. E.	1881 January 31 to 1883 May 16	(see pp. xxxix and xl).
Franklin-Adams, J.	1903 July 28 to 1904 March	(see p. clviii).
Jacoby, H.	1890 January 18 to 1890 August 13	(see p. cl).
M'Clean, Frank	1897 May 18 to 1897 October 27	(see p. cxxxix).
Perry, Rev. S. J.	1874 July 20 to 1874 September 17, 1882. Transit of Venus	(see p. cxlvi).
Sidgreaves, Rev. W.	,, ,, ,,	
Marth, A.	1882 ,, ,, ,,	
Newcomb, S.	1882 ,, ,, ,,	
Abbe, Cleveland.	1890 January 18 to 1890 February 5. Eclipse "Pensacola"	(see p. cl).
Preston, E. D.	,, ,, ,,	
Todd, D. P.	,, ,, ,,	

† See also p. clxi for names of Astronomers who inspected the Observatory during the visit of the British Association to South Africa in 1905.

Digitized by Google

APPENDIX II.

CAPE OBSERVATORY PUBLICATIONS.

MERIDIAN OBSERVATIONS.

1829–1831.	Published in *R.A.S. Memoirs*, vol. 19	4to.	London,	1851.
1832–1833.	„ „ „ „ 15	4to.	London,	1846.
1834.	Separate Publication	4to.	Cape Town,	1840.
1835.	„ „	4to.	Cape Town.	
1836.	„ „	4to.	Cape Town.	
1837 (S.P.D.).	„ „	4to.	Cape Town.	
1856.	„ „	8vo.	Cape Town,	1871.
1857–1858.	„ „	8vo.	Cape Town,	1872.
1859–1860.	„ „	8vo.	Cape Town,	1874.
1861–1865.	„ „	8vo.	London,	1897.
1866–1870.	„ „	8vo.	Edinburgh,	1900.
1871–1873.	„ „	8vo.	Cape Town,	1876.
1874.	„ „	8vo.	Cape Town,	1877.
1875.	„ „	8vo.	Cape Town,	1877.
1876.	„ „	8vo.	Cape Town,	1879.
1877.	„ „	8vo.	Edinburgh,	1901.
1878–1879.	„ „	8vo.	Edinburgh,	1901.
1879–1881.	„ „	8vo.	London,	1883.
1882–1884.	„ „	8vo.	London,	1887.
1885–1887.	„ „	Folio.	London,	1894.
1888–1889.	„ „	Folio.	London,	1895.
1890–1891.	Separate Publication and Appendix (Star Correction Tables)	Folio.	London,	1895.
1892–1895.	„ „ „ „ „	Folio.	London,	1896.
1896–1897.	„ „ „ „ „	Folio.	Edinburgh,	1901.
1898–1899.	„ „ „ „ „	Folio.	Edinburgh,	1901.
1900–1904.	„ „ „ „ „	Folio.	Edinburgh,	1906.

HELIOMETER OBSERVATIONS.

1881–1883.	4to	London,	1893.

ANNALS.

Vol. I. (Complete):—

Part 1. Observations of Comets, 1880–1894	4to.	London,	1898.
Part 2. Telegraphic Operations connecting Aden and the Cape of Good Hope, 1881–1882	4to.	London,	1884.
Part 3. Telegraphic Determinations of the Longitudes of Lorenço Marques, Mozambique, and Zanzibar, and the Longitude of Quilimane	4to.	London,	1884.
Part 4. Occultations of Stars by the Moon, 1835–1880	4to.	London,	1884.
Part 5. Variations of Instrumental Adjustments of the Cape Transit Circle	4to.	London,	1885.

Vol. II. (Complete):—

Part 1. Observations of the Great Comet of 1882	4to.	London,	1886.
Part 2. Reference Catalogue of Southern Double Stars	4to.	Edinburgh,	1899.
Part 3. Occultations of Stars by the Moon, 1881–1895	4to.	Edinburgh,	1901.
Part 4. Micrometrical Measurements of Double Stars, 1849–1868 and 1899–1903	4to.	Edinburgh,	1905.
Part 5. Results of Meridian Observations of the Sun, Mercury, and Venus, 1884–1892	4to.	Edinburgh,	1907.
Part 6. Occultations of Stars by the Moon, 1896–1906	4to.	Edinburgh,	1907.

Vol. III. (Complete):—

Cape Photographic Durchmusterung (vol. 1)	4to.	London,	1896.

Digitized by Google

ANNALS—*continued.*

Vol. IV. (Complete):—			
Cape Photographic Durchmusterung (vol. 2)	4to.	London,	1897.
Vol. V. (Complete):—			
Cape Photographic Durchmusterung (vol. 3)	4to.	London,	1900.
Vol. VI. (Complete):—			
Solar Parallax from Heliometer Observations of Minor Planets	4to.	London,	1897.
Vol. VII. (Complete):—			
Solar Parallax from Observations of Iris, Victoria and Sappho	4to.	London,	1896.
Vol. VIII.:—	4to.	Edinburgh,	1909.
Part 1. Heliometer Observations of Major Planets	4to.	Edinburgh,	1900.
Part 2. Researches on Stellar Parallax made with the Cape Heliometer			
Vol. IX.:—			
Parts 1, 2, and 3. Revision of the Cape Photographic Durchmusterung	4to.	Edinburgh,	1903.
Vol. X.:—	4to.	Edinburgh,	1911.
Part 1. Determination of Radial Velocities	4to.	Edinburgh,	1906.
Part 2. Spectra of Silicon, Fluorine, and Oxygen	4to.	Edinburgh,	1909.
Part 3. A Spectrographic Determination of the Constant of Aberration and of the Solar Parallax			
Vol. XI.:—	4to.	Edinburgh,	1905.
Part 1. Heliometer Triangulation of the Southern Circumpolar Area	4to.	Edinburgh,	1905.
Part 2. Catalogue of 917 Circumpolar Stars			
Vol. XII.:—			
Part 1.	4to.	Edinburgh,	1906.
Part 2. Determination of the Mass of Jupiter and Orbits of the Satellites	4to.	Edinburgh,	1906.
Part 3. Determination of the Inclinations and Nodes of the Orbits of Jupiter's Satellites	4to.	Edinburgh,	1907.
Part 4. Determination of the Elements of the Orbits of Jupiter's Satellites			

CAPE CATALOGUES OF STARS FOR THE EQUINOX.

1840.	8vo.	Cape Town,	1878.
1850.	8vo.	London,	1883.
1860.	8vo.	Cape Town,	1873.
1865.	8vo.	London,	1899.
1880.	Folio.	London,	1881.
1885.	Folio.	London,	1894.
1890.	Folio.	London,	1898.
1900. General	Folio.	Edinburgh,	1906.
1900. Astrographic	Folio.	London,	1906.
1900. (1905–1906).	Folio.	Edinburgh,	1907.
Places of 8 close Southern Circumpolar Stars	8vo.	Cape Town,	1874.
Catalogue of 87 Southern Circumpolar Stars for 1882	8vo.	Cape Town,	1882.
Catalogue of 2798 Zodiacal Stars for the Equinox 1900	8vo.	London,	1899.

INDEPENDENT DAY NUMBERS.

1897–1912.	8vo.	London,	1897–1909.

REPORTS TO THE SECRETARY OF THE ADMIRALTY.

1850.	1893–1905. Published yearly	4to.	London, 1851–1910.
1854–1855.	1906–1907.		
1879–1889.	1908.		
1889–1892.	1909.		

LONGITUDES.

Difference of Longitude between the Observatories of Madras and the Cape of Good Hope, from corresponding Moon-culminating Observations. *R.A.S. Mem.*, xii. pp. 133–140.

Longitude of Grahamstown	8vo.	Cape Town,	1850.
Telegraphic Determinations of Longitudes on the West Coast of Africa	Folio.	London,	1891.
Telegraphic Determination of the Longitude of St Helena	Folio.	London,	1906.
Telegraphic Determination of the Longitude of Accra	Folio.	London,	1906.
Report on Determination of Difference of Longitude, Greenwich-Ascension-Cape	Folio.	London,	1908.

REPORTS ON THE GEODETIC SURVEY OF SOUTH AFRICA.

Verification and Extension of La Caille's Arc of Meridian at the Cape of Good Hope, by Sir Thomas Maclear. 2 vols.	4to.	London,	1866.
Vol. I.—Report on the Geodetic Survey of South Africa, executed by Lieut.-Col. Morris in the years 1883–1892, together with a Re-discussion of the Survey, executed by Sir Thomas Maclear in the years 1841–1848	Folio.	Cape Town,	1896.
Vol. II.—Report on a Re-discussion of Bailey's and Fourcade's Surveys and their Reduction to the System of the Geodetic Survey	Folio.	Cape Town,	1901.
Vol. III.—Report on the Geodetic Survey of Southern Rhodesia	Folio.	Cape Town,	1905.
Vol. IV.—Report on the Boundary Survey between British Bechuanaland and German South-West Africa	Folio.	Berlin,	1906.
Vol. V.—Reports on the Geodetic Survey of the Transvaal and Orange River Colony, executed by Col. Sir W. G. Morris, and of its Connection, by Capt. H. W. Gordon, R.E., with the Geodetic Survey of Southern Rhodesia	Folio.	London.	1908.

Digitized by Google

APPENDIX III.

SCIENTIFIC PAPERS PUBLISHED BY ASTRONOMERS AT THE CAPE OBSERVATORY OTHER THAN THOSE CONTAINED IN CAPE OBSERVATORY PUBLICATIONS.

FALLOWS, REV. FEARON.

Communication of a curious appearance (luminous spot) lately observed upon the Moon. *Phil. Trans.*, 1822, pp. 237–238.

An account of some Parhelia seen at the Cape of Good Hope. *Quart. Journ. Sci.*, xvi., 1823, pp. 365–366.

A catalogue of nearly all the principal fixed stars between the zenith of Cape Town, Cape of Good Hope, and the South Pole, reduced to the 1st of January 1824. *Phil. Trans.*, 1824, pp. 457–470.

An easy method of comparing the time indicated by any number of chronometers with the given time at a certain station. *Quart. Journ. Sci.*, xvii., 1824, pp. 315–316.

Observations made with the invariable pendulum (No. 4 Jones) at the Royal Observatory, Cape of Good Hope, for the purpose of determining the compression of the earth. *Phil. Trans.*, 1830, pp. 153–176.

HENDERSON, THOMAS.

On the latitude and longitude of the Cape Observatory. *R.A.S. Mon. Not.*, ii. pp. 183–185; *R.A.S. Mem.*, vi. pp. 125–132; viii. pp. 137–140.

Positions of stars near the South Pole, from observations made at the Cape of Good Hope. *R.A.S. Mon. Not.*, ii. pp. 185–186; *R.A.S. Mem.*, vi. pp. 133–136.

Observations of the periodic Comet of 67 years, made at the Observatory, Cape of Good Hope, between 18th November 1832 and 3rd January 1833. *R.A.S. Mem.*, vi. pp. 159–168.

Observations of the Moon and Stars, made with the mural circle at the Cape of Good Hope, for the determination of the Moon's parallax. *R.A.S. Mem.*, vi. pp. 205–206; viii. p. 232.

Observations of Mars and Stars, made with the mural circle at the Cape of Good Hope, for the determination of the parallax of Mars. *R.A.S. Mem.*, vi. pp. 207–215.

Observations on the Comet of Encke, made in June 1832. *Phil. Trans.*, pp. 549–558.

On the mural circle of the Observatory at the Cape of Good Hope. *R.A.S. Mon. Not.*, iii. pp. 57–59; viii. pp. 141–168.

Observations made at the Cape. *Astr. Nachr.*, xi. col. 293–298.

Letter to Professor Airy, on the Sun's parallax, as deduced from various observations made at Greenwich, Cambridge, and the Cape of Good Hope. *R.A.S. Mem.*, viii. pp. 95–104.

Places of the Comet of Biela, deduced from observations at Slough and the Cape of Good Hope. *R.A.S. Mem.*, viii. pp. 240–242.

Places of Encke's Comet from observations made at the Cape of Good Hope and at Buenos Ayres. *R.A.S. Mem.*, viii. p. 243.

Notes to M. Mosotii's observations of the Comet of Encke. *R.A.S. Mem.*, viii. pp. 244–250.

The constant quantity of the Moon's equatorial horizontal parallax, deduced from observations made at Greenwich, Cambridge, and the Cape of Good Hope in 1832 and 1833. *R.A.S. Mon. Not.*, iv. pp. 92–94; *R.A.S. Mem.*, x. pp. 283–294.

On the parallax of α Centauri. *R.A.S. Mon. Not.*, iv. pp. 168–170; *R.A.S. Mem.*, xi. pp. 61–68; *Bibl. Univ.*, xxi. pp. 391–393.

Observations at the Cape. *Astr. Nachr.*, xiv. col. 81–96, 103–106.

Refraction of stars near the horizon, observed at the Cape of Good Hope. *R.A.S. Mem.*, x. pp. 271–282.

On the parallax of Sirius. *R.A.S. Mon. Not.*, v. pp. 5–7; *R.A.S. Mem.*, xi. pp. 239–248.

On the determination of the parallax of α Centauri, by recent observations made by Mr. Maclear at the Cape of Good Hope in 1839–40. *R.A.S. Mon. Not.*, v. pp. 171–172; *R.A.S. Mem.*, xii. pp. 329–372.

The parallax of α Centauri deduced from Mr. Maclear's observations at the Cape of Good Hope in the years 1839 and 1840. *R.A.S. Mon. Not.*, v. pp. 182–183.

On the parallaxes of certain Southern Stars. *R.A.S. Mon. Not.*, v. pp. 223–225.

MACLEAR, SIR THOMAS.

Observations on Halley's Comet. *R.A.S. Mon. Not.*, iv. pp. 73–74; *R.A.S. Mem.*, x. pp. 91–156.

On the position of La Caille's stations at the Cape. *R.A.S. Mon. Not.*, iv. pp. 189–194; *R.A.S. Mem.*, xi. pp. 91–138.

Stars to be observed for refraction at Greenwich, Palermo, and the Cape of Good Hope. *Astr. Nachr.*, xiv. col. 145–148.

An account of the fall of a meteoric stone at Cold Bokkeveld, Cape of Good Hope. *Phil. Trans.*, 1839, pp. 83–85.

Observations made at the Cape of Good Hope in the year 1838, with Bradley's Zenith Sector, for the verification of the amplitude of the Abbé de La Caille's Arc of Meridian. *Roy. Soc. Proc.*, iv. pp. 192–193; *R.A.S. Mon. Not.*, v. pp. 45–48.

Further particulars of the fall of the Cold Bokkeveld meteorolite. *Phil. Trans.*, 1840, pp. 177–182.

Observations of the Comet of Encke, May 1842. *R.A.S. Mon. Not.*, vi. pp. 68–69; *R.A.S. Mem.*, xv. pp. 211–228.

Observations of the second Comet of Mauvais. *R.A.S. Mon. Not.*, vi. pp. 148–150, 200–201, 218–219, 231–234, 250–251; *Astr. Nachr.*, xxii col. 349–352; *R.A.S. Mem.*, xv. pp. 244–250.

Digitized by Google

Observations of the great Comet of 1844–45. *R.A.S. Mon. Not.*, vi. pp. 213–214, 234–235, 252–254 ; *R.A.S. Mem.*, xv. pp. 251–256 ; *Astr. Nachr.*, xxiii. col. 141–144, 173–176.

Duplicity of Biela's Comet. *R.A.S. Mon. Not.*, vii. pp. 99–100.

Remeasurement of La Caille's arc. *Astr. Nachr.*, xxiv. col. 359–364.

Observations of Uranus. *R.A.S. Mon. Not.*, ix. p. 6.

Observations of Neptune. *R.A.S. Mon. Not.*, ix. pp. 7–8.

Observations of Wilmot's Comet. *R.A.S. Mon. Not.*, ix. pp. 130–132.

Mean places of the stars which were compared with Mauvais' Comet at the Royal Observatory, Cape of Good Hope, in the years 1844, 1845, reduced to 1st January 1845. *R.A.S. Mem.*, xvii. pp. 107–110.

Observations of Gambart's (Biela's) Comet. *R.A.S. Mon. Not.*, x. pp. 8–15 ; *Astr. Nachr.*, xxx. col. 103–112, 113–114.

Opposition of Mars in 1849–50. *R.A.S. Mon. Not.*, x. pp. 156–158.

Micrometrical Measures of Double Stars. *R.A.S. Mon. Not.*, xi. pp. 39–40.

Determination of the parallax of α_1 and α_2 Centauri. *R.A.S. Mon. Not.*, xi. pp. 131–132 ; *R.A.S. Mem.*, xx. pp. 70–98 ; *Astr. Nachr.*, xxxii. col. 243–244.

Report of Her Majesty's Astronomer. *R.A.S. Mem.*, xx. pp. 1–30.

Particulars relating to the mounting of two equatoreal instruments in 1847 and 1849. *R.A.S. Mem.*, xx. pp. 31–41.

Comparison of the southern stars of the British Association Catalogue with the heavens, for the detection of errors ; with the method of conducting the examination. *R.A.S. Mem.*, xx. pp. 42–61 ; xxi. pp. 121–135.

Observations of the Comet of 1843, re-examined and reduced. *R.A.S. Mem.*, xx. pp. 62–69.

Opposition of Mars, 1849–50. *R.A.S. Mem.*, xx. pp. 99–114.

On the parallax of β Centauri. *R.A.S. Mem.*, xxi. pp. 141–152 ; *R.A.S. Mon. Not.*, xii. p. 174.

Observations of Petersen's Comet, made between 6th September and 15th October 1850. *R.A.S. Mem.*, xxi. pp. 136–140.

Opposition of Mars, 1851–52. *R.A.S. Mem.*, xxi. pp. 153–156.

Observations of Comet II. 1853. *R.A.S. Mon. Not.*, xii. pp. 274–275 ; xiv. pp. 1–8 ; Gould, *Astron. Journ.*, iv. pp. 73–75.

Observations of the Comet I. 1850. *Astr. Nachr.*, xxxvi. col. 181–186.

On the observations of Schweizer's Comet (Comet II. 1853). *R.A.S. Mon. Not.*, xv. pp. 73–79.

Micrometrical Measures of Antares. *R.A.S. Mon. Not.*, xvi. pp. 222–223.

Observations of Klinkerfues' Comet. Gould, *Astron. Journ.*, iv. pp. 121–125 ; *R.A.S. Mem.*, xxxi. pp. 1–17.

Observations de la Comète de M. D'Arrest. Paris, *Comptes Rendus*, xlvii. pp. 967–970.

Right Ascensions and North Polar Distances of D'Arrest's Comet. *R.A.S. Mon. Not.*, xix. pp. 45–47.

Mean R.A. and N.P.D. of the stars compared with D'Arrest's Comet, 1857–58, and apparent places for the day of observation. *R.A.S. Mon. Not.*, xix. pp. 48–49.

Observations of Donati's Comet, made between 11th October 1858 and 4th March 1859. *R.A.S. Mem.*, xxix. pp. 59–84.

Encke's Comet. Calculation of the Comet's Geocentric Right Ascensions and North Polar Distances, from observations made at the Royal Observatory, Cape of Good Hope. *R.A.S. Mem.*, xxxi. pp. 19–28.

Right Ascensions and North Polar Distances of Comet III. 1860, deduced from observations made with the $8\frac{1}{2}$-feet equatoreal. *R.A.S. Mem.*, xxxi. pp. 29–39.

Right Ascensions and North Polar Distances of Comet I. 1861, from observations made at the Royal Observatory, Cape of Good Hope. *R.A.S. Mem.*, xxxi. pp. 41–42.

Geocentric North Polar Distances of the Moon and Moon-culminating Stars, deduced from observations made with the transit circle in the years 1856–62. *R.A.S. Mem.*, xxxiii. pp. 1–60 ; xxxiv. pp. 25–34.

Right Ascensions and North Polar Distances of Comet I. 1865, derived from observations made with the $8\frac{1}{2}$ feet equatoreal. *R.A.S. Mem.*, xxxiv. pp. 35–44.

Geocentric Right Ascensions and North Polar Distances of Encke's Comet, deduced from observations made at the Royal Observatory, Cape of Good Hope. *R.A.S. Mem.*, xxxii. pp. 1–3.

Right Ascensions and North Polar Distances of Comet II. 1862. *R.A.S. Mem.*, xxxii. pp. 193–198.

Mean North Polar Distances of Rigel, α Orionis, Sirius, and α Hydræ for January 1 of each year, derived from observations with the transit-circle in the years 1856–63. *R.A.S. Mem.*, xxxv. pp. 1–16.

Geocentric Right Ascensions and North Polar Distances of Encke's Comet, derived from observations made at the Royal Observatory, Cape of Good Hope. *R.A.S. Mem.*, xxxv. pp. 17–20.

Results from Meteorological Observations made at the Royal Observatory, from 1st January 1842 to 31st December 1861. *Brit. Meteor. Soc. Proc.*, iv. pp. 286–289.

STONE, EDWARD JAMES.

A determination of the Sun's mean equatoreal horizontal parallax, from declination-observations of Mars and stars, made during the opposition of 1862, at the Royal Observatory, Greenwich ; the Royal Observatory, Cape of Good Hope ; and the Government Observatory, Williamstown, Victoria. *R.A.S. Mem.*, xxxiii. pp. 77–102.

On an approximately decennial variation of the temperature at the Observatory at the Cape of Good Hope between the years 1841 and 1870, viewed in connection with the variation of the Solar Spots. *Roy. Soc. Proc.*, xix. pp. 389–392 ; *Phil. Mag.*, xlii. pp. 72–75.

Phenomena of contact. *Nature*, v. pp. 182–183.

An experimental determination of the velocity of sound. *Phil. Trans.*, clxii. pp. 1–6 ; *Roy. Soc. Proc.*, xx. pp. 34–35 ; *Phil. Mag.*, xliii. pp. 153–154.

Mean places for 1871, January 1, of 78 stars near the South Pole, observed in the year 1871. *R.A.S. Mon. Not.*, xxxiii. pp. 55–57.

On an observed discordance between the reading for Zenith-Point in the determinations with the transit-circle of the Royal Observatory, Cape of Good Hope. *R.A.S. Mon. Not.*, xxxiii. pp. 169–173.

On the most probable result which can be derived from a number of direct determinations of assumed equal value. *R.A.S. Mon. Not.*, xxiii. pp. 570-572.

On the rejection of discordant observations. *R.A.S. Mon. Not.*, xxxiv. pp. 9–15.

Observations of the Total Solar Eclipse of April 16, 1874, at Klipfontein, Namaqualand, South Africa. *R.A.S. Mon. Not.*, xxxiv. pp. 399–401.

Observations of Coggia's Comet (III. 1874). *R.A.S. Mon. Not.*, xxxiv. p. 490.

Results of magnetical observations made in Little Namaqualand during a part of the months of April and May 1874. *Roy. Soc. Proc.*, xxiii. pp. 553–563.

The Total Eclipse of the Sun, 1874 April 16. *R.A.S. Mem.*, xlii. pp. 35–57.

Digitized by Google

Proper motions of 406 southern stars. *R.A.S. Mem.*, xlii. pp. 129–145.

On a supposed variability of the proper motion of B.A.C. 793. *R.A.S. Mon. Not.*, xxxvi. pp. 257–258.

On the proper motions of the two components of the binary system *a* Centauri. *R.A.S. Mon. Not.*, xxxvi. pp. 258–265.

On the most probable result which can be derived from a number of direct determinations with assigned weights. *R.A.S. Mon. Not.*, xxxvi. pp. 290–292.

Sur le principe de la moyenne arithmétique. (In English.) *Astr. Nachr.*, lxxxviii. cols. 61–64.

On some phenomena of the internal contacts common to the Transits of Venus, observed in 1769 and 1874, and some remarks thereon. *R.A.S Mon. Not.*, xxxvii. pp. 45–55.

On apparent brightness as an indication of distance in stellar masses. *R.A.S. Mon. Not.*, xxxvii. pp. 232–237.

On a cause for the appearance of bright lines in the spectra of irresolvable star-clusters. *Roy. Soc. Proc.*, xxvi. pp. 156–157; *Journ. de Physique*, vii. pp. 199–200.

On a cause for the appearance of bright lines in the spectra of irresolvable star-clusters. (Reply to Dr Huggins.) *Roy. Soc. Proc.*, xxvi. pp. 517–519.

On a cause for the appearance of bright lines in the spectra of irresolvable star-clusters. (Reply to Mr Proctor.) *R.A.S. Mon. Not.*, xxxviii. pp. 106–108.

On the telescopic observations of the Transit of Venus, 1874, made in the Expedition of the British Government, and on the conclusions to be deduced from these observations. *R.A.S. Mon. Not.*, xxxviii. pp. 279–295.

A comparison of the observations of contact of Venus with the Sun's limb in the transit of 1874, December 8, made at the Royal Observatory, Cape of Good Hope, with the corresponding observations made at the stations in the Parliamentary Report, and a discussion of the results. *R.A.S. Mon. Not.*, xxxviii. pp. 341–347.

A comparison between the Right Ascensions and North Polar Distances of the Nautical Almanac and the General Cape Catalogue for 1880. *R.A.S. Mon. Not.*, xl. pp. 57–70.

GILL, SIR DAVID, AND CRAWFORD, JAMES LUDOVIC (EARL OF) (FORMERLY LORD LINDSAY).

On a new driving clock for equatorials. *R.A.S. Mon. Not.*, xxxiv. pp. 35–38.

On the determination of the solar parallax by observations of Juno at opposition. *R.A.S. Mon. Not.*, xxxiv. pp. 279–300.

Note on the results of heliometer observations of the planet Juno, to determine its diurnal parallax. *R.A.S. Mon. Not.*, xxxvii. pp. 308–309.

An experimental determination of the solar parallax from observations of the minor planet *Juno*, made at Mauritius in 1874. *Dun Echt Publications*, Vol. I.

GILL, SIR DAVID.

Note on stars within the trapezium of the nebula in Orion. *R.A.S. Mon. Not.*, xxvii. pp. 315–316.

On the proposed expedition to observe the approaching opposition of Mars. *R.A.S. Mon. Not.*, xxxvii. pp. 310–326.

On the opposition of the minor planet Ariadne as a means of determining the solar parallax. *R.A.S. Mon. Not.*, xxxvii. pp. 327–333.

On the opposition of the minor planet Melpomene as a means of determining the solar parallax. *R.A.S. Mon. Not.*, xxxvii. pp. 412–422.

Reports of his expedition to Ascension. *R.A.S. Mon. Not.*, xxxviii. pp. 2–11, 57–58, 89–90.

Observations of Mars obtained at Ascension between July 31 and September 4 (1877), both inclusive. *R.A.S. Mon. Not.*, xxxviii. pp. 17–21.

On the progress of the reductions connected with the Ascension expedition. *R.A.S. Mon. Not.*, xxxix. pp. 51–72.

On the results of meridian observations of the Mars comparison stars. *R.A.S. Mon. Not.*, xxxix. pp. 98–123.

On observations of *a* Centauri made with the heliometer at Ascension in 1877. *R.A.S. Mon. Not.*, xxxix. pp. 123–126.

On a new method of determining astronomical refractions. *R.A.S. Mon. Not.*, xxxix. pp. 366–368.

On the value of the solar parallax derived from observations of Mars made at Ascension Island during the opposition of 1877. *R.A.S. Mon. Not.*, xxxix. pp. 434–437.

Observations of the great Southern Comet I. 1880, made at the Cape of Good Hope, February 2 to February 15. *R.A.S. Mon. Not.*, xl. pp. 300–301.

Observations of Comet I. 1880, made at the Royal Observatory, Cape of Good Hope. *R.A.S. Mon. Not.*, xl. pp. 623–627.

Account of a determination of the solar parallax from observations of Mars, made at Ascension in 1877. *R.A.S. Mem.*, xlvi. pp. 1–172.

Observations of the Comet *a* 1880. *Astr. Nachr.*, xcviii. cols. 29–30.

On the solar parallax, derived from observations of Mars at Ascension in 1877. *R.A.S. Mon. Not.*, xli. pp. 317–325.

On the best mode of undertaking a discussion of the observations of contact to be made at the approaching Transit of Venus. *R.A.S. Mon. Not.*, xlii. pp. 285–286.

On the effect of different kinds of thermometer screens, and of different exposures, in estimating the diurnal range of temperature at the Royal Observatory, Cape of Good Hope. *Meteorol. Soc. Quart. Journ.*, viii. pp. 238–243.

On the observations of Comets 1881 II. and III. of Well's Comet, and of the great Comet (*b*) 1882, made at the Royal Observatory, Cape of Good Hope. *R.A.S. Mon. Not.*, xliii. pp. 7–19.

Notes on the great Comet (*b*) 1882. *R.A.S. Mon. Not.*, xliii. pp. 19–21.

On photographs of the great Comet (*b*) 1882. *R.A.S. Mon. Not.*, xliii. pp. 53–54; Paris, *Acad. Sci. Compt. Rend.*, xcv. pp. 1342–1343.

On the Victoria and Sappho observations. *Astr. Nachr.*, civ. cols. 55–58.

Note on some criticisms made by Mr Stone on the methods available for determining the solar parallax. *R.A.S. Mon. Not.*, xliii. pp. 307–315.

Note on the nucleus of the great Comet (*b*) 1882. *R.A.S. Mon. Not.*, xliii. pp. 319–321.

Preliminary account of a telegraphic determination of the longitude of the Royal Observatory, Cape of Good Hope. *R.A.S. Mon. Not.*, xliii. pp. 408–419.

Note on Nyrén's determination of the constant of aberration. *R.A.S. Mon. Not.*, xliv. p. 275.

Note to accompany correspondence on the subject of Nyrén's determination of the constant of aberration. *R.A.S. Mon. Not.*, xliv. p. 282.

On systematic errors in the readings of the circle microscopes of the Cape transit circle. *R.A.S. Mon. Not.*, xlv. p. 64.

Reply to Mr Stone's paper on screw errors as affecting the N.P.D. of the Cape Catalogue for 1880. *R.A.S. Mon. Not.*, xlv. p. 432.

Biela's comet. *R.A.S. Mon. Not.*, xlvi. p. 124.

On some suggested improvements in the practical working of M. Loewy's new method of determining the elements of astronomical refraction. *R.A.S. Mon. Not.*, xlvi. p. 325.

Comet Sawerthal (1881 I.). *R.A.S. Mon. Not.*, xlviii. p. 295.

On the occultations of Döllen's lists of stars observed at the Royal Observatory, Cape of Good Hope, during the total eclipse of the Moon, 1888 January 28. *R.A.S. Mon. Not.*, xlviii. p. 297.

On the determination of errors of graduation without cumulative error, and the application of the method to the scales of the Cape heliometer. *R.A.S. Mon. Not.*, xlix. p. 105; *Errata*, xlix. p. 377.

Digitized by Google

Opposition of Mars 1892. *R.A.S. Mon. Not.*, liii. pp. 112–113.

Remarks on the best methods of determining the positions of the planets by observation. *R.A.S. Mon. Not.*, liv. pp. 344–345.

Note on the latitude of the Royal Observatory, Cape of Good Hope. *R.A.S. Mon. Not.*, lv. pp. 34–36.

On the mean places and proper motions for 1900 of twenty-four Southern Circumpolar Stars. *R.A.S. Mon. Not.*, lvii. pp. 532–533.

On the effect of chromatic dispersion of the atmosphere on the parallaxes of α Centauri and β Orionis, and on a method of determining its effect on the value of the solar parallax derived from heliometer observations of minor planets. *R.A.S. Mon. Not.*, lviii. pp. 53–75.

Reply to Dr Rambaut's Note "On the Effect of Chromatic Dispersion." *R.A.S. Mon. Not.*, lviii. pp. 415–425.

On the parallax of Sirius and α Gruis. *R.A.S. Mon. Not.*, lviii. pp. 78–83.

On a new instrument for measuring astrophotographic plates. *R.A.S. Mon. Not.*, lix. pp. 61–72.

Note on the effect of wear on the errors of micrometer screws. *R.A.S. Mon. Not.*, lix. pp. 73–76.

On a method of obtaining perfectly circular dots unaffected by phase, and their employment in determining the pivot errors of the Cape Transit Circle. *R.A.S. Mon. Not.*, lix. pp. 125–135.

The Oxford photographic determinations of stellar parallax. Reply to Professor Turner. *R.A.S. Mon. Not.*, lxi. pp. 513–521.

The great comet of 1901. *R.A.S. Mon. Not.*, lxi. pp. 508–512.

On the investigation of the division errors of the Cape Repsold Measuring Apparatus and the determination of the errors of the Oxford Reseau. *R.A.S. Mem.*, li. pp. 1–27.

On the presence of oxygen in the atmosphere of certain fixed stars. *Roy. Soc. Proc.*, lxv. pp. 196–206.

The spectrum of η Argus. *Roy. Soc. Proc.*, lxviii. p. 456.

On the definitive places of the stars used for comparison with the planet Victoria in the observations for parallax. *Astr. Nachr.*, cxxx. cols. 161–178.

On the reduction of distances from heliometer observations. *Astr. Nachr.*, cxxxi. cols. 185–192.

New variable star in Vela. *Astr. Nachr.*, cxxxv. cols. 43–44.

New southern variable stars. *Astr. Nachr.*, cxliii. cols. 283–286; cxliv. cols. 143–144.

Occultations of stars by the Moon, 1881–1898. *Astr. Nachr.*, cl. cols. 393–428.

Preliminary note on an apparent rotation of the brighter fixed stars as a whole with respect to fainter stars as a whole. *Astr. Nachr.*, clix. cols. 118–122.

A determination of the distance of the Earth from the Sun. *Trans. of South-African Philosophical Society*, vol. 2, part 1.

Determination of the mean distance of the Earth from the Sun. *Trans. of the South-African Philosophical Society*, vol. 8, part 2.

Encyclopædia Britannica, 9th Edition. Articles "Micrometer," "Parallax," and "Telescope."

Recent researches on the distances of the fixed stars, and some future problems in sidereal astronomy. *Royal Institution of Great Britain, Proceedings*, 23rd May 1884.

The applications of photography in astronomy. *Royal Institution of Great Britain, Proceedings*, 3rd June 1887.

Preliminary note on observations of the minor planet Victoria in 1889. *Roy. Soc. Edin. Proc.*, xx. pp. 47–49.

The determination of the solar parallax. *The Observatory*, 1877.

Origin and progress of Geodetic Survey in South Africa. *British Association Report*, 1905.

Presidential Address. *British Association Report*, 1907.

On the different kinds of thermometer screens and of different exposures in estimating the diurnal range of temperature. *Meteorological Soc. Quart. Journ.*, Oct. 1882.

Méthode de montage des plaques sensibles, détermination de leur orientation. *Bulletin du Comité International Permanent pour l'exécution photographique de la Carte du Ciel*, tome i. pp. 7–50.

Exposé d'un projet de M. J. C. Kapteyn relatif à la détermination des mouvements propres et des parallaxes. *Bulletin du Comité International*, tome i. pp. 262–264.

Sur l'orientation de l'axe optique et du plan de la couche sensible. *Bulletin du Comité International*, tome 2, pp. 102–106.

GILL, SIR DAVID, AND W. L. ELKIN.

Heliometer determinations of stellar parallax in the Southern Hemisphere. *R.A.S. Mem.*, xlviii. pp. 1–194.

GILL, SIR DAVID, AND S. S. HOUGH.

Determination of personal equation depending on magnitude, made with the transit circles and the heliometer at the Royal Observatory, Cape of Good Hope. *R.A.S. Mon. Not.*, lxvii. pp. 366–380.

HOUGH, S. S.

The oscillation of a rotating ellipsoidal shell containing fluid. *Phil. Trans.*, clxxxvi. pp. 469–506.

The rotation of an elastic spheroid. *Phil. Trans.*, clxxxvii. pp. 319–344.

(These papers deal with the interpretation of the Chandler period of latitude-variation in relation to the physical structure of the Earth.)

On the application of harmonic analysis to the dynamical theory of the tides. Part 1, *Phil. Trans.*, clxxxix. pp. 201–257; Part 2, *Phil. Trans.*, cxci. pp. 139–185.

On the influence of viscosity on waves and currents. *Proc. Lon. Math. Soc.*, xxviii. pp. 264–288.

On certain discontinuities connected with periodic orbits. *Acta Math.*, xxiv. pp. 257–288.

On the determination of the division errors of a graduated circle. *R.A.S. Mon. Not.*, lxiv. pp. 461–487.

Méthode proposée pour le raccordement des clichés photographiques. *Comité International Réunion*, 1909.

HOUGH, S. S., AND SIR DAVID GILL.

Determinations of personal equation depending on magnitude, made with the transit circles and the heliometer at the Royal Observatory, Cape of Good Hope. *R.A.S. Mon. Not.*, lxvii. pp. 366–380.

HOUGH, S. S., AND SIR GEORGE DARWIN.

Bewegung der Hydrosphäre. *Encyklopädie der mathematischen Wissenschaften.*

HOUGH, S. S., AND J. HALM.

A spectroscopic determination of the systematic motion of the stars. *R.A.S. Mon. Not.*, lxx. pp. 85–103.

On the systematic motions of the Bradley stars. *R.A.S. Mon. Not.*, lxx. pp. 568–588.

Digitized by Google

APPENDIX IV.

THE SOUTH AFRICAN ARC OF MERIDIAN.

By Dr WILHELM BAHN.

[Translated from the original article in *Beiträge zur Geophysik.* Band x. 1910. Printed by the kind permission of Dr Wilhelm Engelmann, Leipzig.]

The measurements made to determine the length of a degree, which were used by Bessel in the year 1841 and by Clarke in 1866 and 1880, in their computation of the dimensions of the earth, are very unequally distributed over the globe. For the most part, they lie in the higher latitudes in Europe, and the solitary measurement of considerable length in lower latitudes is the East Indian. The French Arc of Meridian in Peru does not come into consideration in consequence of its shortness (3°). Moreover, while the European measures mutually supplement each other, the Indian Arc of Meridian is without substantial control, and remains the only measurement of great weight in the vicinity of the equator.

How much this Meridian Arc has influenced the results is seen from the fact that both Bessel's and Clarke's ellipsoid represent it equally well.* But it is precisely in India, on account of the great mountain masses in the north, that considerable disturbances of the plumb-line are to be expected, which may give rise to no inconsiderable errors of amplitude. The dimensions of the earth are, therefore, computed from the results of the measures in such a manner that these errors of amplitude are rendered as small as possible, and the results are, therefore, affected with a systematic error. Although Pratt demonstrated from determination of gravity that the Himalaya Mountains are compensated by a subterranean deficiency of mass, yet, according to Helmert, the doubts which attach to Bessel's and Clarke's results for the ellipsoid, consequent on the influence of the Indian measures, are not set aside.*

For our knowledge of the figure of the earth, it is on this ground of the highest importance to determine the curvature of another Arc of Meridian in a lower latitude. David Gill, the former distinguished Director of the Cape of Good Hope Observatory, suggested the measurement of an Arc in Africa, which should extend along the Meridian 30° E. of Greenwich from the south of Natal to near Cairo; ultimately, the Arc was to be extended thence through Asia Minor and be connected with the Eastern European Arc, so that the whole should embrace 105°.

How high a value this work would possess for Geodesy may be readily understood, since up to the present the most extended Arc of Meridian in existence does not amount to 30°.

The measurements have now advanced from the English side to Lake Tanganyika, and it falls to Germany and to Belgium to continue the work on the boundary of German East Africa and of the Congo State, thence for England to carry it down the Nile to its conclusion. Up to the present, however, so far as is known, no steps have been taken by the German Government to take the measurement in hand, and possibly another decade may elapse before the complete material is before us.

It is, however, of interest to ascertain the curvature of this Arc of Meridian, and, as it has already a length which falls only slightly short of the two European Arcs, it is worth while investigating the curvature for the portion in question.

The Arc of Meridian reaches from S. latitude 9° 41′ to 32° 54′, thus extending over 23° 13′, while the length of the East European Arc is 25° 20′, and of the West European Arc 27° 2′.

The number of Latitude Stations is, however, considerably larger here than in the European Arcs, there being fifty-seven stations against thirteen of the east and thirty-eight of the west European Arcs.

There are, besides, in the southern part, a whole series of determinations of the deviation of the plumb-line, which have not to be taken directly into account in the Meridian Arc, since they are too far distant from the 30th Meridian; but they are, however, together with others, admirably adapted for drawing conclusions as to the arrangements of masses in the earth's crust for those regions.

THE MATERIAL.

(*a*) GEODETIC OBSERVATIONS.

The material on which the following investigation is based is published in the *Reports of the Geodetic Survey of South Africa.*† The first volume deals with the measurements in Cape Colony and Natal, and in addition, the methods are described by which these and all later measurements were carried out.

The triangulation was executed in the years 1883 to 1892, under Gill's direction, by Lieut.-Col. Morris. At the commencement the angles were measured with an 18-inch theodolite by Troughton & Simms. Later on it was realised that this was too elaborate an instrument for convenient transport, and a smaller 10-inch instrument by Repsold of Hamburg was procured, which even surpassed the former instrument in precision. The mean error of an angle measured by the Troughton & Simms theodolite was found in the final triangular errors to amount to 0·73″, whereas that of one measured by the Repsold was only 0·49″. It was, of course, not only the excellence of the instrument, but, above all, the high standard of work, and of the method of observation, which led to these small values.‡

* F. R. Helmert, "Neue Fortschritte in der Erkenntniss der math. Erdgestalt," *Geogr. Zeitschrift von Hettner*, 1900.

† David Gill, *Report on the Geodetic Survey of South Africa*, vol. i., Cape Town, 1896. *Geodetic Survey of South Africa:* vol. iii., *Report on the Geodetic Survey of part of Southern Rhodesia*, Cape Town, 1905. Vol. v., *Reports on the Geodetic Survey of the Transvaal and Orange River Colony*, London, 1908.

‡ The lower accuracy of the results obtained with the 18-inch theodolite was not due to any inferiority of the instrument as compared with the 10-inch, but to improved methods of working the latter. When the 18-inch was employed in the verification of the Natal Base, with all necessary precautions, the *probable error* of a single angle proved to be only ±0″·139. (*Geod. Survey of South Africa*, vol. i., p. [75]). D.G.

Digitized by Google

Every precaution was taken to detect errors. For determining the length of the sides, three base-lines were measured, two of which are utilised for the Meridian Arc, and, for the measurement of these, steel bars of 10 feet (= 3·047 m.) in length were employed. These were enclosed in mahogany cases, from which only their ends projected.

The mean error of the base-lines, as deduced from the probable errors specified by Gill, is $\frac{1}{820.000}$. The entire system is so adjusted that all measured base-lines agree with those computed from the chains of triangles, and all connections agree. Vol. III. of the Geodetic Survey contains the survey of South Rhodesia made by Simms in the years 1897–1901.

The angles were measured with the Repsold instrument, and their accuracy is almost identical with that obtained in the Cape Colony, viz. :—mean error = ± 0·50″.

Two base-lines were measured with Jäderin Invar wires, which permitted the length of the extended base-lines to be determined in a comparatively short time. No statement is made as to the accuracy, but it will agree with those of later operations.

The survey of the Transvaal and Orange Colony, under Colonel Morris's direction, was completed in the years 1903–1904, and is published in Vol. V. of the Geodetic Survey. The angular measurements were made by the same methods as in Rhodesia, and the mean error of an angle measured eight times was 0·45″, and that of one measured four times was 0·58″.

For determination of the length of the sides five base-lines were measured, two of which were situated near the 30th meridian. The measurement was made with Jäderin Invar wires. For an average length of base-line of 22 km., the mean error amounts to $\frac{1}{510.000}$ of the length.

The triangulation in the Transvaal and Orange Colony is regarded as a continuation of the original one, and so adjusted as to form with it a uniform system in which the old chain of triangles remain unaltered.

In order to have a standard by which to judge the degree of accuracy obtained, the mean errors of a single angle in the best surveys are brought together in the following table. According to the resolutions of the International Geodetic Commission the measure of accuracy is expressed by :

$$m = \pm\sqrt{\frac{\Sigma\,\Delta^2}{3\,n}}$$

where Δ represents the triangular error and n the number of triangles.

Locality.	Epoch.	n.	m.
Saxony	1867–1877	197	0·35″
South Africa (10-inch Repsold)	1883–1905	526	0·50
Prussia	1832–1891	706	0·53
France	1884–1891	186	0·56
Russia	...	146	0·64
Japan	1885–1898	345	0·66
South Africa (18-inch Troughton & Simms)	...	100	0·73
Mecklenburg	1818–1860	69	1·16
German South-West Africa	1906–1907	41	1·29
Great Britain	1787–1865	552	1·83

It will be seen from the above that the angular measures in South Africa are, up to the present, among the best available observations in this class of work. It is, therefore, now desirable to determine from the reports on the accuracy of the angular and base measurements, the mean error of the entire extent of the chain of triangles of the Arc of Meridian, in order to be able to determine finally the influence which errors of the geodetic observations can exert upon the final results. But while, in similar investigations, the errors arising from the measurement of length as opposed to those accruing from the angular measures are neglected, this simplification cannot here be adopted without further consideration, because the mean error of the base-lines, as compared with those of angle, appear to be fairly large.

According to Jordan,* the relative error of a chain of triangles, arising from angular measure, that is to say, the relation of the error to the length is

$$m = \frac{\mu}{\rho}\,\frac{1}{3}\sqrt{v}$$

where μ = mean error of an angle of a triangle

$$\rho = \frac{1}{\text{arc } 1''} = 206{,}265$$

v = number of triangles.

This formula holds good approximately for the ideal case, in which the base lies in the centre of a chain consisting of true equilateral triangles, and where the number of triangles is very large.

The triangular chain of the Arc of Meridian consists of about 150 triangles, and possesses 7 base-lines which are fairly uniformly distributed, so that about 21 triangles fall on the average on one base-line. Consequently, for the part of the chain of triangles depending on a single base-line :—

$$m = \frac{0{\cdot}5}{206{,}265}\,\frac{1}{3}\sqrt{21} = \frac{1}{275{,}000}.$$

For the whole chain of triangles of sevenfold elongation

$$m = \frac{1}{275{,}000}\sqrt{7} = \frac{1}{104{,}000}.$$

This value, which naturally only represents a rough estimate, suffices in the present instance.

The error arising from the base measurements can be still less exactly ascertained. Upon the first triangle side of the triangulation, the so-called enlarged base, the errors of measurement of length come in with considerably increased magnitude ; in the case of the short primary base-lines in Cape Colony we may at least accept the fourfold if this measurement is compared with others in which the circumstances are similar.†

* W. Jordan, *Handbuch der Vermessungskunde*, Band iii.

† *Verhandlungen der internationalen Erdmessung zu Stuttgart*, 1898, Bericht von Gen. Ferrero.

Digitized by Google

The relative side error of the extended base-lines in Cape Colony is thus about

$$\frac{1}{150{,}000.}$$

For the measurements with the Invar wires there are no similar data as yet available, but since these base-lines are considerably longer and are almost as long as a side of a triangle, we shall not be wrong in considering the increase of the error as doubled, viz. :—

$$\frac{1}{265{,}000.}$$

Since the influence of the two primary base-lines in Cape Colony is small, we may consider that the sides of the triangle are determined from the base-lines on the average with a relative error of

$$\frac{1}{230{,}000.}$$

As the determination of the errors of base measurement is at present very uncertain, it is of little use investigating them with extreme precision ; the error is therefore taken too large rather than too small.

The relative error of the whole triangular chain arising from the combined effect of errors of angle and of length is then :

$$m^2 = \frac{1}{104{,}000^2} + \frac{1}{230{,}000^2}$$

$$m = \frac{1}{90{,}000.}$$

Since the entire extension of the Arc amounts to 23°·2, or about 2600 km., the mean error to be anticipated from the geodetic observations is 0·92″ or 28 metres.

(*b*) ASTRONOMICAL OBSERVATIONS.

The geographical latitudes of the points in question were determined in Cape Colony and Natal by the Horrebow-Talcott method with a zenith telescope by Troughton and Simms.

The values obtained are expressed as provisional, since the star-places employed could not be regarded as final.

They were derived from existing catalogues without adequate determination of proper motions or the systematic differences between different catalogues. The mean error is not stated; it may, however, be ascertained with sufficient accuracy from the information at hand. Single observations are not all quoted, but only the mean for the evening of observation, and the number of the observed pairs of stars. The final mean is then expressed with reference to the various weights of the evening means.

The mean error of a determination of latitude derived from the difference between the mean of the evening and the aggregate mean was 0·11″. The value varies between 0·07″ and 0·15.″

In the Orange River Colony and the Transvaal the determinations of latitude were carried out by the Horrebow-Talcott method with the Repsold theodolite. For ten out of the nineteen stations within the range of the Arc definite star-places could be used, while these do not yet exist for the computation of the remainder.

The accuracy is somewhat less than in Cape Colony, as the observations were frequently completed in a single evening.

All single observations were collected and the probable errors computed. When these are reduced to mean errors, we obtain the average value :

$$m = \pm 0{\cdot}22'' : \text{ maximum } 0{\cdot}45'', \text{ minimum } 0{\cdot}16''.$$

The method of observation was the same in South Rhodesia as in the Transvaal. We have for the average mean error of the seventeen stations 0·27″ : greatest value 0·49″, least value 0·17″. It is not stated if the star-places used are final.

We must not place too high a value upon the deduced mean errors, which only represent the result of computation, and give no unconditional trustworthy measure of the correctness of the observations. The uncertainty is, on the other hand, appreciably greater. Since all the observations were made by one method alone, they are affected by systematic errors. These would have been eliminated if measurements had also been carried out by other methods. In any case, the comparatively small mean error is good proof of the care bestowed by the observer on the observations and of the excellence of the instrument used.

It was originally intended to apply to all astronomically determined latitudes a correction of the magnitude

$$J = 0{\cdot}052'' \, H \sin 2\,\phi,$$

in which H signifies the height in feet above the sea-level, and ϕ the geographical latitude.

This correction is, in fact, applied in vol. i. of the Geodetic Survey, whilst later on, in vol. iii., it is certainly mentioned, although not considered. In vol. v. it is not further taken into account.

For the sake of uniformity, the values taken from vol. i. are for the present work reduced to their original form.

(*c*) DEVIATIONS OF THE PLUMB-LINE.

As a starting-point for the calculation of geographical latitudes (*Geodetic Survey*, vols. i. and v.), the station Buffelsfontein, near Port Elizabeth, was employed for the southern region. From this point the latitudes of the remaining stations were derived by means of the measured directions and distances, Clarke's elements of the earth's dimensions (1880) being employed.

The northern portion at first formed an independent system, having as its origin the geographical co-ordinates of point Salisbury. The geodetic connection of the two systems was carried out later by Captain Gordon, R.E., and is published in vol. v.

Digitized by Google

The following mean differences in the sense south minus north were obtained from the points common to the two triangulations:—

Latitude $-3{\cdot}52''$; longitude $-0{\cdot}62''$; azimuth $-8{\cdot}88''$.

The difference of latitudes is without special significance; it has its origin in local disturbances of the plumb-line at the starting-point. In order to connect the plumb-line deviations of the northern system with those of the southern, it is only necessary to alter the values of the former by the specified difference.

On the other hand, the deviation of the azimuth of $8{\cdot}88''$ appears disproportionately large. If it is to be given its weight in the orientation of the two systems, the northern must be turned round by this amount, and, according to the position of the points, their latitudes enlarged or diminished. But various reasons are opposed to these assumptions. If a local disturbance were to occur at the starting-point of the northern system the five other stations on which the azimuth determinations depend must on the average furnish at least approximately the expected amount of the disturbance, but with reversed signs. But if we take the mean of the deviations of azimuth in Southern Rhodesia we obtain $+0{\cdot}89''$, this being a quantity which constitutes no ground for the assumption of a faulty orientation of the systems. In the same way the values for the southern system come out $+0{\cdot}66''$ in the Transvaal and $-1{\cdot}81''$ in Cape Colony. Although these values differ, the deviations are too small for any conclusions to be drawn from them.

A further control is furnished by Laplace's equation, which represents a relation between the plumb-line deviations and the azimuth:—

$$\alpha - \alpha' + (L - L') \sin B = 0.$$

where α = astronomical; α' = geodetic azimuth.
L = astronomical; L' = geodetic longitude.
B = geographical latitude.

It has been demonstrated by Börsch * that the controls are very well satisfied by Laplace's equation. In particular in Southern Rhodesia, where, except at the starting-point, longitude and azimuth were only simultaneously determined at one station, the equation gives the value of $6{\cdot}90''$ for the final error, which is an excellent proof of the accuracy of the azimuth determinations.

There also appears to be no error in the orientation of the northern system. It must therefore be looked for in the geodetic connection of the two triangulation systems.

For this reason the deviations of the plumb-line in the northern system are only to be increased by the amount of the difference of connection.

In a more recent discussion of the measurements made at the Cape of Good Hope Observatory, this method has not been followed, as appears from a manuscript communication from the Director, but the northern system has undergone a rotation; the same was also done for North Rhodesia.

These latest results are not yet published, but are derived from the manuscript referred to. They are also intended to be employed in the further researches on the original system corrected in the manner specified which are contemplated.

The deviations of the plumb-line are defined as the angles which the normals of the geoid and those of the computed ellipsoid (the so-called ellipsoid of reference) form with one another. In the present case the meridional components only are concerned. They are, except for unavoidable errors of observation, dependent on the selected dimensions of the earth, and upon the distribution of visible and invisible masses. For this reason, that particular ellipsoid should first be computed which best conforms to the deviations of the plumb-line, and then it should be ascertained how the masses in the earth's crust are distributed, and if they are compensated by defects of mass.

These questions must be decided by investigating the circumstances of the curvature in the separate parts of the Arc, and the distribution of the plumb-line deviations from the coast inland.

It has then to be ascertained if a connection exists between the plumb-line perturbations and the geological and tectonic structure of the district. The geoid will only be represented in the rarest cases, since the points do not lie sufficiently near together to enable us to make a safe interpolation of the values from point to point.

In the catalogue, at the end, all the stations are given, with their geographical co-ordinates, longitude and latitude, and height above the sea-level; also, the plumb-line deviations of the Geodetic Survey, and various results of the adjustments, are brought together.

ADJUSTMENTS AND DISCUSSION OF RESULTS.

For the purpose of computing the adjustment, only those points in the southern region are dealt with which are situated in the neighbourhood of the 30th meridian, and 2° from it was taken as the outside limit of such points. Only the most southern station, Berlin, is situated somewhat further off, since by its consideration the Arc is extended by a considerable amount.

In Rhodesia the triangulation only traverses a narrow track, so that here all the points can be utilised. Two stations, viz. Blaauberg and Lejuma, in latitude 23° south, were left out of the computation, because they show a large local disturbance of the plumb-line, which does not conform to the usual progression of this value.

The point Buluwayo also shows a greater local deviation. It is nevertheless included, because the points here lie fairly close together, so that their influence is harmless. For the adjustment, each two neighbouring points, which exhibit almost an identical deviation, are twice included.

The relations existing between the deviations of the plumb-line and the variations in the dimensions of the earth are thus expressed by Helmert.†

For the present case the equation has the simple form—

$$\xi_i = f_i + x + k_i \frac{da}{a} + k'_i \, d\alpha.$$

where f_i = the observed relative deviation of the plumb-line in the geodetic sense, minus astronomical latitude.

$\frac{da}{a}$ = unknown relative correction of the equatorial semidiameter.

$d\alpha$ = unknown correction of spheroidicity.

$k_i = b - \frac{l^2}{2\rho} \sin B \cos B.$

$k_i' = -2b \cos^2 B + k_i \sin^2 B.$

x = unknown constant.
= plumb-line deviation of the zero-point.

ξ_i = outstanding amount of plumb-line deviation.

* *Verhandlungen der 12ten und 15ten allgemeinen Konferenz der Internationalen Erdmessung.*
† *Lotabweichungen*, Heft I., *Veröffentlichung der Kgl. Preuss. Geodätischen Instituts*, Berlin, 1886.

Digitized by Google

In the coefficients—

b = difference of latitude
l = difference of longitude } between the point and the origin.
B = mean latitude

Strictly speaking, x is not to be regarded as a constant; but the coefficient with which this quantity agrees is still dependent on the semi-diameter of the transverse curvature and the difference of longitude from the point of origin. It reads—

$$\frac{R}{R'} \cos l.$$

But since the semidiameter of the transverse curvature differs very little, and cos l approximately = 1, the coefficient at its maximum deviates from unity only in the third decimal place, and may also be stated as 1, since the deviations of the plumb-line are only given to the second decimal place.

The point where the 20th parallel cuts the 30th meridian is taken as the starting-point for the computation of the coefficients, as it represents about the middle of the Arc.

In order to keep the unknown quantities of nearly the same order of magnitude, the unknowns are introduced in the equation as follows:—

$$10{,}000\frac{da}{a} = y$$

and

$$10{,}000\ da = z.$$

The coefficients are therefore abbreviated by four decimals—

$$\frac{k_i}{10{,}000} = b_i$$

$$\frac{k'_i}{10{,}000} = c_i.$$

If these coefficients are computed for each point, the resulting equations of corrections take the following form:—

	$\xi_i = x + b_i y + c_i z + f_i.$			$f''_i.$		$\xi_i = x + b_i y + c_i z + f_i.$			$f''_i.$
1	+ 4·634	− 6·520	+ 6·88	+10·48	30	− 0·190	+ 0·315	+ 4·50	+ 4·32
2	+ 4·270	− 6·104	+ 5·30	+ 8·67	31	− 0·245	+ 0·406	− 0·85	− 1·07
3	+ 4·173	− 5·980	+ 3·11	+ 6·41	32	− 0·263	+ 0·437	− 0·47	− 0·71
4	+ 3·866	− 5·597	+ 1·83	+ 4·92	33	− 0·333	+ 0·554	− 0·92	− 1·23
5	+ 3·543	− 5·205	+ 2·19	+ 5·06	34	− 0·777	+ 1·310	+ 3·52	+ 2·80
6	+ 3·453	− 5·085	+ 1·24	+ 4·05	35	− 0·797	+ 1·345	− 1·16	− 1·90
7	+ 2·850	− 4·292	+ 6·07	+ 8·44	36	− 0·901	+ 1·522	− 1·91	− 2·75
8	+ 2·794	− 4·215	+ 1·27	+ 3·60	37	− 0·963	+ 1·624	+ 0·35	− 0·55
9	+ 2·790	− 4·207	− 0·95	+ 1·37	38	− 1·009	+ 1·711	− 3·86	− 4·81
10	+ 2·767	− 4·180	− 3·78	− 1·47	39	− 1·285	+ 2·196	− 6·18	− 7·39
11	+ 2·730	− 4·125	− 1·03	+ 1·25	40	− 1·476	+ 2·532	− 4·46	− 5·86
12	+ 2·707	− 4·094	+ 5·14	+ 7·40	41	− 1·558	+ 2·688	− 2·79	− 4·27
13	+ 2·684	− 4·065	− 3·40	− 1·16	42	− 1·680	+ 2·896	+ 4·37	+ 2·77
14	+ 2·162	− 3·337	− 9·66	− 7·82	43	− 1·820	+ 3·146	+ 1·29	− 0·45
15	+ 2·067	− 3·204	− 5·26	− 3·49	44	− 1·879	+ 3·255	+ 1·71	− 0·09
16	+ 2·042	− 3·160	− 3·74	− 2·00	45	− 2·005	+ 3·484	+ 9·13	+ 7·21
17	+ 2·023	− 3·133	− 4·80	− 3·07	46	− 2·174	+ 3·794	+ 1·23	− 0·86
18	+ 2·008	− 3·111	− 3·89	− 2·17	47	− 2·245	+ 3·923	+11·07	+ 8·91
19	+ 1·980	− 3·071	− 5·18	− 3·49	48	− 2·431	+ 4·271	+15·07	+12·71
20	+ 1·389	− 2·196	− 3·17	− 1·96	49	− 2·436	+ 4·277	+11·31	+ 8·93
21	+ 1·367	− 2·165	− 5·43	− 4·24	50	− 2·557	+ 4·501	+ 3·31	+ 0·83
22	+ 1·270	− 2·016	− 0·77	+ 0·34	51	− 2·707	+ 4·782	+ 9·23	+ 0·59
23	+ 0·178	− 0·297	+ 3·50	+ 3·66	52	− 2·737	+ 4·837	+ 5·45	+ 2·78
24	+ 0·173	− 0·287	+ 4·75	+ 4·91	53	− 2·882	+ 5·012	+12·45	+ 9·68
25	+ 0·155	− 0·257	− 0·26	− 0·12	54	− 3·077	+ 5·484	+ 8·86	+ 5·83
26	+ 0·115	− 0·190	+ 3·59	+ 3·69	55	− 3·086	+ 5·498	+ 5·37	+ 2·34
27	+ 0·053	− 0·091	− 6·64	− 6·59	56	− 3·511	+ 6·314	+ 9·31	+ 5·83
28	+ 0·035	− 0·059	+ 0·77	+ 0·80	57	− 3·713	+ 6·699	+ 8·82	+ 5·12
29	− 0·017	+ 0·029	− 0·00	− 0·02					

From the equations of correction, according to the rules of adjustment-computation for that ellipse which best agrees with the observed deviations of the plumb-line, the squares of the corrections being thus brought to a minimum, the following normal equations are obtained:—

$$\begin{aligned} 57{\cdot}0\,x + \ 9{\cdot}53\,y - \ 1{\cdot}40\,z + \ 91{\cdot}43 &= 0 \\ + \ 9{\cdot}53\,x + 301{\cdot}15\,y - 479{\cdot}59\,z + 276{\cdot}45 &= 0 \\ + \ 1{\cdot}40\,x + 479{\cdot}59\,y - 777{\cdot}28\,z + 504{\cdot}22 &= 0. \end{aligned}$$

Solving these equations, they yield quite impossible results; a proof that it is out of the question to separate the influence of the two unknown quantities y and z, and, at the same time, to determine the magnitude and form of the semi-ellipse.

But we have from other observations a value for the spheroidicity which is more exact than that which can be calculated from the measurement of the Arc; thus Helmert,* from measures of gravity, has deduced the value

$$\frac{1}{298{\cdot}3}$$

with a mean error of the denominator of $\pm$ 1·1,

$$\frac{1}{298{\cdot}3} = 0{\cdot}00335233$$

and Clarke's value of the spheroidicity which is used in the geodetic computations is—

$$\frac{1}{293{\cdot}466} = 0{\cdot}00340755.$$

* F. R. Helmert, "Der normale Teil der Schwerkraft im Meeresniveau," *Sitzungsberichte der Kgl. Preuss. Akademie der Wissenschaften*, 1901.

Digitized by Google

It follows that to convert from Clarke's to Helmert's ellipsoid

$$da = -0{\cdot}00005522$$
$$\text{or } (z) = \quad 10{,}000\,da = -0{\cdot}5522.$$

If this value is introduced into the equations of correction, the new absolute members f' are obtained, which are already given in the comparison, and the equations of correction then have the form—

$$\xi_i = x + b_i y + f'_i$$

in which the coefficients b are of course the same as before.

The normal equations for this case work out

$$57{\cdot}0\ x + 9{\cdot}53\ y + 92{\cdot}16 = 0$$
$$9{\cdot}53\ x + 301{\cdot}15\ y - 11{\cdot}71 = 0.$$

As results we obtain

$$x = -1{\cdot}632'' \pm 0{\cdot}647''$$
$$y = +0{\cdot}0905'' \pm 0{\cdot}281''.$$

The mean error of a single equation is $\pm 4{\cdot}87''$. The sum of the squares of the outstanding errors is decreased from 1457 to 1305. The single values for the same are collected in the table at the conclusion of the paper.

From $y = 10{,}000\,\frac{da}{a}$ follows as the correction to Clarke's equatorial semidiameter $a = 6378\ 249$ m.

$$da = +58 \pm 179 \text{ m.}$$

The decrease of the squares of the errors is only slight, because the unknown quantity y, which has been determined, is very small.

Therefore, no large errors are caused by placing $y = 0$ m., in the original equations of correction by way of trial, to obtain a value for the spheroidicity of the most favourable ellipse, that is, in regarding Clarke's equatorial semidiameter as invariable.

From the normal equations:

$$57{\cdot}0\ x - 1{\cdot}40\ z + 91{\cdot}43 = 0$$
$$-1{\cdot}40\ x + 770{\cdot}28\ z + 504{\cdot}22 = 0$$

it follows that:

$$x = -1{\cdot}62'' \pm 0{\cdot}64''$$
$$z = -0{\cdot}6576 \pm 0{\cdot}175.$$

The mean error of an equation is $\pm 4{\cdot}86''$. The sum of the squares of outstanding errors is 1299.

As $z = 10{,}000\ da$, therefore $da = 0{\cdot}00006576$, and the spheroidicity a of the ellipse $= 0{\cdot}0033418 = \frac{1}{299{\cdot}2}$, the mean error of denominator being $\pm 1{\cdot}6$.

This value is accidentally similar to Bessel's spheroidicity; as, however, only a subordinate significance is to be attributed to this, the outstanding errors are not individually specified in this case; moreover, they do not differ considerably from the former.

It may be incidentally remarked that if Bessel's value for the spheroidicity be introduced in the equations of correction, instead of Helmert's, we should obtain approximately $da = 0$, with almost the same mean error as before. With $da = 58$ m. we obtain for the equatorial semidiameter for the adopted ellipse $a = 6378\ 307$ m. $\pm$ 179 m.

But the mean error is only a result of computation in the adjustment. We must bear in mind that for the adjustment, the geodetic and astronomical observations have been regarded as free from error. But the geodetic observations, as previously ascertained, have a mean error of $\frac{1}{9\,0.0\,0\,0}$, or $0{\cdot}92'' = 28$ m. The influence which this uncertainty exercises upon the equatorial semidiameter is easy to find differentially, while we regard the earth as a sphere. It follows indeed directly from the given equation that exists between the deviations of the plumb-line and changes in the dimensions of the earth. While we regard all outstanding influences of error as nil, we obtain

$$\xi = k\,\frac{da}{a},$$

but as k is approximately equal to the difference of latitude, b, we have:—

$$da = \frac{\xi \,.\, a}{b} = \frac{0{\cdot}92'' \,.\, 6378200}{23{\cdot}2^\circ \,.\, 60{\cdot}60} = 70 \text{ m.}$$

The uncertainty of the results, conditioned by the geodetic measurements, is thus 70 metres.

The influence of errors arising from the astronomical observations is inconsiderable, as on the average an astronomical latitude is determined with a mean error of $\pm 0{\cdot}25''$. This value, then, does not come into consideration, as compared with the mean error of a point ($4{\cdot}87''$), as determined in the adjustment.

Much larger, but not to be expressed numerically, are the systematic errors which have their origin in the regional irregularities of mass. These will be more closely investigated later in the determination of the conditions of curvature in individual portions of the arc.

For comparison, the values obtained in recent years for the dimensions of the earth are set forth here. The values obtained in Europe are published by Helmert.*

They are the two measurements of degrees of latitude already cited, and the measurement of a degree of longitude in latitude 52°. This last includes 69 degrees of longitude, corresponding to about 42 degrees of latitude. For Bessel's value for spheroidicity we obtain—

From the East European Arc
$a = 6378455$ m. $\pm$ 127 m.

From the West European Arc
$a = 6377935$ m. $\pm$ 155 m.

From measurement of a degree of longitude
$a = 6378057$ m. $\pm$ 105 m.

Besides these results, there exist other measurements in the United States of America.† For the most favourable ellipsoid, $a = 6378283 \pm 50$ m. with a spheroidicity of $\frac{1}{2\,9\,7{\cdot}8}$ was obtained there.

This result was attained by methods essentially different from the others. Here, no arcs were dealt with, but for a surface of 19° in latitude and 56° in longitude that ellipsoid was computed which accords best with the geoid in this region.

* F. R. Helmert, "Die Grösse der Erde," *Sitzungsberichte der Kgl. Preuss. Akad. der Wissenschaften*, 1906.
† *Verhandl. d. 15. allgemeinen Konferenz d. Internat. Erdmessung.*

Digitized by Google

Further, the adjustment was made on the supposition that down to a depth of 114 km. below the earth's surface a uniform isostatic compensation of the visible masses exists. For this purpose it was necessary to apply corrections to the observed deviations of the plumb-line in latitude and longitude. If we undertake the adjustment in the usual manner by direct observations of the deviations of the plumb-line, the result is a spheroidicity of $\frac{1}{298 \cdot 5}$ and $a = 6{,}377{,}945$ m.

The mean error of this value would be rather larger than the above. To apply these values to the spheroidicity $\frac{1}{299 \cdot 2}$, they must be reduced by some 10 m.

The South African Arc of Meridian gives for this spheroidicity

$$a = 6{,}378{,}249 \pm 179 \text{ m.}$$

We perceive from this comparison that the results agree within narrow limits; the South African result corresponds almost exactly with the mean result of the others. The two European Meridian Arcs show the greatest difference.

The value previously given by Helmert as the most reliable for the great semi-axis of approximately 6378·2 km. receives thus a new confirmation.

For geographers, the transfer from Bessel's to Clarke's equatorial semidiameter has only a slight significance, in so far as every determination of area based on the earlier dimensions would be increased by 0·03 per cent. and the total area of the earth's surface by 150,000 square kilometres.

Now that the result of the complete Arc has been evaluated, the conditions of the curvature in the separate parts of the Arc have to be investigated. In the equations of correction for the spheroidicity the value $\frac{1}{298 \cdot 3}$ is introduced.

First the southern portion of the Arc is dealt with, which covers the eastern part of Cape Colony, Natal, Orange Colony, and the Transvaal. It extends from 32° 53′ to 23° 32′ south latitude, with a length of 9° 21′. The total number of stations is 22.

The normal equations are—

$$22{\cdot}0\,x + 59{\cdot}57\,y + 31{\cdot}12 = 0$$
$$59{\cdot}57\,x + 180{\cdot}45\,y + 163{\cdot}68 = 0,$$

from which we have—

$$x = +9{\cdot}81'' \pm 2{\cdot}02''$$
$$y = -4{\cdot}147'' \pm 0{\cdot}705''.$$

The mean error of an equation is $\pm 3{\cdot}09''$

$$da = -2645 \text{ m.} \pm 450 \text{ m.}$$

The large mean error of the constant is caused by the fact that the starting-point for the calculation of the coefficients does not come within this portion of the Arc.

The northern portion extends through 10° 50′, viz., from 20° 30′ to 9° 40′ south latitude, over south and north-east Rhodesia, and includes 36 stations.

From the normal equations:—

$$36{\cdot}0\,x - 50{\cdot}04\,y + 66{\cdot}73 = 0$$
$$-50{\cdot}04\,x + 120{\cdot}70\,y - 175{\cdot}39 = 0,$$

there follow

$$x = +0{\cdot}39'' \pm 1{\cdot}10''$$
$$y = +1{\cdot}616'' \pm 0{\cdot}602''.$$

The mean error is $\pm 4{\cdot}31''$

$$da = +1031 \text{ m.} \pm 438 \text{ m.}$$

As these two Arcs do not touch one another, but are separated by an interval of 3° in which no stations occur, a third intermediate section of the Arc was adjusted which connects the other two and partially overlaps them. It extends over the Transvaal and South Rhodesia from 25° 46′ to 16° 26′ south latitude, thus including 9° 20′, and has 25 stations.

The normal equations are:—

$$25{\cdot}0\,x + 8{\cdot}08\,y - 27{\cdot}04 = 0$$
$$8{\cdot}08\,x + 31{\cdot}91\,y - 18{\cdot}54 = 0.$$

The solutions are—

$$x = +0{\cdot}97'' \pm 0{\cdot}68''$$
$$y = +0{\cdot}335'' \pm 0{\cdot}604''.$$

The mean error is $\pm 3{\cdot}27''$

$$da = +213 \text{ m.} \pm 385 \text{ m.}$$

The outstanding errors referred to these three ellipsoids are given in the table on page cxc.

ARRANGEMENT OF MASS AND TECTONIC STRUCTURE.

The three sections of the Arc thus possess an essentially different curvature, and it must therefore be regarded as an accident that the complete result yields so plausible a value. For the southern part we get by far the smallest ellipse, but it agrees better with the observations than that of the entire Arc, as is shown by the agreement of the outstanding errors. In the south the ellipsoid sinks and thus reduces the large positive deviations.

The middle Arc has a comparatively smaller curvature, and the ellipsoid is so inclined towards the principal ellipsoid, that the errors are increased in a positive sense.

The northern Arc has a still smaller curvature with respect to the ellipsoid of the entire Arc, so that finally the result of the entire Arc again leads approximately to Clarke's semidiameter.

These essentially different curvatures in the separate portions are, in general, dependent on the orographical conditions.

We are here situated in the region where the elevated plateau of South Africa falls towards the Indian Ocean. From the coast which at the southern termination of the Arc slopes down steeply, we proceed, as we follow the 30th meridian, through the rising hill country of Natal over the ridge of the Drakensberg and on to the uplands of the Transvaal.

The same general sequence as is shown by the physical surface of the land is represented in miniature in the geoid and in the ellipsoid which coincides with it. This fact is exhibited in the change of the deviations of the plumb-line from the coast inland. In the south we find large positive values which gradually become smaller towards the north; that is, the geoid rises in relation to the reference ellipsoid.

As soon as the ridge is reached, the sign changes—a proof that the geoid again descends with reference to the ellipsoid; and this procedure is, in fact, observable throughout the Transvaal. North of the Limpopo the geoid begins to rise for a short distance, then falls as far as the Zambesi, and from there to the end rises again. The ridge of the Drakensberg and the valleys of the great rivers thus form the turning-points of the geoid.

Digitized by Google

These conditions of the curvature of the separate portions of the Arc also prove this undulating form of the geoid. In the south, owing to the influence of the Drakensberg and the abrupt descent of the coast, a considerable reduction takes place in the ellipse, which rises towards the interior, and the geoid rises correspondingly. The absolute amount of the height of the geoid above the ellipsoid cannot be stated, because we do not know the absolute deviations of the plumb-line in reference to the earth ellipsoid, but only the relative values in respect to the ellipsoid of reference.

The middle ellipsoid is depressed towards the south, corresponding to the case of the geoid, and in relation to the curvature forms a transition to the northern Arc, which, owing to the depression of the geoid in the Zambesi Valley, possesses a markedly reduced curvature. From the circumstance that, in general, the geoid adapts itself to the terrestrial surface, it follows that the elevations, particularly the Drakensberg, are not compensated by deficiencies below the surface, or only partially so.

According to the isostatic theory of the equalisation of weight, the opposite is mostly the case; it has usually been found that the visible masses are compensated by defects occurring below them.

This abnormal condition has its origin in the geotectonic structure. South Africa is one of the oldest continents, and was, until the Triassic period, united with the Indian peninsula. Through a collapse, the Indian Ocean was then formed, the result (according to Suess)* of a fracturing of the crust.

This theory has found many supporters, and Passarge,† in particular, maintains this point of view. Then, in more recent times, Penck,‡ from his own observations, and from the more recent geological researches by Rogers, Molengraaf, Anderson, and Du Toit, comes to the conclusion that the South African Tableland may present a surface of erosion, which falls towards the Indian Ocean, not along a fault line, but by the erosion of its margin.

Penck§ leaves it an open question whether the modification has followed on the elevation of the continent or the sinking of the ocean. The reason why eminent investigators have arrived at essentially different conclusions as to the formation of these mountain ranges, is that, in this case, the original forms have been completely destroyed by denudation, and it is difficult to form an opinion as to their structure from geological researches alone. It is, therefore, of interest to decide which theory is best supported by the distribution of the masses, as shown by the deviations of the plumb-line.

We may here make a slight digression in order to estimate the value of researches bearing on the present case which have been conducted in other regions.

For the younger faulted mountains, so far as they have been investigated, it has everywhere been shown that they are entirely, or for the most part, compensated by subterranean deficiencies of mass, as, for example, the Alps and the Himalayas.‖

It is otherwise in case of horsts. A typical example is offered by the Harz Mountains, which have been exhaustively investigated by the Geodetic Institute with reference to the deviations of the plumb-line¶ and the measurement of gravity.** Here a great excess of mass has been found, and, according to Deecke,†† the cause is to be sought in the fact that the Harz is a hard compressed horst with bounding faults, especially where the sunken block has been forced under that which remains standing, thus causing a great excess of mass. The circumstances are similar in the rift valley of the Rhine and the mountains which enclose it.

Thus we find almost everywhere low values of gravity along tectonic rift valleys, and high values‡‡ over horsts.

In the Thuringian Forest, on the contrary, where there is no marginal faulting, no excess of mass is present.

It may thus be conjectured that the same circumstances existing on a small scale in the Harz are repeated on a large scale in South Africa.

We thus return to the old conception of Suess, that a fracturing of the worn-down surface has here occurred. Simultaneously the sunken block was forced under the masses which maintained their position, and has thus been the cause of the accumulation of mass. This block must lie at a considerable depth, since throughout the whole of the Transvaal the deviations of the plumb-line are negative, which cannot be regarded as accidental, and are greater at further distances than nearer.

If geological and not tectonic causes have brought about this phenomenon, the inclinations of the plumb-line must, at least partially, tend towards the north, because there the oldest rocks and those of the highest specific gravity, for instance granite, occur; whereas further to the south the more recent strata appear. The powerful compression may then, perhaps, have pressed the magma upwards, as we find in the case of the basaltic and amygdaloidal rocks of the Quathlamba Mountains and in the intrusions, which are widely distributed as far as the interior of the Transvaal.

As, however, nothing is certainly known of the age of the eruptions in this respect, there is nothing to contradict the assumption. It is not necessary to assume that volcanic outbursts followed upon the main line of faulting; these would much more likely be closed by the pressure of the blocks against each other, while the adjacent portions underwent a collapse in the readjustment of strain.

We thus arrive at this theory of the connection between dislocations and eruptions, since otherwise the excess of mass which is present is not explicable. But in volcanic regions the opposite is the case.

Helmert§§ gives an example in the Caucasus, where an excess of compensation occurs. This behaviour may thus be explained; owing to an explosive eruption, huge masses were ejected from the depths, and that the space they formerly occupied could afterwards be only partially filled.

But it is not necessary to conceive hollow spaces; because the pressure of the molten magma charged with gases would be less, the density will also be correspondingly smaller.

In the case of the Drakensberg, on the other hand, we may rightly interpret the appearances by assuming that eruptions are a consequence of dislocation; fracture and volcanic outbursts have together occasioned the excess of mass.

If we should assume with Penck that the Drakensberg was caused by bending, tractive forces only would have been exerted, whether a sinking of the ocean level or an elevation of the land took place. The density of the strata concerned would therefore be reduced, and the consequence must be a defect of mass, which would be all the more perceptible if the eruptions occurred independently of the dislocations. Furthermore, Penck assumes an upheaval of the land and a lowering of the bed of the ocean to be still proceeding at the present day, in order to explain the evidences of elevation and depression observed on the coast of Natal; this, according to the position of the flexure in relation to the sea-level, would give rise to the movements on the coast in one or another direction. The grounds which Penck puts forward for this theory are hydrographic in their nature. He infers the elevation of the land from the youthful type of the valley-forms and from the fact that the rivers have not yet graded their beds; the lowering of the bed of the ocean he deduces from the fact that a shelf of deposition at the

* E. Suess, *Das Antlitz der Erde*, 1883–1885.

† S. Passarge, *Südafrika. Eine Landes- Volks- und Wirtschaftskunde*, 1908.

‡ A. Penck, "Der Drakensberg und der Quathlambabruch," *Sitzungsberichte der Kgl. Preuss. Akad. d. Wissenschaften*, 1908.

§ A. Penck, "Sudafrika und die Sambesifälle," *Geogr. Zeitschrift*, 1906.

‖ F. R. Helmert, "Die Schwerkraft im Hochgebirge," *Veröff. der Kgl. Preuss. Geod. Inst.*, 1890.

¶ A. Galle, *Lotabweichungen im Harz und seiner weiteren Umgebung*, 1908.

** L. Haasemann, *Bestimmung der Schwerkraft auf 66 Stationen im Harz und seiner weiteren Umgebung*. 1905.

†† W. Deecke, "Erdmagnetismus und Schwere in ihrem Zusammenhang mit dem geologischen Bau," &c., *Neues Jahrbuch für Min., Geol. und Paläont.*, xxii. Beilageband, 1906.

‡‡ G. v. d. Borne, "Die physik. Grundlagen der tektonischen Theorien," *Gerlands Beiträge zur Geophysik*, 1908.

§§ F. R. Helmert, *Mathem. und physik. Theorien der höheren Geodäsie*, Bd. ii., 1884.

Digitized by Google

mouths of the rivers is absent. The distribution of masses should first be considered, as the cause of the displacement of the beach, but the data at present do not admit of any trustworthy conclusion on this question. It is not known with certainty how far a general compensation of the South African continent has taken place, and upon this the cause of movement in one or other sense depends. From the distribution of the plumb-line deviations, and the large differences in the conditions of curvature of the separate parts of the Arc, it certainly appears to follow that no complete compensation has been attained. How far it has occurred cannot be decided. On the other hand, it may be conjectured, from the great age of the continent, that in the course of long ages all differences of tension have been equalised, and complete isostasy prevails. Then the further supposition is warranted, that the land masses were progressively carried away by erosion and deposited upon the floor of the ocean, thereby occasioning the upheaval of the land.

However, we still need further researches to elucidate these questions.

For this Pendulum observations would be specially suitable, for conclusions as to the arrangement of masses in the earth's crust are attained far more perfectly by measurements of the force of gravity than by observing the direction of gravity as indicated by the deflections of the plumb-line.

In order to be better able to follow the distribution of the disturbances, the deflections of the plumb-line are graphically represented upon the accompanying diagram.* The scale † of the map is the same as that of Bartholomew's map of South Africa, viz., $\frac{1}{2.500.000}$. This is the only serviceable topographical map of South Africa. It was originally intended, by using a map showing heights on a large scale, to compute the amount of the deviations of the plumb-line from the orographic forms and to compare them with those observed. But, unfortunately, no adequate maps for this purpose were obtainable. In the diagram the arrow indicates the deflected plumb-line and its length the amount of deflection.

We also observe here that, as a rule, south of the Drakensberg the plumb-line is deflected towards the north, and north of the Drakensberg towards the south. In the southern portion lines of equal deflection are drawn; in other regions the points lie too far apart for us to derive any conclusions upon the progression of the deflection.

Although in the south in some places the position of the lines are not quite accurately located, their general character is well determined from the existing points. We may easily recognise that the lines show a dependence upon the direction of the mountains; the maximum lies at the foot of the mountain range.

In Natal, where the Drakensberg takes a north-south direction, these appearances cannot be followed, because there the meridional component of attraction disappears. The behaviour of the deflections near Port Elizabeth is striking. Whilst elsewhere on the east coast the deviations of the plumb-line are positive, the opposite condition prevails here; the plumb-line is deflected towards the south. This phenomenon may have its origin in the local character of the coast. Off Natal the coast descends much more abruptly than in the south, owing to which the continent appears to be prolonged towards the south. But this does not appear to be the only cause, for, if it were so, the influence would have a similar effect upon the neighbouring stations. This is not the case. We must assume, on the contrary, that between Port Elizabeth and the Zuurberg there exists a defect of mass, which produces a repelling effect. In this way the large positive deviation on the Zuurberg is explained. Upon the southern edge of the Zuurberg a fault occurs, and, on the fracture line, lava and tuffs have been emitted.‡ It is possible that the deficiency of mass is connected with this fissure. At the outbreak a breaking up took place, so that the zone of crushing was only partially filled up, and offered a free outlet to the eruption. But there may be also other causes purely geological for the defect of mass, and the cretaceous Uitenhage beds between Port Elizabeth and the Zuurberg may be the cause of the differences in mass. But, since the Grassberg Station shows the same deviation as the Zuurberg, so also here the defect of mass will exercise its effect, for the Snow mountains, the mass of which has the same influence, lie further off. But as the cretaceous beds do not extend to this point, tectonic causes must exist. At Cape St Francis, on the other hand, there appears no further influence of the defect, which seems to follow the line of the mountain ranges.

In the neighbourhood of the sources of the Vaal we have more observations, and as here fairly large differences of altitude exist, the deflections of the plumb-line show great divergencies. We can, nevertheless, conclude from this that the centre of attraction of the mass is situated somewhere within the ridge of the Drakensberg, since the station Inkwelo, which is situated on one of the highest positions where the trend of the mountain takes a west-easterly direction, shows a positive deflection; and the stations Kaalkop and Hermitage, which lie to the west of the Drakensberg upon a spur of the same, are without deflection. Here, then, the maximum accumulation of mass appears to lie. Unfortunately, in the region of the Mont-aux-Sources, where interesting conclusions might be expected, we have no observations.

The greatest deflections of the entire Arc are to be found in the two most northerly stations in the Transvaal, Blaauberg and Lejuma, situated on the Blaauberg and Zoutspanberg. Here the orographical forms themselves cannot be the only reason; other causes, besides, must co-operate. Perhaps the name Zoutspanberg offers an explanation. Here, and especially in Northern Transvaal, the larger salt-pans occur in the chalk and sandstone, and it is not impossible that here, perhaps, also a salt-bed may be the cause of the perturbations.

No suitable maps of Rhodesia giving altitudes exist; the geological conditions are also very little known. Therefore, it is not possible to discover the relations existing between the distribution of masses and the tectonic structure. It is only at separate points that a certain dependence of the deviations of the plumb-line on the orographic structure appears to exist; and the best existing map, that in Stieler's Hand-Atlas supports this conclusion. The station Buluwayo, which, in relation to the neighbouring stations, shows a large negative deviation, is situated on the north side of a smaller mountain range, which probably causes the local disturbance. The distribution of the plumb-line deviations in Northern Rhodesia is striking, for here the lines of equal deviation show a direction running from south-west to north-east.

Even if the lines at individual places had been given a somewhat different form, they would still retain the same direction, because the stations lie pretty closely together. The reason for this condition is not stated.

REPRESENTATION OF THE GEOID.

We are able, by means of the deviations of the plumb-line, graphically to represent the geoid along a meridional section.§ We assume that we are acquainted with the distribution of the plumb-line deviations between the individual stations, but for this purpose only those localities where it is possible to construct lines of equal deviation will come under consideration, *i.e.* essentially only those on the south coast and in Rhodesia.

The deviation ξ may be taken as the depression angle of the tangent of the geoid, as compared with the tangent of the ellipsoid of reference (which is the basis of computation) in the meridian section.

If we take the values of ξ as ordinates and the distances as abscissæ of a rectangular system of co-ordinates, and draw a curve through the points obtained, then the difference in altitude of the geoid from the ellipsoid

$$\Delta h = -\int_0^s \frac{\xi''}{\rho} ds$$

where $\rho = 206,265$, *i.e.* the number for the reduction from degrees to circular measure. The integration is carried out graphically by a procedure

* Plate XXIX.

† Here half this scale has been employed.

‡ S. Passarge, *Südafrika.*

§ F. R. Helmert, *Mathem. u. physik. Theorien der höheren Geodäsie*, Bd. i., 1884

Digitized by Google

introduced by Prof. Runge. We replace the curve to be integrated $y = f(x)$ of the deviations of the plumb-line by a variable curve of step-like form, so that the surfaces enclosed by the first and second on both sides are equal.

If $F'(x) = \int_0^x f(x)\,dx$ and F (x) is the integral of the step-curve, then

F$'(x) =$ F (x) at those places where $y = f(x)$ and the horizontal parts of the broken curve cut one another.

F (x) consists of virtually rectilinear pieces; for, if x from 0 to x_1 increases, y_1 is constant, and similarly the derivative from F (x).

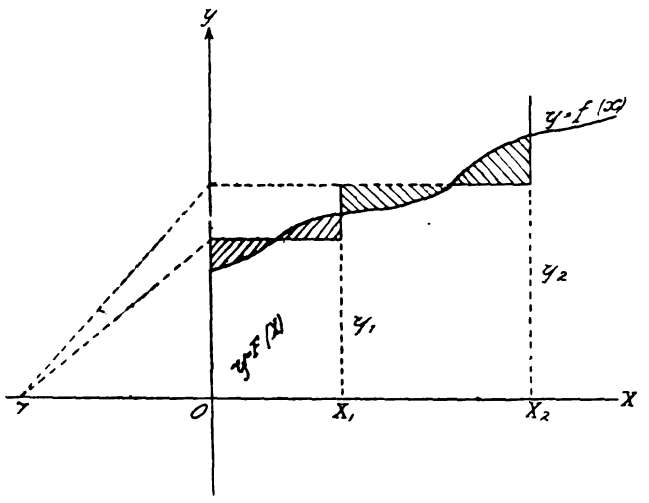

F (x) is therefore a straight line, and the tangent of its direction is tan $\alpha = y_1$.

This straight line may be constructed, as α is the angle of a right-angled triangle, the catheters of which are y_1 and 1; since $y = \frac{\xi}{\rho}$, in this case the catheters become ξ and ρ.

By continuing this process, if we place the succeeding straight line always at the last point of the preceding, and continue it up to the ordinate of the nearest point of variability, we obtain the integral curve F (x). Now, if we describe a free-hand curve through the corner points of the lineation this represents the required geoid.

In this way three profiles have been drawn, the first on the meridian of Port Elizabeth 25° 40′ E. of Greenwich, the second on the meridian 27° E., both starting from the coast; the third profile relates to the meridian 30½° E. in Rhodesia. (See Sections I., II., and III.)

The elevations of the geoid appear in all, by suitable choice of the units, to be increased 10,000 times.

The elevations of the physical surface of the earth are represented on a 100-fold scale, but correspond, especially in the third figure, only to a rough approximation to the actual circumstances, since they should only be used for comparison.

From the first profile we recognise how the geoid, in consequence of the above-mentioned defects of mass between Port Elizabeth and the Zuurbergen, falls below the ellipsoid and then rises uniformly. We notice the same ascent in the second figure. The geoid follows the land surface. It may, perhaps, at first sight, appear that the rising of the geoid over the ellipsoid is insignificant, amounting in the maximum to about 11 m. Now, the ellipsoid is so determined by the adjustment that it is adapted as closely as possible to the geoid, while the deviations of the plumb-line are made small and their algebraic sum almost *nil*. The geoid, accordingly, is found almost as often above as below the ellipsoid obtained. This relation, however, scarcely corresponds to the natural conditions, for, although a general compensation has indeed taken place, it is assumed that the geoid always lies above the earth-ellipsoid. The actual elevations cannot be computed from the deviations of the plumb-line, as we only have to deal with relative values. Helmert * computed, under certain assumptions, the deformations of the figure of the earth, and found the elevation of the geoid in Central Africa, towards the coast, to be about 400 m. From more recent investigations of the isostatic compensation we may conclude that this amount is not approximately reached.

If we take, in order to have a value, 100 m., and assume that the ascent is proportionate to the distance, the geoid beneath the Stormberg would be already raised to 20 m. instead of 11 m.

In the third figure the position of the geoid is arbitrarily assumed, in order that its lowest point may rest on the ellipsoid; this does not coincide, as we should expect, exactly with the lowest position of the earth's surface in the valley of the Zambesi. Both minima would at once take up a common position if we were to lower the ellipsoid of reference so as to bring it to the probable position of the ellipsoid of rotation. A rotation would thereby take place, and the minimum would be displaced towards the south. Besides, the negative deviations in the Transvaal would then become smaller, but the conclusions drawn from these values remain confirmed, because relative magnitudes only are concerned.

TERRESTRIAL MAGNETIC PERTURBATIONS.

Beattie † has recently published a report upon a terrestrial magnetic survey in South Africa. Since, in other parts on the earth's surface (especially by Eschenhagen ‡ in the Harz mountains), relations have been demonstrated between disturbances in the arrangement of mass and terrestrial magnetic perturbations, it may be of interest to determine if a like connection also exists here.

In the work referred to by a method first employed by Rücker and Thorpe,§ centres of perturbation have been determined and represented on maps. For this purpose the terrestrial magnetic force in each place was analysed into its three components, directed towards the north, the west, and the zenith. The differences between observed and normal values gave the disturbing forces. The direction of the resultant of the two horizontal components and the vertical intensity indicated the seat of the disturbing force. A region which attracted the south pole of the magnet was designated a line or ridge of attraction; and one which repelled it, a valley line. The point of intersection of two ridges forms a point; that of two valleys a depression; and that of a ridge and a valley a saddle. A few ridges and valleys are indicated on the accompanying sketch.

* F. R. Helmert, *Mathem. u. physik. Theorien der höheren Geodäsie*, Bd. ii., 1884.

† J. C. Beattie, "Report of a Magnetic Survey of South Africa," published in the *Roy. Soc. Lond.*, 1909.

‡ M. Eschenhagen, "Magnetische Untersuchungen im Harz," *Forschungen zur deutschen Landes- u. Volkskunde*, xi. Band, 1899.

§ A. W. Rücker and T. E. Thorpe, "A Magnetic Survey of the British Isles," *Phil. Trans. Roy. Soc.*, 1890.

Digitized by Google

We easily recognise that in the southern part a certain dependence exists between magnetic disturbances and deviations of plumb-line.

The magnetic valley lines between Port Elizabeth and the Zuurberg agree with the defect of mass shown to exist in these regions. The magnetic attraction lines lying further north follow in their course fairly exactly the maximum values of plumb-line deviation. Even the smaller convexities in the direction from Grassberg towards Zuurberg and in the vicinity of Berlin correspond with the secondary ridges, which appear to be somewhat displaced. The principal ridge ends in the east, where the plumb-line deviations assume smaller values. The intersection of the 30° meridian with the Drakensberg may be cited as a second example. Here the greatest excesses of mass were shown to exist beneath one of the westerly spurs of the mountain range somewhere near the points Kaalkop and Hermitage. At the same spot a magnetic ridge occurs. But whilst in the south the magnetic crest lines coincided with those points which show maximum plumb-line deviations, here magnetic attraction and attraction of mass fall together.

Conjectures only can be advanced as to the cause of this behaviour. As is well known, the two theories for the explanation of anomalies of terrestrial magnetism are opposed to each other. According to one supposition, magnetic disturbances are caused by the magnetic properties of the rock masses. According to the other, maintained by E. Naumann,* anomalies arise through deviations of the earth currents, which produce terrestrial magnetism.

This deviation should be studied on tectonic lines.

It would be beyond the scope of the present work to attempt to fathom the connection existing between attraction of mass and magnetic forces. It must suffice to indicate the self-evident connection which exists.

CONCLUSION.

The most important results are here grouped together.

The reduction of the plumb-line deviations for the South African Arc of Meridian, adopting Helmert's value for spheroidicity, resulted in an insignificant enlargement of Clarke's equatorial semidiameter.

The mean error of the results comes out somewhat larger than from similar investigations of other Meridian Arcs.

A great difference is observable in the curvature in the separate parts of the Arc.

Its origin was sought for in the tectonic structure, and a certain dependence was found between the mass-arrangement as determined from plumb-line deviations and the tectonic conditions occurring in this region.

A theory for the origin of the Drakensberg was formed, founded on our knowledge of mass arrangement, as determined from plumb-line deviations—a theory which all evidence seems to justify. It may, perhaps, from lack of sufficient material, possess only a theoretical value; it may, however, show how it is possible, by the aid of the results of exact observations, to throw light on tectonic questions.

A certain connection is established between deflections of the plumb-line and terrestrial magnetic disturbances. It has long been known that terrestrial magnetism has given us knowledge of the condition of the earth's crust in the lower depths, which could never be accessible to direct observations. Further investigations are, however, necessary to enable us to draw trustworthy conclusions from the results obtained.

With reference to the geographical distribution of irregularities of masses which manifest themselves in the course of the work, various questions which are left open await solution, but above all adequate data are needed to enable us to understand the general connection between mass distribution, the structure of mountain ranges, and the secular elevations and depressions which are connected with them.

We have also to decide whether mass arrangement is constant or whether it suffers changes from the operation of outside forces. In the latter case especially, we should not be justified, on the basis of present conditions, in drawing conclusions upon widely remote occurrences in the earth's history. When all these problems have received a satisfactory solution, it will be possible for us to approach more closely to the goal towards which all these investigations tend, namely, to discover the laws which have been predominant in forming the figure of our planet.

* *Verhandlungen d.* 12 *Geographentages zu Jena*, 1897.

A Table of Plumb-Line Deviations.

f = Plumb-line deviations in the Geodetic Survey System.
ξ = " " from the Ellipsoid of the Whole Arc.
I., II., III. = " " " Ellipsoids of portions of the Arc.

No.	Station.	Geographical Latitude South.	Geographical Longitude East of Greenwich.	Altitude in Metres.	f.	ξ.	I.	II.	III.
		° ′	° ′		″	″			
...	Cape St. Francis . .	34 11	24 46	120	+ 0·86	+ 2·9	...	...	...
...	Port Elizabeth . .	33 58	25 37	60	− 7·36	− 5·3	...	...	...
...	Coegakop . . .	33 46	25 37	140	− 7·87	− 5·7	...	...	...
...	Drivers Hill . . .	33 17	26 42	850	+ 2·00	+ 4·3	...	...	...
...	Zuurberg . . .	33 15	25 34	990	+10·89	+13·2	...	...	...
1	Berlin	32 53	27 37	520	+ 6·88	+ 9·27	+ 1·07	...	...
...	Grassberg . . .	32 51	24 30	1030	+10·71	+13·1	...	...	...
2	Cwecweni . . .	31 52	28 2	1280	+ 5·30	+ 7·43	+ 0·77	...	...
...	Lubisi	31 47	27 30	1780	+10·80	+12·9	...	...	...
...	Tafelberg . . .	31 39	25 10	1660	+ 0·57	+ 2·7	...	...	...
3	Umtata . . .	31 36	28 45	870	+ 3·11	+ 5·16	− 1·09	...	...
...	Xuka	31 18	28 0	1890	+12·00	+14·0	...	...	...
...	Bendearg . . .	31 7	27 59	2770	+10·88	+12·9	...	...	...
...	Hanover . . .	31 4	24 26	1430	+ 0·21	+ 2·2	...	...	...
4	Umtamvuna . . .	30 44	29 57	790	+ 1·83	+ 3·64	− 1·30	...	...
...	Helvelyn . . .	30 42	27 17	2480	− 1·68	+ 0·2	...	...	...
...	Aasvogelberg . .	30 18	27 3	2210	− 5·38	− 3·7	...	...	...

Digitized by Google

A Table of Plumb-Line Deviations—continued.

f = Plumb-line deviations in the Geodetic Survey System.
ξ = " " from the Ellipsoid of the Whole Arc.
I., II., III. = " " " Ellipsoids of portions of the Arc.

No.	Station.	Geographical Latitude South.	Geographical Longitude East of Greenwich.	Altitude in Metres.	f.	ξ.	I.	II.	III.
		° ′	° ′		″	″			
...	De Put	30 15	23 56	1320	− 0·38	+ 1·3	...	..	...
...	Wepener Base S.	29 55	27 3	1600	− 2·97	− 1·4	...	...	...
5	Durban	29 51	31 0	...	+ 2·19	+ 3·75	+ 0·18	...	...
...	Wepener Base N.	29 44	26 59	1470	− 2·30	− 2·5	...	...	...
...	Orange River	29 40	24 16	1190	− 0·48	+ 1·1	...	...	...
6	Zwart Kop	29 36	30 15	1450	+ 1·24	+ 2·73	− 0·46	...	...
...	Kimberley	28 38	24 43	1170	− 1·40	− 0·2	...	...	...
...	Schoongezicht	28 19	26 24	1390	− 2·54	− 1·3	...	...	...
...	Theronskop	28 19	26 47	1580	− 1·09	+ 0·1	...	...	...
7	Salt Lake	27 55	30 4	1410	+ 6·07	+ 7·07	+ 6·43	...	...
...	Brannzijn Kop	27 51	26 56	1470	− 1·89	− 0·9	...	...	...
...	Zoetvlei	27 50	26 22	1320	+ 0·90	+ 1·9	...	...	...
8	Newcastle	27 46	29 56	1190	+ 1·27	+ 2·22	+ 1·82	...	...
9	Hermitage	27 45	29 21	2320	− 0·95	− 0·01	− 0·39	...	...
...	Boschrand	27 44	27 11	1450	− 0·98	0·0	...	...	...
10	Vierfontein	27 41	28 35	1770	− 3·78	− 2·86	− 3·13	...	...
11	Kaalkop	27 35	29 3	1940	− 1·03	− 0·13	− 0·26	...	...
12	Inkwelo	27 31	29 50	2080	+ 5·14	+ 6·01	− 5·98	...	...
13	Gemsbokberg	27 27	29 26	2090	− 3·40	− 2·55	− 2·48	...	...
...	Driekul	26 45	26 2	1540	− 3·81	− 3·1	...		...
14	Johannesburg	26 11	28 5	1810	− 9·66	− 9·25	− 6·98	...	...
15	Muckleneuck / Meintjeskop	25 45	28 12	1450	− 5·26	− 4·94	− 2·26	...	− 1·83
16	Belfast Base S.	25 40	30 4	1950	− 3·74	− 3·44	− 0·66	...	− 0·35
...	Ottoshope B.N.	25 39	25 55	1440	− 5·06	− 4·8	...	...	...
17	Langekloof	25 37	29 59	1930	− 4·80	− 4·52	− 1·65	...	− 1·42
18	Marés Kop	25 34	30 11	2220	− 3·89	− 3·62	− 0·69	...	− 0·53
19	Belfast B.N.	25 30	30 4	2220	− 5·18	− 4·94	− 1·89	...	− 1·86
20	Houts River B.S.	23 51	29 14	1420	− 3·17	− 3·47	+ 2·09	...	− 0·53
21	Schnells Kop	23 48	29 57	1900	− 5·43	− 5·75	− 0·10	...	− 2·81
22	Houts River B.N. / Loskop	23 32	29 20	1130 / 1430	− 0·77	− 1·18	+ 4·88	...	+ 1·73
...	Blaauberg	23 4	28 59	2040	−15·02	−15·5	...	...	...
...	Lejuma	23 1	29 26	1740	− 8·84	− 9·3	...	...	...
23	Inugu	20 30	28 24	1470	+ 3·50	+ 2·05	...	+ 4·34	+ 4·69
24	Golati	20 29	28 36	1550	+ 4·75	+ 3·30	...	+ 5·58	+ 5·94
25	M'Quilembegwe	20 26	28 45	1550	− 0·26	− 1·74	...	+ 0·53	+ 0·90
26	Thabas Inyorka	20 19	28 41	1510	+ 3·59	+ 2·07	...	+ 4·27	+ 4·70
27	Buluwayo	20 9	28 35	1400	− 6·64	− 8·23	...	− 6·11	− 5·60
28	Inseza Base S.	20 6	29 9	1260	+ 0·77	− 0·83	...	+ 1·26	+ 1·78
29	" " N.	19 57	29 4	1370	0·00	− 1·65	...	+ 0·34	+ 0·94
30	Gwelo	19 28	29 50	1490	+ 4·50	+ 2·67	...	+ 0·40	+ 5·23
31	Iron Mine	19 19	30 22	1500	− 0·85	− 2·72	...	− 1·07	− 0·18
32	Zomtimba	19 16	30 13	1500	− 0·47	− 2·37	...	− 0·74	+ 0·17
33	Mahamara	19 5	30 17	1440	− 0·92	− 2·89	...	− 1·38	− 0·37
34	Salisbury	17 50	31 2	1530	+ 3·52	+ 1·10	...	+ 1·95	+ 3·51
35	Marimba	17 47	30 50	1460	− 1·16	− 3·60	...	− 2·80	− 1·20
36	Muneni	17 30	30 34	1570	− 1·91	− 4·46	...	− 3·81	− 2·08
37	Baruka	17 19	30 6	1370	+ 0·35	− 2·27	...	− 1·70	+ 0·10
38	Unvukwe	17 12	30 41	1750	− 3·86	− 6·53	...	− 6·05	− 4·18
39	Manyangau	16 26	29 36	1410	− 6·18	− 9·12	...	− 9·08	− 6·85
40	Msambamsou	15 54	30 0	1230	− 4·46	− 7·62	...	− 7·85	...
41	Kapsaku	15 40	30 17	1060	− 2·79	− 6·04	...	− 6·40	...
42	Kaurashisi	15 20	29 47	1410	+ 4·37	+ 0·99	...	+ 0·46	...
43	Machechetti	14 57	29 54	1330	+ 1·29	− 2·24	...	− 3·00	...
44	Mkokomo	14 47	30 30	1210	+ 1·71	− 1·90	...	− 2·74	...
45	Chifikunya	14 26	29 52	1490	+ 9·13	+ 5·40	...	+ 4·37	...
46	Kweshi	13 58	30 40	1400	+ 1·23	− 2·69	...	− 3·98	...
47	Ulungu	13 46	30 4	1510	+11·07	+ 7·08	...	+ 5·67	...
48	Mtense	13 15	31 6	1670	+15·07	+10·85	...	+ 9·18	...
49	Msengule	13 14	30 33	1660	+11·31	+ 7·08	...	+ 5·38	...
50	Mabyulu	12 54	30 57	1720	+ 3·31	− 1·03	...	− 2·91	...
51	Maienze	12 29	31 18	1670	+ 9·23	+ 4·72	...	+ 2·62	...
52	Lavusi	12 24	30 52	1790	+ 5·45	+ 0·90	...	− 1·25	...
53	Iwangwe	11 59	31 37	1830	+12·45	+ 7·78	...	+ 5·41	...
54	Chipala	11 27	32 1	1430	+ 8·86	+ 3·92	...	+ 1·26	...
55	Mukowonshi	11 25	31 31	1830	+ 5·37	+ 0·43	...	− 2·26	...
56	Kangawakadi	10 14	31 30	1440	+ 9·31	+ 3·88	...	+ 0·55	...
57	Mapange	9 41	31 41	1440	+ 8·82	+ 3·14	...	− 0·48	...

Digitized by Google

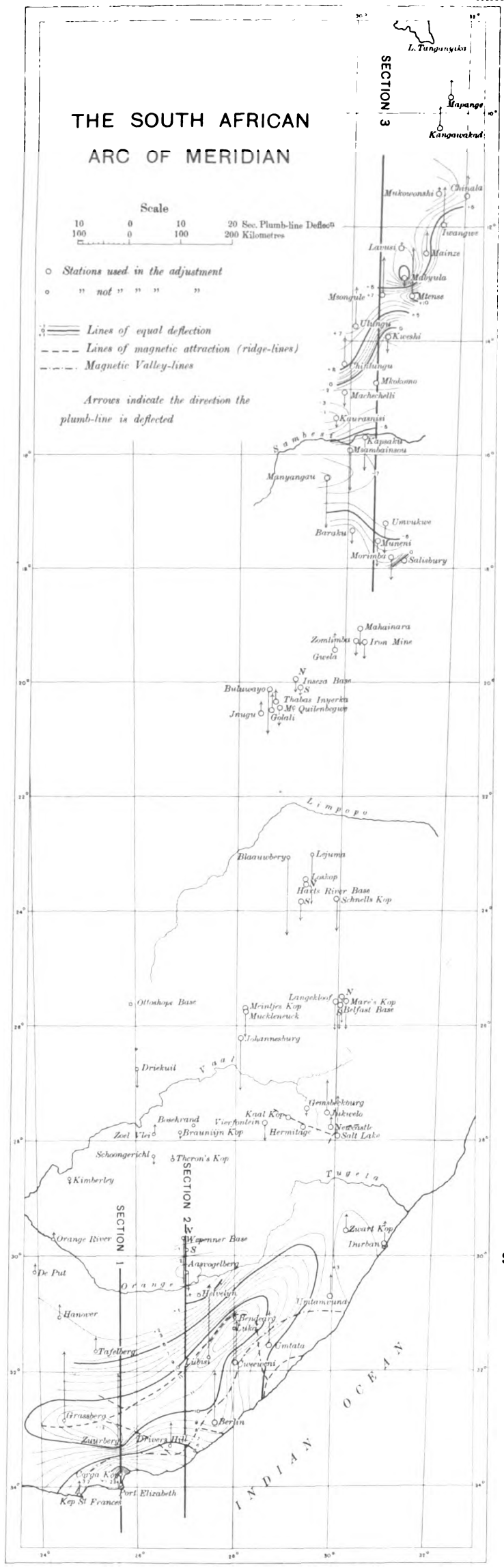

SECTIONS

1. Merid. 25°40′ E. of Greenwich

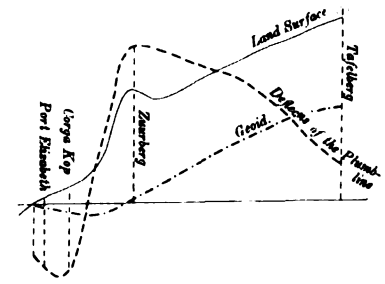

S N

2. Merid. 27°

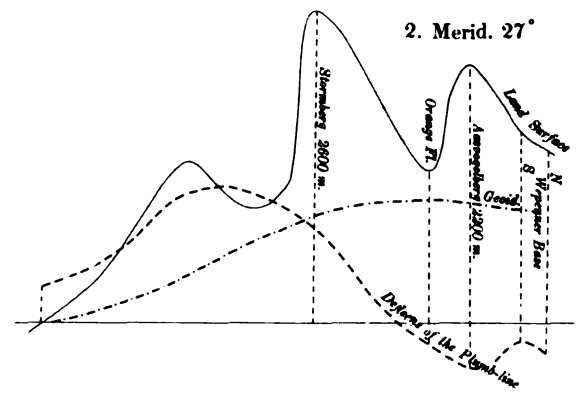

Scale for Sections 1 & 2

Horizontal Scale	100	50	0	100 Kms
Vertical "	1000	500	0	1000 Metres
" " for Geoid	10	5	0	10 Metres
Scale for Deflecns of Plumb-line	10	5	0	10 Seconds

3. Merid. 30°30′ (Rhodesia)

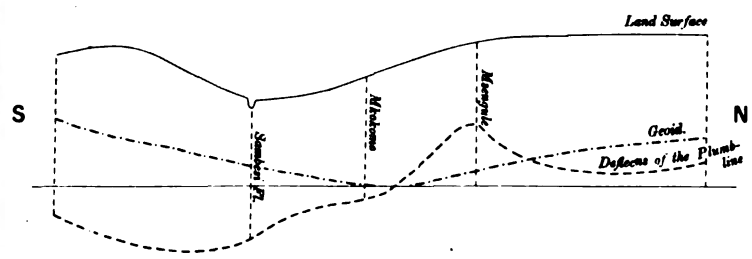

Scale for Section 3

Horizontal Scale	100	50	0	100 Kms.
Vertical "	1000	500	0	1000 Metres
" " for Geoid	10	5	0	10 Metres
Scale for Deflecns of Plumb-line	10	5	0	10 Seconds

Printed at the Ordnance Survey Office, Southampton, 1913

To follow page CXC.

Digitized by Google

Digitized by Google

DESCRIPTION OF THE CAPE OBSERVATORY.

PART I.

THE VICTORIA TELESCOPE AND ITS OBSERVATORY.

Digitized by Google

Digitized by Google

PART I.

THE VICTORIA TELESCOPE
AND ITS OBSERVATORY.

THE VICTORIA TELESCOPE.

THE history of this instrument, so far as the Cape Observatory is concerned, begins with the following letter, which was received by H.M. Astronomer in the beginning of September 1894:—

RUSTHALL HOUSE, TUNBRIDGE WELLS,
10*th August* 1894.

DEAR DR GILL,—It has been my wish for some time past to offer a large Telescope, equipped for Photographic and Spectroscopic work, to one of the Public Observatories in the Southern Hemisphere—and by preference to the Royal Observatory at the Cape of Good Hope.

With this object I have now arranged with Sir Howard Grubb for the construction of a Photographic Refracting Telescope of 24 inches aperture and 22 feet 6 inches focal length. Also for an Object-Glass Prism to work with it, having a refracting angle of 7½ degrees, and the same aperture. Coupled with the Photographic Telescope there is to be a Visual Refracting Telescope of 18 inches aperture. The Telescope Mounting is to give circumpolar motion to the Telescope up to 30 degrees within the Zenith; the Mounting to be sufficiently elevated to allow a fair-sized slit Spectroscope, for the determination of Stellar Motions in the line of sight, to be attached to the Photographic Telescope. Such a Spectroscope will be subsequently provided, and also an Observatory of light construction.

May I ask if you, as Astronomer-Royal at the Cape, would be willing to accept such an Instrument, and in that case if the Official Trustees of the Observatory would be prepared to provide any assistance necessary for its efficient use?—I remain, dear Dr Gill, yours faithfully, (Signed) FRANK M'CLEAN.

P.S.—I should perhaps mention that the Telescope has been for some time in progress, and that by the end of January last the large Prism, in the rough, had been delivered, and the glass for the lenses had for some time awaited instructions for moulding. Also the complete design, as it stands (with the exception of the decision as to making the Object-Glass convertible or not), had been practically settled. Subject to an alternative in the same respect, the definite order for the Instrument was given on the 4th May last. It has now been further decided not to make the Object-Glass convertible, but the delay in this respect has scarcely been thrown away, as it has resulted in the addition of the 18-inch Visual Telescope to the Instrument.

This letter gave rise to the following correspondence:—

DR GILL to FRANK M'CLEAN, Esq., M.A.

ROYAL OBSERVATORY, CAPE OF GOOD HOPE,
1894 *September* 11.

DEAR MR M'CLEAN,—Your letter of the 10th August duly reached me by last mail, and I have no words which can adequately express my feelings on receipt of it.

The splendid generosity of such a gift, the great scientific need which it fulfils, the prospect of the gratification of scientific hope and aspirations which I have long cherished and had sorrowfully begun to abandon—all these have been constantly in my mind since the arrival of your letter.

As Her Majesty's Astronomer at the Cape I thank you for the noble gift which you propose to make to this Observatory; and subject to the approval of the Lords Commissioners of the Admiralty, I cordially and gratefully accept it.

One can hardly doubt that such an offer will be met by the Lords Commissioners of the Admiralty and by H.M. Treasury in a like generous spirit, and that they will be prepared to consider the question of providing the additional assistance necessary for the efficient use of the instrument.

A copy of your letter will be forwarded by this mail to the Admiralty, together with a copy of this reply.—I remain, dear Mr M'Clean, yours faithfully, (Signed) DAVID GILL.

Digitized by Google

THE SECRETARY OF THE ADMIRALTY to Dr GILL, H.M. Astronomer.

ADMIRALTY, 24*th November* 1894.

SIR,—I am commanded by My Lords Commissioners of the Admiralty to send you a copy of a letter from Mr F. M'Clean, dated 26th October, offering to present to the Observatory an Astronomical Telescope with its equipment, together with copy of their Lordships' reply accepting this generous offer.—I am, etc., (Signed) EVAN M'GREGOR.

Enclosures:—

Mr FRANK M'CLEAN to SECRETARY OF THE ADMIRALTY.

DEAR SIR,—I beg to submit for the consideration of the Lords Commissioners of the Admiralty, the offer on my part to present to the Royal Observatory at the Cape of Good Hope, the Astronomical Telescope with its Equipment, described in the accompanying Memorandum.

This proposal has been already communicated to Dr Gill, the Astronomer-Royal at the Cape of Good Hope, and meets with his approval.

I venture to hope that the Lords Commissioners of the Admiralty will accept the offer, and that they will also furnish any assistance necessary for the efficient use of the Instrument.—I am, dear Sir, yours faithfully, (Sgd.) FRANK M'CLEAN.

Memorandum accompanying letter of same date to the Secretary of the Admiralty.

It has been my wish for some time past, to offer a large Telescope equipped for Photographic and Spectroscopic work, to one of the British Observatories in the Southern Hemisphere, and by preference to the Royal Observatory at the Cape of Good Hope.

With this object I have now made arrangements with Sir Howard Grubb for the construction of a Photographic Telescope of 24 inches aperture and of 22 feet 6 inches focal length; also for an Object-Glass Prism to work with it, having a refracting angle of 7½ degrees and the same aperture. Coupled with the Photographic Telescope there is a Visual Refracting Telescope of 18 inches aperture. The Telescope Mounting is to allow of the circumpolar motion of the Telescope for 30 degrees within the Zenith.

The Mounting is also to be sufficiently elevated to allow a fair-sized slit Spectroscope suitable for the determination of Stellar Motions in the line of sight to be attached to the Photographic Telescope. Such a Spectroscope will be subsequently provided, and also an Observatory of light construction, for the whole Instrument.

I should mention that this Telescope has been in progress for some time. In January last the glass intended for the 24-inch Object-Glass was awaiting instructions for moulding, and the Object-Glass Prism, in the rough, had been delivered by the manufacturers. The design for the Telescope Mounting had been then practically settled. The definitive order for the Instrument was given on the 4th May last, subject to one alternative as to Object-Glass. The arrangement to have both a Photographic and a Visual Telescope was subsequently made. (Sgd.) FRANK M'CLEAN.

SECRETARY OF THE ADMIRALTY to Mr FRANK M'CLEAN.

ADMIRALTY, 14*th November* 1894.

SIR,—I have laid before My Lords Commissioners of the Admiralty your letter of the 26th ult., offering to present to the Royal Observatory at the Cape of Good Hope, an Astronomical Telescope, with its Mounting, Observatory, and Equipment for Photographic and Spectroscopic work, as described in the Memorandum which accompanied your letter.

My Lords direct me to state that they accept, with warm appreciation of your generosity, the offer of this splendid Instrument, the possession of which will greatly increase the utility of the Cape Observatory, and may be expected to result in considerable advantage to science.—I am, etc., (Sgd.) EVAN M'GREGOR.

The subsequent correspondence with Mr M'Clean and Sir Howard Grubb relative to structural details would constitute several large volumes, and need not be quoted. It is sufficient here to state that the observatory building and dome were erected in 1896, with the exception of such internal parts of the building as could not be finished until the telescope was erected.

The rising floor and hydraulic machinery arrived in the end of 1896, and their erection was completed in 1897.

The equatorial mounting and object-glasses, packed in forty-four cases, reached Table Bay on the 11th April 1898, and within six weeks all the parts were mounted and adjusted. It was found that the stand required considerable modification to secure the necessary rigidity, and Mr M'Clean most generously authorised the carrying out of all necessary alterations. The requisite iron castings and stays were designed, made, and fitted at the Cape, and the stand was rendered in every respect most steady, satisfactory, and convenient. The fittings for electrical illumination of the circles, scales, and micrometers, including the switches, rheostats, and fuses, were made or re-modelled at the Cape.

The hydraulic motor (with its reversing gear and valves) for rotating the dome arrived at the Cape on the 4th July, and the hydraulic ram and valves for automatic clock-winding on the 11th October 1898. By the 1st November the whole of the essentials of the observatory and stand were fitted and in working order.

The 18-inch visual object-glass proved to be a very fine one.

Digitized by Google

The 24-inch photographic object-glass had two faults:—the marginal images showed well-marked *Coma*, and the minimum focus, instead of being for rays of the refrangibility of Hγ (or, if anything, on the violet side of Hγ), is for rays of refrangibility about midway between Hβ and Hγ.

After many proof plates and other trials with different distances of separation between the lenses, the object-glass was returned to Sir Howard Grubb on the 21st October 1899, and was received back on the 16th February 1901. After a series of experimental tests it was definitely accepted as satisfactory.

This completion of Mr M'Clean's munificent gift was marked by the insertion in the north-west front of the observatory of a stone bearing the following inscription, which had been cut in accordance with the donor's instructions during his visit to the Cape in 1896.

· 1897 ·

THE VICTORIA TELESCOPE
THE GIFT OF FRANK McCLEAN
· OF RUSTHALL · KENT ·
DAVID GILL H·M·ASTRONOMER·

The ceremony of unveiling the stone was performed by His Excellency the Governor, the Hon. Sir Walter Hely Hutchinson, G.C.M.G., on the 10th September 1901.

His Excellency stated that it had been the desire of H.R.H. the Duke of Cornwall and York (now Prince of Wales) to perform that ceremony on the occasion of his recent visit to the Cape; but, owing to the great number of public engagements which had been pressed upon His Royal Highness, it had fallen to his (the Governor's) part to do so.

The following address was delivered on the occasion by H.M. Astronomer:—

"MAY IT PLEASE YOUR EXCELLENCY,—The ceremony which I am about to ask Your Excellency to perform is one regarding which some explanation seems to be necessary. We all understand the significance of the laying of a foundation stone or the formal opening of a new building, but it is evident that the function of to-day represents neither the one nor the other. Your Excellency will therefore perhaps permit me to enter into a short account of the origin and history of this great telescope and of the observatory under the dome of which we are now assembled. If in so doing I appear at first somewhat discursive, I trust to be forgiven on account of the interest of the subject and of the occasion. Until about forty years ago the science of astronomy concerned itself chiefly with the positions of celestial objects. It occupied itself with the observation of their apparent places in the sky, tracing the origin of their motions, and finally computing and predicting these motions for all past and future time. It has measured not only the dimensions and determined the elements of our planetary system, but it has also made no small progress towards a knowledge of the dimensions of the Sidereal System and of the amount and direction of our sun's motion through space. It has catalogued the stars to a high order of magnitude, and determined many facts as to their distribution in space. There is no subject to which higher genius has applied itself than that of unravelling the celestial motions and the laws which govern them. Thus the old astronomy, from the difficulties of her task, the beauty and precision of her methods, and the proved accuracy of her predictions, has earned for herself the acknowledged position of Queen of the Sciences. But her task is by no means ended, for the so-called old astronomy still provides, and for ever will provide, a boundless field for research and for exercise of the highest efforts of the human intellect.

"Sixty years ago no one believed it possible that astronomy could embrace the study of the constitution as well as the motions of celestial objects. It is true that the speculations of Laplace seemed so well based, and to fit so

Digitized by Google

well with known facts and scientific possibilities, as to afford the belief that the sun and planets had been evolved from common primordial matter. But Laplace's views could only be regarded in the light of a hypothesis; they were not capable of that proof which is necessary to raise speculation, however plausible, to the level of scientific truth. Comte, in his *Cours de Philosophie Positive*, expressed the opinion of his time thus: 'We may speculate with some hope of success on the formation of the Solar System of which we form a part, for it presents to us numerous perfectly well-known phenomena, susceptible perhaps of giving proof of its true immediate origin. But what, on the other hand, could possibly form a rational basis for our conjectures on the formation of other suns? How confirm or disprove by the evidence of phenomena any cosmogonical hypothesis when no phenomena of such a kind are known, nor, doubtless, are even knowable?' In other words, the philosophic dictum of sixty years ago was that the chemical constitution of other systems than our own is a subject which, from the nature of things, must be regarded as unknowable. But the discovery of the lines in the Solar Spectrum by Fraunhofer, the interpretation of the meaning of these lines by Kirchhoff and Bunsen, and the application of the spectroscope to other celestial objects has upset that philosophic conception of the unknowable, and given to us the new astronomy.

"This new astronomy deals not so much with the position as with the constitution of celestial objects. Its aim is not so much to answer the question *where is such a star*, but *what is it*, what can we find out about its chemical constitution, and the chemical history of its development? But with all this distinctive difference between the new and the old astronomy, it is impossible to divorce the one from the other. There is perhaps no finer illustration of the co-relation of the physical sciences than is to be found in the outcome of this new development of astronomy. The old astronomy required the combined efforts of the optician, the mechanician, the engineer, the observer, and the mathematician for its pursuit, the new astronomy adds those of the physicist and the chemist, and we are every day finding out not only how each and all of these branches of science contribute to the advancement of astronomy in general, but also how their common application to astronomy has contributed to the advancement of those separate sciences. I may perhaps be permitted to dwell briefly on this most interesting subject. The fact that light travels with a measurable velocity was first demonstrated by Roemer in 1675, because he found that the eclipses of Jupiter's Satellites apparently occurred too soon when the earth is near Jupiter and apparently too late when far from Jupiter—a phenomenon that could only be accounted for on the assumption that light travels with a measurable velocity. Here, then, is a notable contribution by the old astronomy to the science of physics. Newton, as every one knows, showed how sunlight, after passing through a slit and a prism, was split up into its component colours. Fraunhofer in 1815 proved that this spectrum, or coloured ribbon, viewed with more perfect appliances than Newton employed, is crossed by fine dark lines; in other words, that certain very definite kinds of refrangibility, or colours of light, are wanting in the solar spectrum. Fraunhofer actually measured the position in the spectrum of 600 of these lines, but their significance remained a mystery until 1859, when the explanation was found by Kirchhoff and Bunsen. They showed that substances in a state of vapour absorb rays of the same refrangibility as they themselves, when sufficiently heated, emit—and that the dark lines in the solar spectrum are produced by the absorption of vapours of metals, etc., which exist in the solar atmosphere, many of these metals, etc., being the same as those with which we are familiar, such as iron, calcium, sodium, magnesium, hydrogen, etc. With this discovery the new astronomy sprang into life. Sir William Huggins, the present President of the Royal Society, was the first to apply, in a really crucial and scientific manner, this new engine of research to other systems than our own. With infinite labour and ingenuity he designed and had constructed a spectroscope applicable to analysis of the light of celestial objects. It was requisite that this spectroscope should be mounted on a telescope, so that the comparatively faint light of a star might be collected by the object-glass, and be projected at its focus on a slit of one or two thousandth parts of an inch in width, and be retained steadily on that slit, in spite of the diurnal motion of the earth. Farther, it was necessary to provide means by which the infinitely small point of light formed by the star's image should be widened, so that there should be seen in the field of view, not a mere coloured line, but a coloured ribbon of appreciable width. Finally, means had to be contrived for introducing into the slit (just as if it had come from the star) the light given off by terrestrial substances in a state of incandescence, so that the dark lines in the spectrum of the star might be compared with the bright lines of the spectra of terrestrial substances. The labour of overcoming all these difficulties was great, but great also was the reward. To use Huggins' own words: 'The time was, indeed, one of strained expectation and of scientific exaltation for the astronomer, almost without parallel; for nearly every observation revealed a new fact and almost every night's work was red-lettered by some discovery.' Time does not allow me to proceed in the order of history nor to classify the work done by Huggins and his successors. The spectra of vast numbers of the stars were shown to be identical with those of the sun, the spectra of others were less complex, of others more so, but all contained evidence of the existence of chemical substances which are contained in our globe. As powerful telescopes had shown many objects, previously supposed

Digitized by Google

to be only nebulous, to consist of separate stars, the belief naturally began to be held that all nebulæ were in reality distant systems of stars which would be seen as such if only adequate optical means and sufficiently clear and steady atmospheric conditions were available. But Huggins' spectroscope showed that many nebulæ were not stars at all, that many well-condensed nebulæ, as well as vast patches of nebulous light in the sky, gave only bright lines in the spectroscope—lines which proved that such nebulæ were not stars at all, but inchoate masses of luminous gas. Evidence upon evidence has accumulated to show that such nebulæ consist of the matter out of which stars (*i.e.*, suns) have been, and are being, evolved. The different types of star spectra form such a complete and gradual sequence (from simple spectra resembling those of nebulæ, onwards through types of gradually increasing complexity) as to suggest that we have before us, written in the cryptograms of these spectra, the complete story of the evolution of suns from the inchoate nebulæ onwards to the most active sun (like our own) and then downward to the almost heatless and invisible ball. The period during which human life—nay, even life of any kind—has existed on our globe is probably too short to afford observational proof of such a cycle of change in any particular star, but the fact of such evolution, with the evidence before us, can hardly be doubted. I most fully believe that when we have farther studied the modifications of terrestrial spectra, under sufficiently varied conditions of temperature, pressure, and environment, our certainty of the fact will be greatly increased. But in this study we must also have regard to the spectra of the stars themselves. The stars are the crucibles of the Creator. There we see matter under conditions of temperature and pressure and environment, the variety of which we can hardly hope to emulate in our laboratories, and on a scale of magnitude beside which the scale of our greatest experiment is less than that of the drop to the ocean. I believe we must look to the new astronomy for aid in the solution of many great chemical problems.

"The astronomer of the new school has to thank the physicist and the chemist for the foundation of his science, but the time is coming—we almost see it now—when the astronomer will repay the debt by wide-reaching contributions to the very fundamenta of chemical science. Thirty years ago there was first observed, in the spectrum of the sun's chromosphere, a very remarkable bright yellow line, near the position of the well-known D lines of Sodium. So distinctive was this line, and so certainly not due to any known terrestrial substance, that it was called the Helium line. In 1894 Lord Rayleigh, who was engaged in determining the densities of the principal gases, found what was then to him an inexplicable difference between the weight of a volume of nitrogen prepared from atmospheric air and the weight of the same volume of nitrogen prepared from ammonia or by other chemical means. Repeated experiment showed that the weight of the constant volume of atmospheric nitrogen was about $\frac{1}{200}$ greater than that of the chemically prepared gas. After exhausting all means of testing the purity of the chemically prepared nitrogen, Lord Rayleigh and Professor Ramsay, in January 1895, finally traced the cause of their perplexity to a hitherto unknown gas present in our atmosphere which they named Argon. Here was a great chemical discovery due to the co-operation of the physicist and the chemist. On the publication of this paper Mr Meirs of the British Museum directed Ramsay's attention to a paper by Hildebrand, in which the author had found that the mineral uranite contained nitrogen; and Ramsay naturally was desirous of examining every source of nitrogen. Accordingly he boiled cleveite—a uranite of lead containing rare earths—with weak sulphuric acid, and after collecting the evolved gas he found that its spectrum gave not only the now known Argon lines but also new lines, one of which, to Ramsay's intense surprise and delight, absolutely coincided with the Helium line, which had been known for twenty-six years in the spectrum of the solar chromosphere. Of course, as soon as Helium was prepared, its spectrum was thoroughly studied, and then Lockyer and M'Clean were quick to show that many of the lines, which occurred in the spectra of a large class of stars, were due to this same Helium. Here was another chemical discovery in which the astronomer and the chemist were mutually helpful—a discovery also that is yet destined to throw much light on the evolution of stars.

"One more illustration, and I am done. The study of the phenomena of light has compelled the conviction that light is the result of vibrations or waves in ether, as sound is the result of vibrations in air, and that just as slow and rapid vibrations of air produce respectively low- and high-pitched notes, so do slow and rapid vibrations of ether produce red and yellow or blue and violet light respectively. If now one imagines oneself standing beside a railway track and that an engine comes along sounding its whistle, it is clear that as the engine approaches the bystander more waves of sound of the whistle would reach the ear in a second of time than if the engine were at rest. As a consequence of this, if the engine is travelling at a rate in any way comparable with the velocity of sound, a sharper note will be heard than if the engine were at rest—on the other hand, if the engine is running away from the bystander the pitch of the whistle will, for a like reason, be lowered. The matter is easily put to the test by any one who chances to be beside a railway track when an engine blowing its whistle is approaching at high speed; the instant that the engine passes, a sudden lowering of the whistle-note will be perceived. If

Digitized by Google

one had a tuning-fork, emitting the exact note given by the railway whistle when at rest, it would be possible, with the aid of another suitable whistle that could be tuned to the note of the moving whistle, to determine the velocity of approach or recession of the train from the difference of the number of vibrations per second between the two forks. Just in the same way, if we knew the exact wave-length of a particular line in the spectrum of a star, and if we observe the wave-length of the same ray as it reaches the earth, we have a means of determining the velocity of approach or recession of the star, provided that the velocity of the star's motion has a measurable relation to the velocity of light. Doppler pointed out this possibility in 1841, but it was not until Huggins had begun stellar spectroscopy that, about 1865, he turned his attention to this possibility of the new astronomy, and in 1866 made the first attempts to determine motions in the line of sight. Such a task was, of course, impossible until the lines of the star spectra had been identified with those of known terrestrial substances, just as it would have been impossible for an observer to determine the velocity of a railway train at any moment by means of the note of the whistle that reached his ear, unless the observer also had a tuning-fork emitting the same note as the whistle of the engine when at rest. But Huggins had already identified many star lines with those of terrestrial spectra, and, so far, was in a position to attempt the task. He showed in 1866 that such work was possible, but it required the application of photography (first used for this purpose by Vogel) and exhaustive study of the theory of the spectroscope, and the greatest refinement in its construction and its use, to give the new engine of research the requisite reliability. These preliminary difficulties are now overcome, and daily results of the greatest importance are being added to our storehouse of knowledge.

"It would occupy too long were I to enter on the numerous problems to which this branch of the new astronomy is applicable, but it will be evident how great an advantage to astronomy must be this new power to determine not as formerly, only angular velocity at right angles to the line of sight, but the actual linear velocity of motion in the line of sight itself. These examples, which I fear I have quoted at too great length, enable me to explain in a few words the full significance of the ceremony which we have assembled to-day to witness.

"Until the year 1894, there existed neither at the Cape nor in any observatory in the Southern Hemisphere, any adequate equipment for pursuit of the new astronomy, nor was there apparently much hope of the need being supplied. For forty years the new astronomy had been vigorously prosecuted in the Northern Hemisphere, the first great harvest of results obtainable with moderate means had been reaped, and great establishments were founded for research in the new fields of work. It thus became obvious that if anything was to be done to equalise the possibilities of research in these new fields in both hemispheres, no small outlay would be required. On my appointment as H.M. Astronomer in 1879, Mr Newall, who then possessed the largest telescope in England, offered the loan of it for a period of years to prosecute research in the new astronomy at the Cape, but it was considered by the authorities at home that the cost of its transport and the erection of a suitable building and dome could not be entertained unless the telescope might remain permanently the property of the Observatory. Mr Newall had good reason for limiting his offer to loan; for his son, then a young man, gave promise of scientific tastes, and he is now using that instrument at Cambridge, and obtaining with it the most refined spectroscopic results that have yet been secured in England. The busy years rolled on, and I had almost resigned myself to the idea that, during the period of my directorate at least, the Royal Observatory at the Cape must limit itself to the pursuit of the old astronomy, for which purpose it was well equipped. But in 1894 arrived a letter from Mr Frank M'Clean, offering to present, for the use in the Southern Hemisphere, and preferably to the Cape, a telescope and observatory the specification for which corresponds with the instrument now before us and the building in which we are now assembled. Mr M'Clean further stated that the optical part of the instrument had been for some time under construction by Sir Howard Grubb, of Dublin, and the whole would probably be completed before the end of 1896. The new instrument was also to be fitted with object-glass, prism, spectroscopes, etc., so that, upon the completion of all, the Cape Observatory might enter on the pursuit of the new astronomy with every advantage possible in the way of equipment. Here was indeed a revival of hopes almost dead, of ambitions almost abandoned. The value of the gift was, if possible, enhanced by the fact that Mr M'Clean is himself a distinguished worker in Astrophysics. One had seen his splendid photographs of terrestrial spectra, one knew something, but not all, of the great work on which he was then engaged, viz., of obtaining intercomparable spectra of all the stars to the $3\frac{1}{2}$ order of magnitude, and one felt that his gift was due solely to a clear and well-founded perception of the needs of science and of an earnest and helpful desire to fulfil them. The Lords Commissioners of the Admiralty accepted, with warm appreciation of Mr M'Clean's generosity, the offer of this splendid instrument and expressed the view that its possession would greatly increase the utility of the Cape Observatory, and might be expected to result in considerable advancement to science. The year 1896 saw the Observatory building ready for reception of the telescope and the dome erected. In the following year Mr M'Clean visited the Cape, attached his object-glass prisms to our photographic telescope, and was

Digitized by Google

thus enabled to complete that remaining portion of his spectroscopic survey of the whole heavens which could not be completed from his own observatory in Kent. His work at the Cape was also memorable by his discovery of the existence of oxygen in the spectra of a certain class of stars, and for this discovery and his spectroscopic labours generally he was awarded the gold medal of the Royal Astronomical Society of London in 1899. With the fullest expectation that the instrument would be erected during 1897, Mr M'Clean had ordered the inscription stone which Your Excellency is about to uncover to be prepared. It was not until April 1898 that forty-four cases containing the telescope arrived from Dublin, nor until November of the same year that all was complete and ready for testing. Then another disappointment was in store. The large object-glass was, after exhaustive trials, found to be defective in some particulars, and, at the request of Sir Howard Grubb, it was sent to Dublin in October 1899 for correction, and was not returned to the Cape until early in the current year. The insertion of the inscription stone had been delayed until the telescope might be regarded as complete, and it is only within the past two or three months that the final tests have assured us that this may now be regarded as the case. It remained only to wait for a fitting time and occasion to perform the ceremony of uncovering the stone—a gracious office which you, Sir, have kindly undertaken to perform to-day. It will be found when you have done so that the stone bears the inscription, 'The Victoria Telescope,' and the date 1897, the year when the donor intended that the telescope should be completed and this ceremony performed. It is named the Victoria Telescope in honour of the great and good Queen whose jubilee it was intended to celebrate, and to whose beloved memory only it must now stand. I venture to hope it will long stand to honour that memory and to fulfil, by useful work, the noble intentions of its large-minded donor."

GENERAL DESCRIPTION OF PLATES I., II., III., AND IV.

Before describing any parts of the Victoria Telescope in detail, it may be well, in the first place, to deal with the general arrangement of the instrument and the plans of the observatory.

Plate I. is an elevation and vertical section in the plane of the meridian.

Plate II. a ground plan showing also the hydraulic gear employed for raising and lowering the floor, for turning the dome, and winding the driving clock.

Plate III. gives an external view of the observatory from N.W. by W.

Plate IV. shows the observatory and laboratory from the east.

The equatorial mounting of the telescope is supported on the pier A (Plate I.); the latter is built on a deep foundation of concrete as shown. The base of the mounting rests on three iron blocks, A1, A2, and A3 (Plate II.); the points of strong screws, which pass through flanges of the iron base of the mounting B, bear in slots cut in these iron blocks.

The screw which bears on block A3 serves for the final adjustment of the altitude of the polar axis. When this has been adjusted, two other screws, bearing on horizontal iron surfaces at A4 and A5, are screwed up just tight enough not to disturb a sensitive level mounted on the iron pier. These screws, so adjusted, remove a tendency to tremor which otherwise might exist.

The hollow cast-iron box B supports the equatorial mounting proper, which is attached to the single casting CD. The upper flange of B and the lower flange of CD are accurately planed. The final adjustment of the polar axis in the plane of the meridian is effected by moving the northern end of CD in the direction east or west by a pair of powerful opposing screws, whilst the southern end is prevented from lateral motion by a pin which passes through the centre of the southern flanges of B and CD. When this adjustment has been effected, the flanges of B and CD are secured together by bolts which pass through elongated holes in the flanges.

The casting B encloses W the clock-weight; α is a hydraulic valve operated by the weight W; the latter, on nearly reaching the bottom of its fall, opens the valve of α and admits water at high pressure to the ram β, which winds up the driving clock contained in C (see subsequent description of the hydraulic gear).

The upper part of the casting CD contains all things connected with the lower end of the polar axis, such as the driving sector, the driving screw with its mounting, the wheels and appliances for control of the driving clock, the means for giving quick and slow motion in Right Ascension, etc.

At γ (Plate I.) is one of a pair of wheels for moving the instrument in R.A. when pointed to an object near the pole, or for setting in R.A. by the hour circle.

Digitized by Google

The Declination axis carries at one extremity three telescopes, viz :—

The Photographic Telescope, 24 inches aperture and 22½ feet focus.
„ Visual „ 18 „ „ „
„ Guiding „ 8 „ „ „

The Photographic Telescope is shown carrying the Spectroscope as originally designed.

For convenience in observing, the floor is made to rise through a range of 9 feet, so that at all altitudes at which good observations can be made the observer has easy and comfortable access to the eyepiece. The rising floor consists essentially of an equilateral triangle formed of three rolled steel girders of great strength. Upon this steel triangle is mounted a well-designed cantilever system of pitch-pine girders to which the planking is nailed; the whole is suspended by strong steel ropes from the three corners of the steel triangle.

When at its lower point the floor rests on the piers η, θ, λ; when at its highest point it occupies the position shown in dotted lines (Plate I.).

The floor is double-planked, the lower planking of pitch pine, the upper of teak; the seams of the teak run at right angles to the seams of the pitch-pine flooring. The whole is a most rigid construction weighing 12 tons. Ten persons can stand together at any point or position of the floor with perfect safety.

The wire ropes for suspending the floor hang over the three larger pulley wheels μ, and support the twin weights ω—each pair of which weighs 3½ tons; one of these wheels, μ, is shown in Plate I. Attached to ω, as shown in Plate I., is a thinner wire rope which, passing over the pulley wheel π_1, goes (Plate II.) to the pulley wheel ρ (attached to the western end of the hydraulic ram), thence to the triple pulley wheel σ (attached to the end of the plunger of the ram), and the end of the rope is made fast at τ. Another wire rope similarly attached to another of the double weights passes over the pulley wheel π_2, then over the pulley wheel ϕ_1, thence round the triple wheel σ, and is also made fast at τ. The third rope passes over the pulley wheel π_3, goes directly on to the triple pulley σ, and is made fast at τ.

If now water is forced into the hydraulic ram, the piston (or plunger) will move out towards χ, and will simultaneously and equally pull the three wire ropes which pass over the pulleys π_1, π_2, and π_3, and thus raise the floor at twice the velocity at which the piston moves.

The weight of the floor being 12 tons, the tension on each of the three suspending ropes will be 4 tons. The counterpoises weigh 3½ tons each, therefore there will be an outstanding tension of half a ton on each of the thinner wire ropes, which is amply sufficient to cause the piston to return when the escape-valve of the hydraulic ram is opened.

The water supply to the ram, at a pressure of 500 lbs. to the square inch, is given by the hydraulic accumulator E, of which a description is subsequently given at p. 12.

Water is pumped into the cylinder of the hydraulic accumulator by the 3-cylinder force-pump F (which is subsequently described), actuated by the electro-motor G; the latter is connected through the automatic switch S with an accumulator battery of 27 cells contained in an adjoining building.

The reader will gather from Plates I. and II. that all the hydraulic machinery is mounted below the level of the floor, excepting the electro-motor and force-pump which stand in the entrance-hall.

H (Plate II.) is the tank from which the water is pumped through the pipes 1 and 3, and into which the escape water returns through the pipe 2.

K is a valve which at the observer's pleasure either admits water from the cylinder to the ram through pipe 4, or allows water to escape from the ram through pipe 4, and thence through pipe 2 to the tank H.

Water is supplied to the ram which winds the clock through pipe 5, and escapes to H through pipes 6 and 2.

M is a water-motor, subsequently described, which turns the dome, and L the valves which connect it with the hydraulic accumulator and enable the motor to be started in either direction or stopped at the astronomer's pleasure.

The steps N give access to the landing O, and thence through the door P (Plate I.) by the descending steps Q (Plate II.) to the solid floor of the foundation on which the base of the hydraulic accumulator rests. The iron frame of the hydraulic accumulator is 27½ feet in height; it projects through the floor and reaches the ceiling of the minor entrance-hall.

The automatic switch S for starting and stopping the electro-motor, which was originally mounted in the lower chamber of the hydraulic accumulator, has been removed to the corresponding position in the upper half of that chamber, which forms the minor entrance-hall. Its object is to automatically start the motor when the piston of the hydraulic accumulator has fallen through half of its stroke, and to stop the motor when the weights of the hydraulic accumulator are raised to their highest point. The current is admitted, at starting, first to the field

Digitized by Google

magnets only through a series of diminishing resistances, then to the armature through continually diminishing resistances, till all resistance is cut out. In stopping, the reverse takes place. The switch is actuated by a small hydraulic ram, the valves of which are worked by a sliding rod on the frame of the hydraulic accumulator.

The motor takes a current of 30 amperes at 50 volts, and raises the piston of the hydraulic accumulator at the rate of about 1 foot per minute.

One full stroke of the hydraulic accumulator will raise the floor twice from its lowest to its highest point.

The floor and the hydraulic gear were designed by Mr Osbert Chadwick, C.M.G., C.E., M.I.M.E., and made by the Glenfield Company, Kilmarnock.

The whole arrangement works with the utmost smoothness and perfection, and has given no trouble.

The floor can be raised 9 feet in 20 seconds, or it can be raised as slowly as desired and stopped within one-fiftieth of an inch at any required height. Besides the immense convenience of giving comfortable access to the eye-end of the telescope, the rising floor was employed with great advantage in mounting the instrument, and it provides an easy means of attaching or detaching the spectroscope, etc.

The building was designed by Mr Herbert Baker, architect, of Cape Town, in consultation with H.M. Astronomer. The original design did not include the Laboratory, which was subsequently added.

The general plan of the building can be sufficiently gathered from inspection of Plates I., II., III. (view looking from N.W.), and IV. (view from the N.E.).

The dome, of 36 feet internal diameter, was constructed by T. Cooke & Sons, of York. The framework is of angle steel, and is covered with sheets of papier mâché. The circular cast-iron girder, to which the steel uprights are attached, carries the wheels on which the dome revolves. The toothed rack by which the dome is rotated is formed in the casting of the girder. The wheels run upon a circular planed cast-iron rail, which is bolted to the stone coping of the wall; this rail was most carefully centred and levelled by a training rod from a shouldered pin fixed on a temporary central pillar of brickwork that was built for this purpose. The accompanying figure gives a section through the girder and rail.

Fig. I

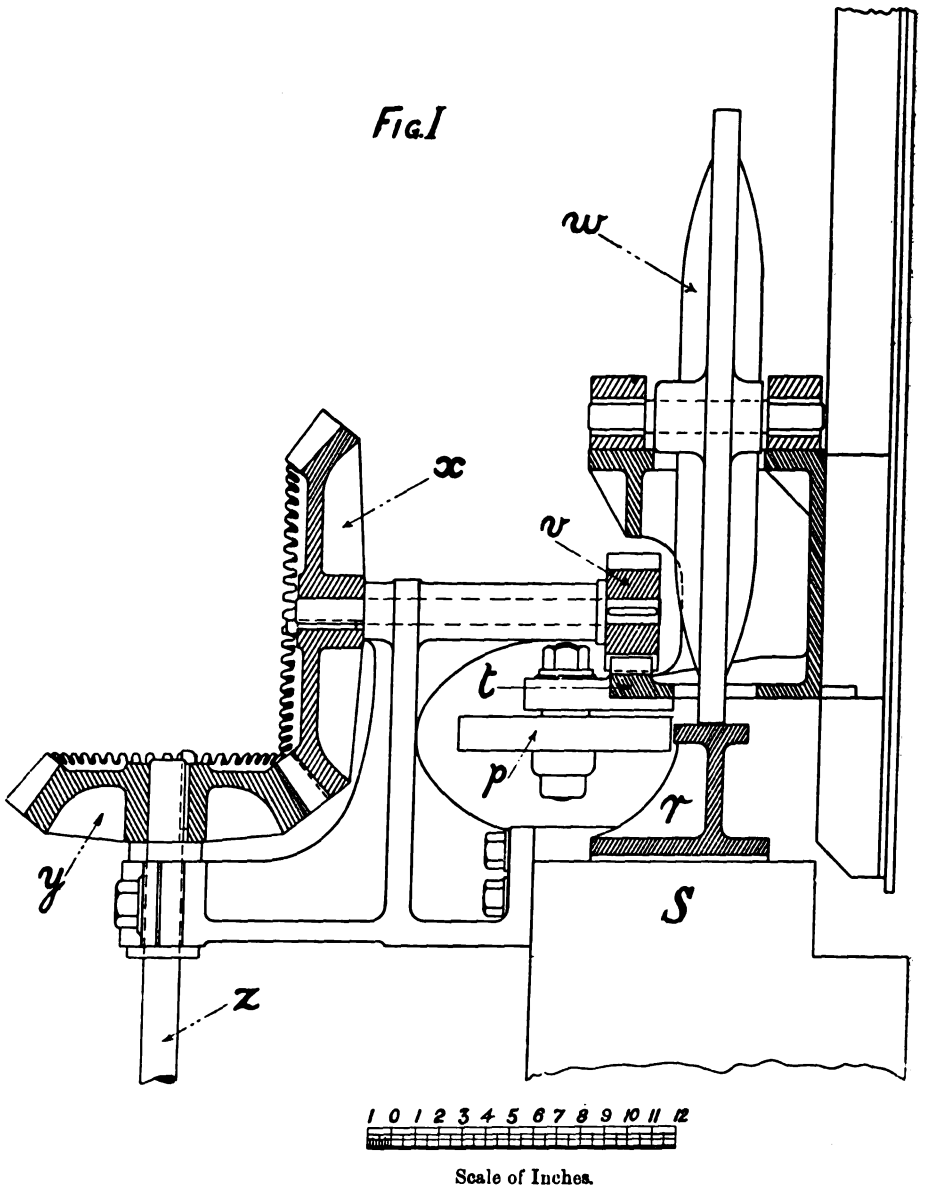

Scale of Inches.

r is the rail; S the stone coping of the wall; w one of the wheels mounted on the girder; t the toothed rack cast on the girder; p one of the wheels mounted on the girder that preserves the centring of the dome; v a toothed wheel gearing in the rack; x a bevel wheel on the axis of v; y another bevel wheel connected by the spindle z with the hydraulic motor which rotates the dome.

The opening of the dome is covered by two shutters of the form shown in Plate III.

These shutters do not touch the dome at any point except where they pivot at V (Plates I. and IV.), or where they run on circular rails (whose centre is V), as shown in Plates III. and IV. The shutters open and shut with great ease, and, having adequate overlap, effectually exclude rain. They are opened or closed simply by ropes passing directly over pulleys; the ropes hang down alongside the wall, are always accessible and never in the way.

One of the ropes, ψ (Plate I.), acts on a catch which fastens each shutter after it has been closed; the other rope unfastens it.

Digitized by Google

The workmanship of the dome is most excellent, and with the hydraulic machinery it works to perfection at any velocity up to 1 revolution per minute.

The design, however, is faulty if the greatest ease of motion by hand is desired. For that purpose a live ring would be preferable, or the bearing surfaces of the wheels should be portions of a cone of which the centre of the observatory is the apex, and the axes of the wheels should correspond in position with the axis of such a cone when laid upon a horizontal surface, thus :—

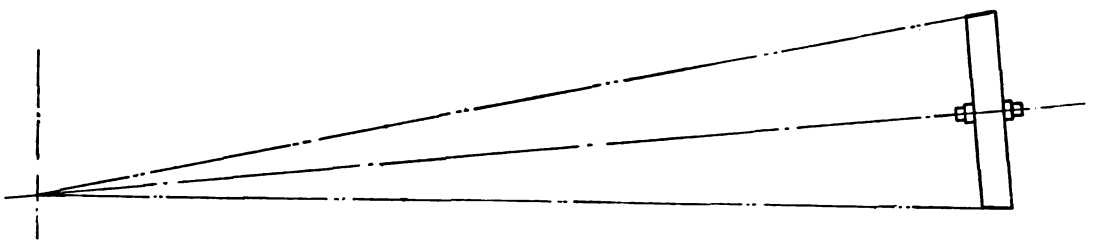

Fig. 2.

When the axes of the wheels are horizontal, as in the present case, the tendency of each wheel is to run as a tangent to the circular rail, whereas conical wheels, properly made and mounted, run on the circular rail without side-slip, and thus much friction is saved. With such cone wheels, however, the outer pivot should bear on an end-bearing and not on a shoulder.

The Instrument-room contains the switch-boards connected with the thermostat of the spectroscope, and a bench fitted with a Wheatstone-bridge, resistance-box, and galvanometer, for the ready determination of resistances. This room also serves to contain the spectroscope on its stand when that instrument is not in use.

In the Laboratory, *h* (Plate II.) is a fume-cupboard, with ventilating appliances; *k* is a sink; *mm* are slate tables resting on brick piers standing on foundations which are insulated from the walls and floor of the building; *n n*, etc., are six cupboards with glass shelving for the storage of chemicals and apparatus; *o* a wooden panel designed to admit sunlight from a heliostat which it is hoped will ultimately be mounted. The windows of the Laboratory are fitted with balanced sliding shutters which, when closed, convert the whole room into a perfectly dark chamber.

THE TELESCOPE.

The general plan of the telescope will be gathered from Plate I.

Plate V. shows the telescope as finally erected, equipped for astrographic work.

The floor is shown raised up as far as the top of the lower casting B (Plate I.). The heavy lead counterpoises, shown at 1 near the dark slide (Plate V.), are removed when the spectroscope is attached as in Plate I. The struts 2 and 3 formed no part of the original design, and are not shown in Plate I. The projections 4 and 5 are hollow cast-iron boxes, attached to the pier, which were made at the Cape to prevent possible injury to the extremities of the driving arc which projects to the west when the sector is fully run back, or to the east when nearly run out. Electric contacts are provided which cause a bell to ring when the sector is near its working extremity at either end.

The curved casting in front of the pier, in which the holes 6 and 7 are shown, was also cast and fitted at the Cape, as well as a strong cast-iron piece to fill up the large opening at the back of the pier, as shown in Plate VI. (from a photograph taken in course of the erection of the instrument). Both these castings were necessary as stays to stiffen this pier.

The only photograph which we have that illustrates the instrument before the alterations in question were made is given in Plate VII. This conveys the impression of weakness and liability to "twisting spring" in the pier, and careful tests showed that any motion given by hand to the eye-end did produce such a motion when a "noddy"* was applied to the pier. The coverings of the open front and back of the pier (which were bolted and steady-pinned to the flanges), of course, greatly stiffened it.

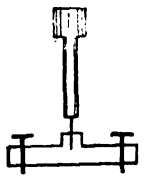

Fig. 3.

But another element of weakness remained. The long side of the casting DC (Plate I.) was not sufficiently ribbed internally, and an internal flanged web of cast-iron was made at the Cape, extending from X nearly to Y. This had to be made in two pieces, and its construction can be gathered from fig. 9.

Bolts and push screws made this diaphragm practically as efficient as if it had been cast *in situ*, and rendered the whole of the lower part of the stand quite rigid.

* A "noddy" is a pendulum with the bob upwards provided with a sufficiently stiff spring to preserve the pendulum in a vertical position (fig. 3). The slightest movement of the base in the direction of the plane of vibration causes such a pendulum to vibrate.

Digitized by Google

Digitized by Google

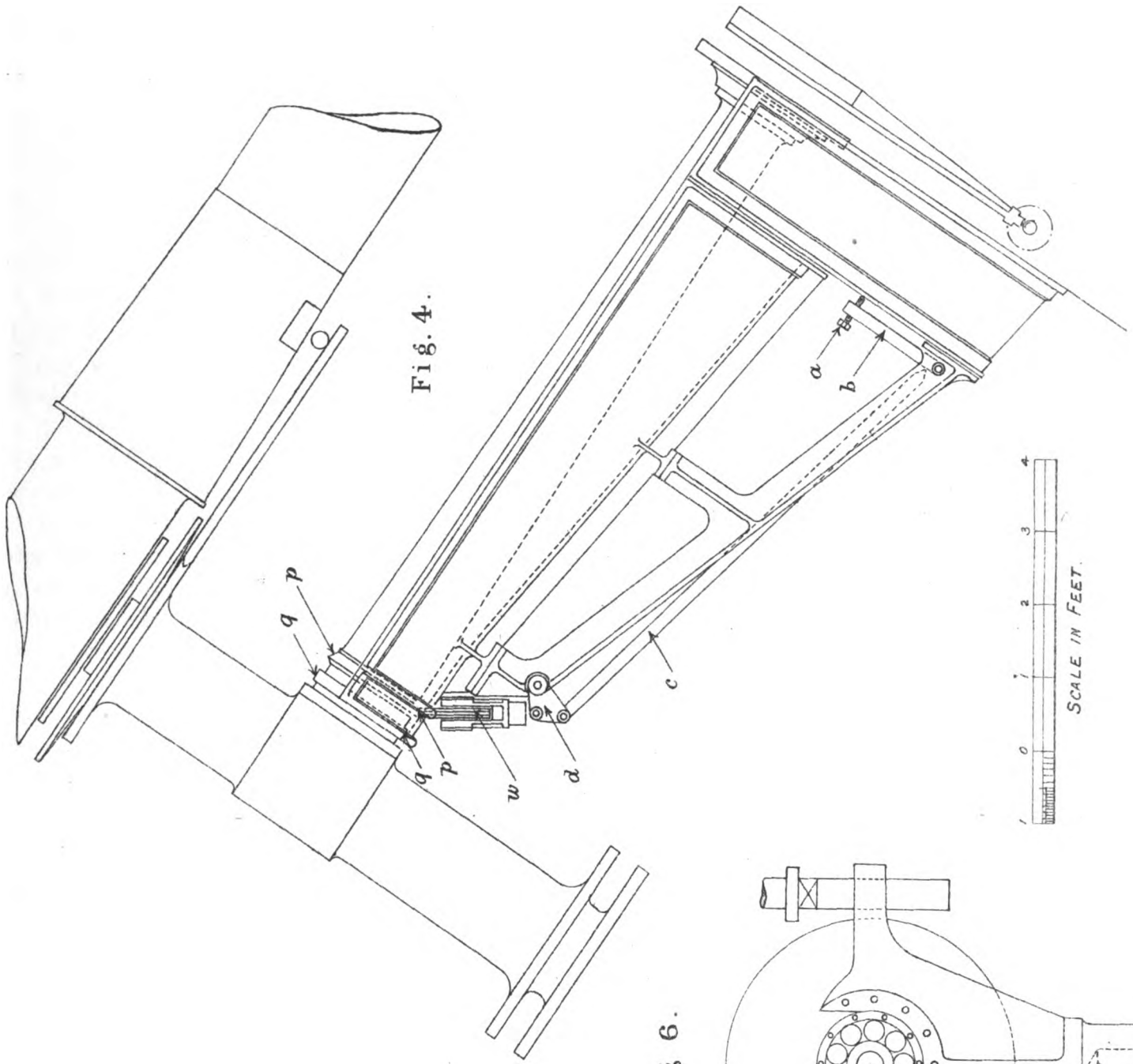

Fig. 4.

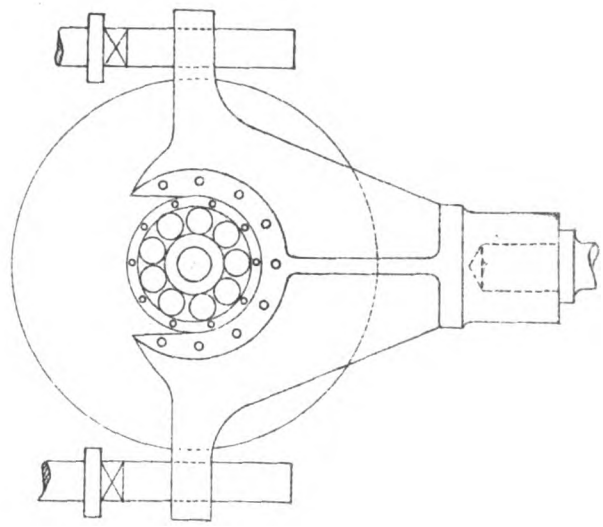

Fig 6.

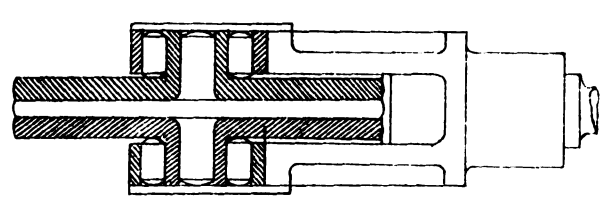

Fig. 5.

Digitized by Google

The overhanging support of the Polar Axis remained an element of instability. We were therefore very unwillingly compelled to sacrifice the complete circumpolar motion in photographic work for stars up to Decl. −60°, which the construction of the instrument provided, and to insert the strong solid-drawn tubular steel struts, 3½ inches in diameter, shown at 2 and 3 in Plate V. These effectually rendered the whole structure rigid; indeed, I know of no large equatorial more satisfactory in this respect than the Victoria Telescope now is.

The smaller hole 6 in the curved face plate (Plate V.) serves to give access to the sliding piece which has to be unclamped in winding back the sector. The larger hole 7 is a "man-hole" which gives access to the interior of the pier.

The general plan of the Polar and Declination Axes and the arrangements for relief-friction do not differ materially from their construction in other well-known examples of Grubb's large equatorials.

For relief-friction of the Polar Axis the principle originally invented by Repsolds as described in the *Encyclopædia Britannica*, vol. xxiii., p. 151, has been adopted, but with some modification in detail.

This plan consists in balancing the moving parts of the equatorial in unstable equilibrium upon a conical bearing near the upper end of the Polar Axis.

That is to say, if *p p*, fig. 4, is part of the surface of a cone whose axis is coincident with that of the Polar Axis, and whose angle at the apex is twice that of the latitude, and if *w* is a wheel pressing vertically upwards on *p p*, and O a point vertically over the centre of the axis of *w*. If now we adjust the weights of all the moving parts of the instrument so that O becomes their centre of gravity (which can easily be done by an adjustable weight in the interior of the Polar Axis), then we can simultaneously relieve the pressure of the pivot *q q* on its bearings and that of the axis on its lower bearings to any extent that may be desired, simply by increasing the vertical upward pressure on *w*.

In the Pulkowa Telescope, and subsequently in our Astrographic Telescope, the surface *p p* was hollowed out and that of *w* rounded to correspond. Sir H. Grubb feared that, in consequence of the great weight of our telescope, a broader bearing surface would be required, but that the introduction of the broad rolling surface of a cylinder like *w* upon a cone *p p* would certainly lead to a tearing of the surface because of the unequal linear velocity of different parts of the conical bearing surface and the equal velocity of motion of all parts of the bearing cylindrical surface. He therefore divided the wheel *w* into three parts, mounted as shown in figs. 5 and 6, the edges of the three wheels being slightly rounded.

The screw *a* and the levers *b*, *c*, *d* afford the obvious means of regulating the upward pressure of *w* upon *p*.

The whole has worked very well, except that the surface of the pivot of one of the outer wheels had to be re-ground and a new set of cylindrical rollers made at the Cape. The motion both in Right Ascension and Declination is very easy, having regard to the great weight of the instrument and the large size of the pivots employed—the diameter of the upper pivot of the Polar Axis being 17 inches and that of the Declination Axis 12 inches.

THE TUBES.

The construction of the tubes of the three telescopes may require special description. Plate VIII., from a photograph taken in course of erection, shows the double-tubed cast-iron central piece on the point of being hoisted into position for bolting to the head of the Declination Axis. To the flanges of this casting the remaining parts of the 24-inch and 18-inch tubes are attached.

The 24-inch tube is shown in section in the following figure, 7, and is of great strength.

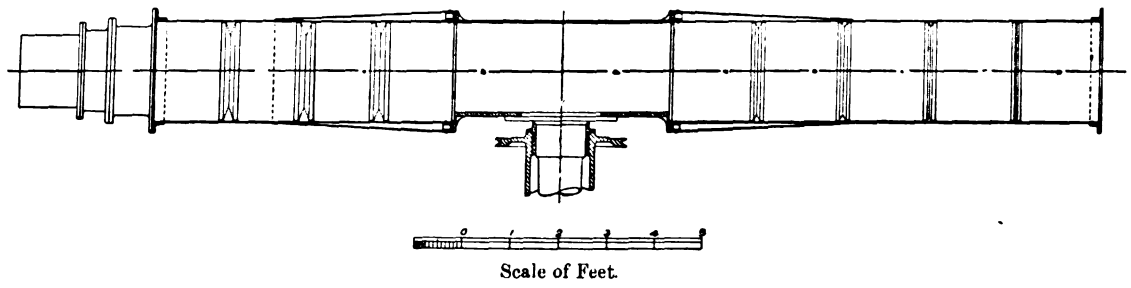

Scale of Feet.

Fig. 7.

The tube of the 18-inch object-glass is cylindrical, and made of riveted steel plate, also very stiff and strong.

These tubes at their outer extremities are attached to single iron castings, one of which carries the three object-glasses, the other the three eye-ends.

Digitized by Google

The form of the casting at the objective end is well shown in Plate X., as also the mounting of the Grubb 24-inch objective prism. The prism is shown folded back (out of use). This folding back is very easily accomplished by a key applied to the squared arbour at *a*, which carries two pinions that act on the racked rods *b* and *c*. The disc *d*, covering the centre of the 24-inch object-glass, happened to be applied for testing the aberration of the objective at the time when the photograph was taken, and is, of course, removed in ordinary use.

The "eye-ends" of the tubes are also bolted to a similarly shaped casting, as will be seen from other plates of the instrument which have been, or will subsequently be, described.

The tube of the 8-inch telescope is made of light sheet-iron, and is supported near the centre of its length by brackets attached to the flanges of the central casting.

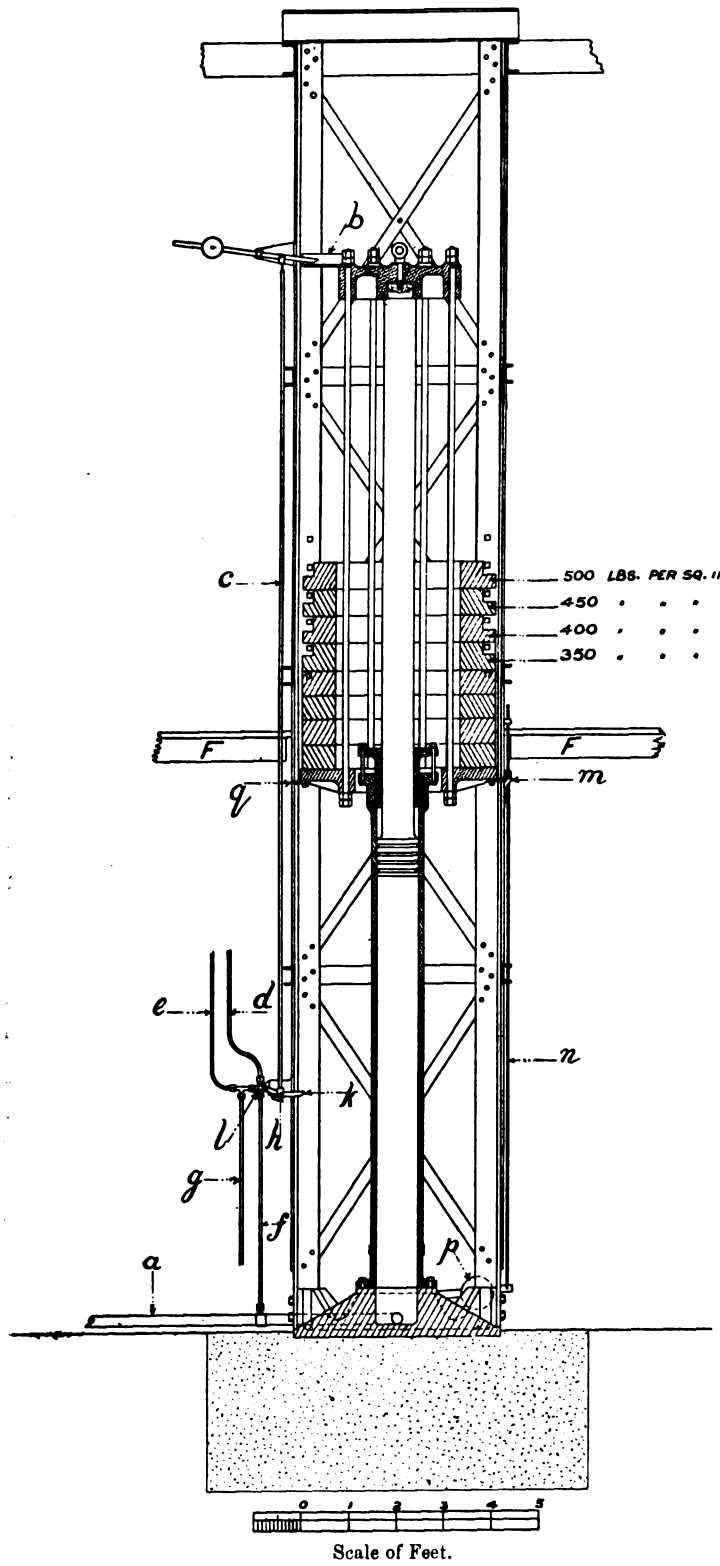

FIG. 8.

THE HYDRAULIC APPLIANCES.

The pump which forces water into the hydraulic accumulator, already mentioned at p. 8, is shown in Plate IX., and its construction will be evident from inspection.

The electro-motor which actuates the pump is of two-horse power, taking in practice a current of 30 amperes at 50 volts. Motion is communicated to the pump by an india-rubber cylinder (mounted on the spindle of the armature) which, by friction on the broad cylindrical surface of the fly-wheel, communicates a noiseless and easy motion to the axis of the excentrics which work the triple-cylinder pump.

The pump and motor stand on the tiled floor of the principal entrance-hall in the position shown in Plate II. The course of the pipes connected with the pump has already been described in connection with Plate II.

The Hydraulic Accumulator.

Fig. 8 represents the hydraulic accumulator. It stands on a solid foundation in the chamber underneath the smaller entrance-hall, passing through the floor above (shown at F) and reaching the ceiling.

The piston is shown at the top of its stroke. Water is forced into the cylinder from the pump through the pipe *a*; the same pipe acts also for delivery to the ram through the valve K as shown in Plate II. The piston is 8 inches in diameter, has a stroke of 10 feet, and is loaded with eight square cast-iron weights which together give a water pressure of 500 lbs. per square inch. The cylinder has been tested to 2000 lbs. per square inch.

The guide-frame is of $\frac{3}{4}$-inch thick angle-iron braced in the manner shown. The pressure can be reduced to 450, 400, or 350 lbs. per square inch by thrusting bars provided for the purpose through the square holes shown in the frame, and so preventing the fall of one, two, or three of the upper weights. In practice all the weights are used.

When the piston reaches the upper point of its stroke the arm *b* draws up the rod *c*, which, acting on the valve *h*, connects the pipe *d* with *f*, and *e* with the exhaust *g*. This causes the automatic switch S to stop the electro-motor of the pump as described at p. 8. Should the switch fail, the catch *m* draws up the rod *n* which

Digitized by Google

Digitized by Google

Fig. 9.

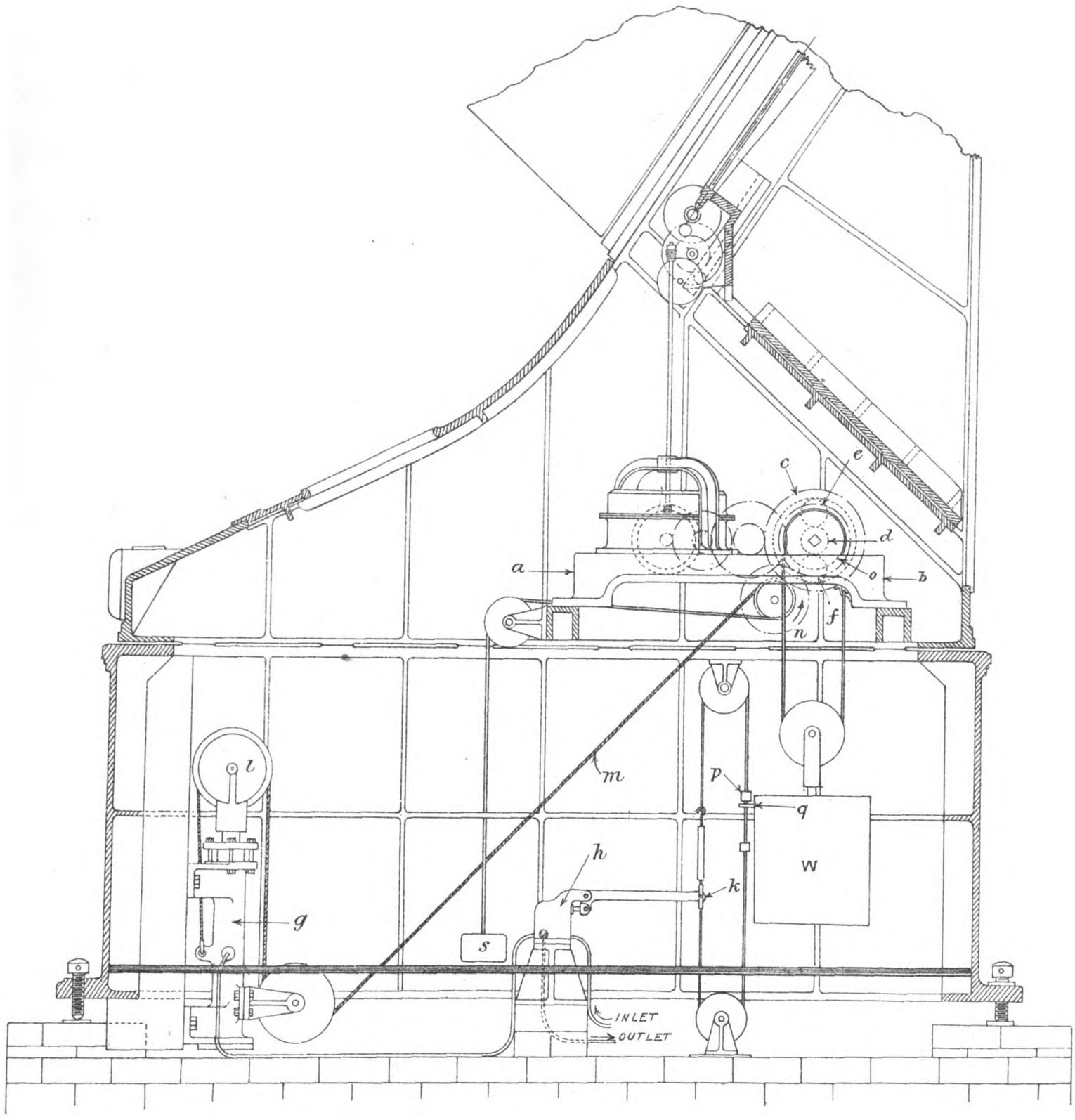

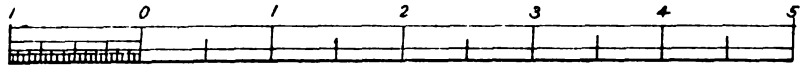

SCALE OF FEET

Weller & Graham, Ltd Litho. London.

Digitized by Google

raises the safety-valve *p*. When through use of the rams or water-motor the piston falls below half-stroke, the catch *q* encounters the arm *k* of the valve; this opens the pipe *f* to *e* and puts the pipe *g* to the exhaust, and causes the automatic switch to start the motor (as described at p. 9), because the pipes *d* and *e* are connected with a small double-acting hydraulic ram on the automatic switch S. As such switches are matters of commerce, S need not be further described.

As one half-stroke of the hydraulic accumulator-piston will raise the floor from its lowest to its highest point, there is never any want of available power.

The methods of working the rising floor are fully described in connection with Plate II. (pp. 8 and 9).

MACHINERY FOR ROTATING THE DOME (Plate XI.).

The machinery for rotating the dome, under the rising floor, is shown at M in Plate II. The details of its construction may be gathered from Plate XI., which is from a photograph of the apparatus taken *in situ*.

a is a three-cylinder hydraulic engine, having pistons of $1\frac{3}{4}$ inches diameter and $2\frac{1}{2}$-inch stroke. It is run by water from the hydraulic accumulator at any speed from 30 to 200 revolutions per minute, according as the valves are partially or fully opened.

The valves (shown on the left hand of Plate XI.) are operated by the square axis *b*, passing through the rising floor, and can be conveniently turned by the observer in any position of the floor. Rotation of the axis *b* starts the engine *a*, causing the axis *c d* to rotate, and, with that axis, also the conical friction-clutches *e* and *f*. The bevel wheels *g* and *h* are fitted loose on the axis *c d*, and the cones *e* and *f* slide on the axis, but are made to rotate with the axis by a "feather" or guide attached to the axis.

Underneath the axis is a small hydraulic ram that operates the clutch-levers, which are jointed at *m* and *n*. When the axis *b* is turned to the right, the valve connects the hydraulic accumulator with the left-hand end of the small hydraulic ram and the right-hand end of the ram with the exhaust, so that the friction-clutch *f* is forced into the bevel wheel *h*, which then rotates so that the spindle *z* turns, let us say, in the direction of the hands of a watch. But if the axis *b* is turned to the left, the piston of the small hydraulic ram is moved to the left, the clutch-cone *f* is withdrawn from the bevel wheel *h*, the clutch-cone *e* is thrust into the bevel wheel *g*, and the spindle *z* is turned in the opposite direction to that of the hands of a watch.

The spindle *z* in Plate XI. is the same spindle that is marked *z* in fig. 1, whence it will be seen how the dome may be rotated in either direction.

This apparatus has worked exceedingly well; in fact, it has never failed. But it is necessary to re-grind the face and bearing of the rotatory valve from time to time to prevent waste of water power in working.

Fig. 9 illustrates the connection of the clock governor of the driving clock with the "sun and planet" gear and the driving screw, which are all arranged on Grubb's well-known plans and need not be further described.

MACHINERY FOR WINDING THE CLOCK (Fig. 9).

Fig. 9 shows the lower part of the equatorial stand which contains the driving clock and the hydraulic arrangements for its automatic winding.

a b is the iron casting on the planed upper surface of which the bearings of the train of clock-wheels are mounted. *c* is the first wheel of the train, turning freely on the same axis as that which carries the winding barrel. The barrel on which the cord of the weight is wound is also free to revolve on the axis. The wheel *d* is attached to the axis, the wheels *e* and *f* are mounted on studs which are fixed on the end of the barrel. The wheels *e* and *f* gear both into the wheel *d* and also into pins which form an interior lantern gear in the wheel *c*. When the axis of *d* is turned by a winding key the wheels *e* and *f* are compelled to rotate. But as *e* and *f* also gear on the inner pin teeth of the fixed wheel *c*, they can only rotate when their centres travel round the axis of *d* as "planet wheels" in the same direction as the winding axis. As the studs which carry *e* and *f* are attached to the end of the barrel, they compel the barrel to turn and so wind up the weight.

It is obvious that in so doing the pressure of the teeth of the wheel *c* upon the first pinion of the train will remain the same whether the clock is being wound up or not. The arrangement therefore constitutes a perfect "maintaining power," and we may either wind the clock continuously and slowly, or rapidly and at intervals. When it became evident that hand-winding was impracticable, an electro-motor, running nearly continuously and acting

Digitized by Google

through screw and worm-wheel gearing was thought of. But when hydraulic arrangements were planned for raising the floor, it became evident that hydraulic power presented a less troublesome and more certain method of doing the work.

g is a small hydraulic ram connected by a copper pipe with the valve *h*.

When the end *k* of the arm of the valve is raised, the inlet pipe (connected with the hydraulic accumulator) is put in connection with the ram *g*, and the pulley *l* at the end of the plunger is forced upwards, pulling the rope *m*. This rope is wound upon a barrel, which, by a ratchet and pawl, causes the wheel *n* to turn in the direction of the arrow-head when *m* is pulled. This wheel *n* gears into the wheel *o*, which is fixed upon the winding axis of the clock, and so the driving weight *w* is raised, as well as the small weight *s*.

When the catch *q* encounters the block *p*, the latter is raised, the end of the valve-arm *k* is forced downwards, and the water in the ram *g* is connected with the exhaust. The weight of the plunger and pulley, together with that of the weight of *s*, are now sufficient to force back the plunger of the ram to the bottom of its stroke.

The clock thus winds itself up every four minutes without communicating the slightest vibration to the telescope; care has therefore only to be taken to stop the clock when the driving arc is "run out"—of which, as already mentioned (at p. 10) timely warning is given by an electric bell.

THE CLOCK-WORK AND SLOW MOTIONS.

The clock-work is of Sir Howard Grubb's usual design, as described by him in the *Monthly Notices, R.A.S.*, vol. xlviii. p. 352, and it is controlled by means of instantaneous galvanic currents given by a platinum point, at the end of a seconds pendulum, which cuts through a globule of mercury at the middle point of the swing of the pendulum. These instantaneous currents are diverted by means of a revolving triple wheel, or detector, to one of three "wipers" which form contacts with teeth cut on the wheels of the detector. During 98% of one second, spring 1 is in contact with one tooth of one wheel, spring 2 comes then instantaneously into contact with a sharp-pointed tooth of wheel 2, and then, during 98% of the following second, spring 3 comes into contact with a tooth on wheel 3.

The instantaneous current will therefore pass through spring 1 if the driving clock is fast, through spring 2 if the pendulum and driving clock are in coincidence, and through spring 3 if the driving clock is too slow.

The three springs are connected with three magnets of a relay or distributor on the plan first described in *Monthly Notices, R.A.S.*, vol. xxiv. p. 34, and in a slightly modified form in Sir Howard Grubb's paper above quoted. This relay, if the instantaneous current comes from spring 1, excites a retarding magnet for nearly one second; if through spring 2, it interrupts any current that may have been previously exciting either the retarding or the accelerating magnet; if through spring 3, it excites the accelerating magnet.

In the first clocks made on this system of control the accelerating and retarding magnets acted on the rate of the governor by increasing or diminishing friction; but by the far more elegant contrivance of Grubb's "sun and planet" differential gear the rate of the governor is not affected, but merely interposed differential gear accelerates or retards the rate of the driving screw without affecting the rate of the clock itself.

A figured description of this differential gear will be found in the present volume in connection with the regulator-motor of the Cone Apparatus which is attached to the Reversible Transit Circle.

In one detail only does the clock-work and control of the Victoria Telescope differ from that described and figured by Sir Howard Grubb in the paper above quoted, viz. in the form of the wipers of the detector.

In the Astrographic Telescope and the Grubb Chronograph, which have been in use for a good many years at the Cape, we found that the teeth of the detector became gradually destroyed in accuracy by wear from sparking. We also found it extremely undesirable, when accumulator batteries are used, to employ the body of an instrument as "an earth," for thereby undesirable faults in the system are apt to be introduced, by putting the charging dynamo to earth, and so on. I therefore suggested to Sir Howard Grubb that, instead of employing his simple wipers, double springs should be employed as in fig. 10. These springs should be insulated from the body of the instrument and from each other, and the tip *t* of the lower spring should be of agate. When the agate tip is raised by the wheel, contact is made between the platinum anvil on spring *b* and the rounded platinum point on spring *a*. This system has worked to perfection, and the teeth of the detector show no sign of wear.

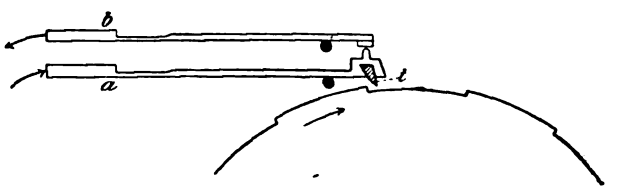

FIG. 10.

Digitized by Google

The slow motion is given by the independent "sun and planet" gear, acted upon by a double key held in the hand in the manner described by Sir Howard Grubb.

Grubb's "quick-slow motion" is also a most convenient addition. It provides, after the driving arc has been clamped to the Polar axis (*i.e.* to the clock motion), the means of moving the image of a star in the field of view at about the same rate as the diurnal motion. This is a great convenience for rapidly bringing the image on the micrometer wire or the spectroscope-slit.

This "quick-slow motion" is given by rotating one disc of the differential gear rapidly in either direction by means of a small motor, the motion of the motor being controlled by a suitable key either held in the observer's hand or suspended from the eye-end.

ILLUMINATION, ETC.

In an adjoining accumulator-house there is a battery of 30 Epstein accumulator cells of 400 ampere hours' capacity which is devoted exclusively to the service of the Victoria Observatory.

The following separate circuits are led from this battery :—

a. 50 volts for the electro-motor that drives the pump of the hydraulic accumulator.

b. 50 volts for lighting the laboratory, offices, and the observatory itself, as well as the lamps in the interior of the telescope, and underneath the rising floor for examining the working of the different parts of the machinery.

c. 50 volts for maintaining uniform temperature in the interior of the spectroscope.

d. 4 volts for the thermostat of the spectroscope.

e. 6 volts for illumination of the circles of the instrument, the scales of the guiding telescope, the field of view of the finder, the 8-inch and the 18-inch telescopes.

f. 8 volts for the clock control and slow motion.

g. 22 volts for supply of current to the large induction coil.

The illumination of each separate part of the instrument is controlled by a separate switch and provided with a carbon cloth rheostat. The whole of the arrangements for illumination have been re-made at the Cape, and are now most complete and satisfactory.

Digitized by Google

Digitized by Google

Digitized by Google

THE VICTORIA OBSERVATORY.

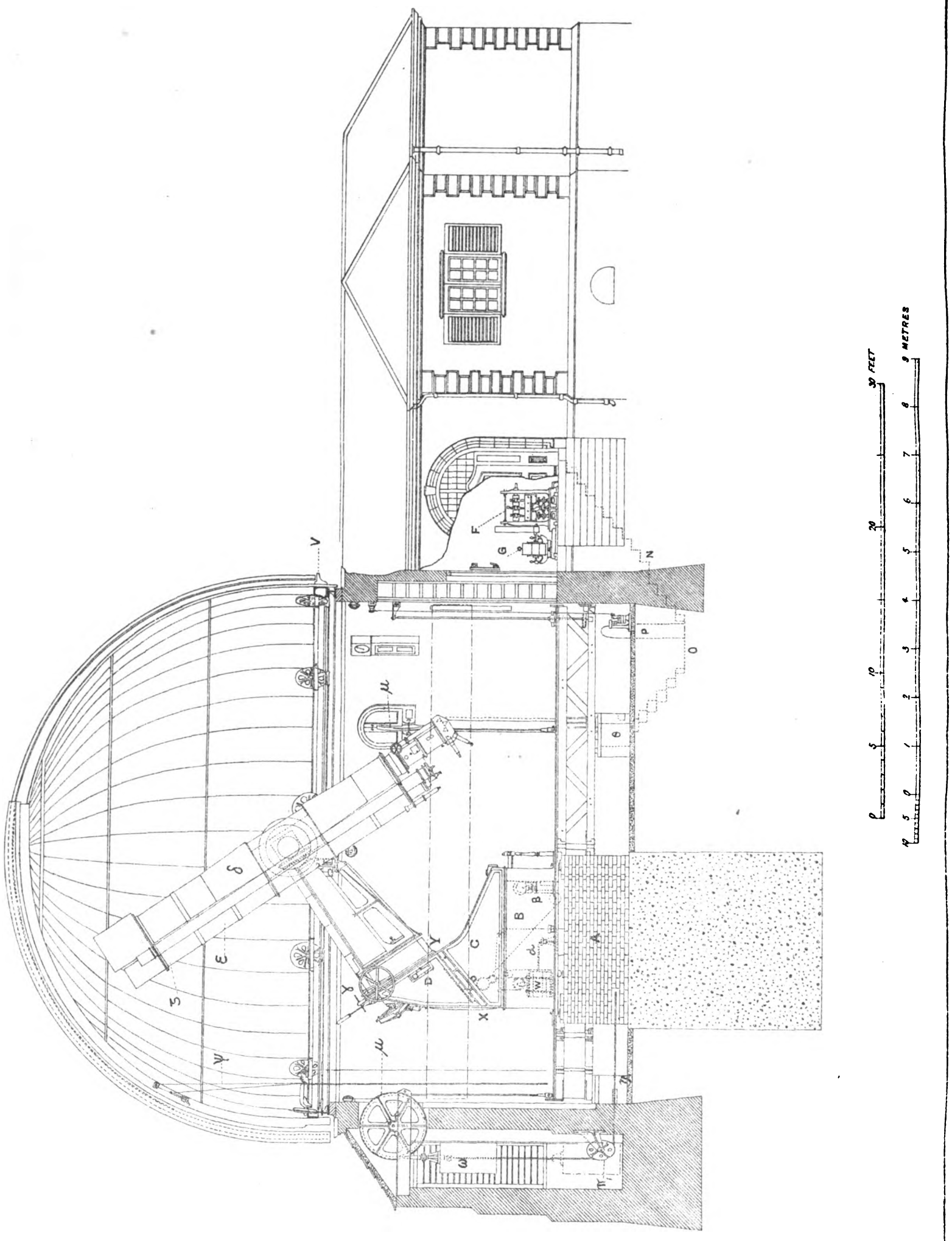

To face Plate II at end of Part I, following page 16.

Weller & Graham, Ltd. Lith. London

Digitized by Google

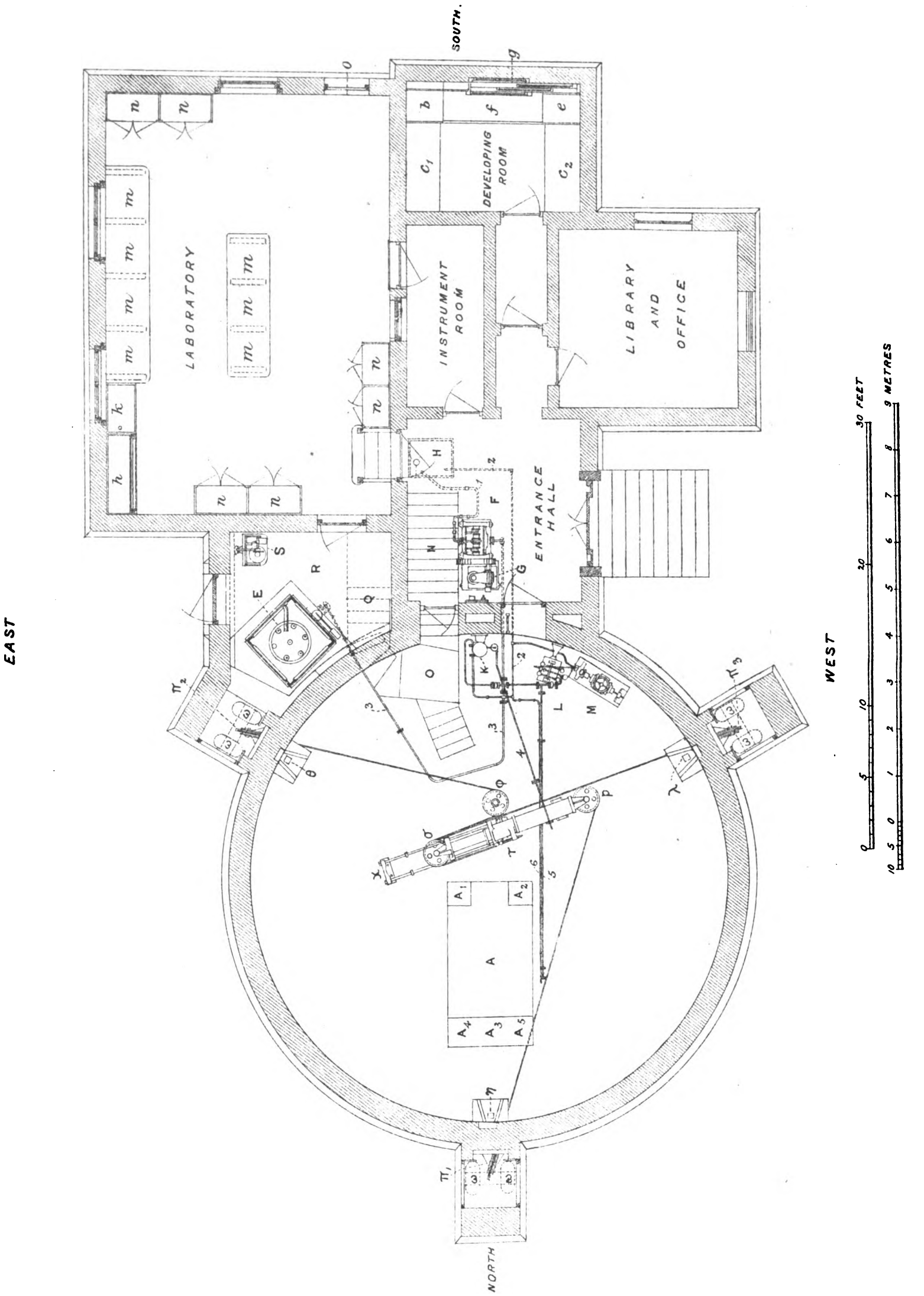

To face Plate I. at end of Part I.

Wellcome Graham Ltd Litho London.

Digitized by Google

Digitized by Google

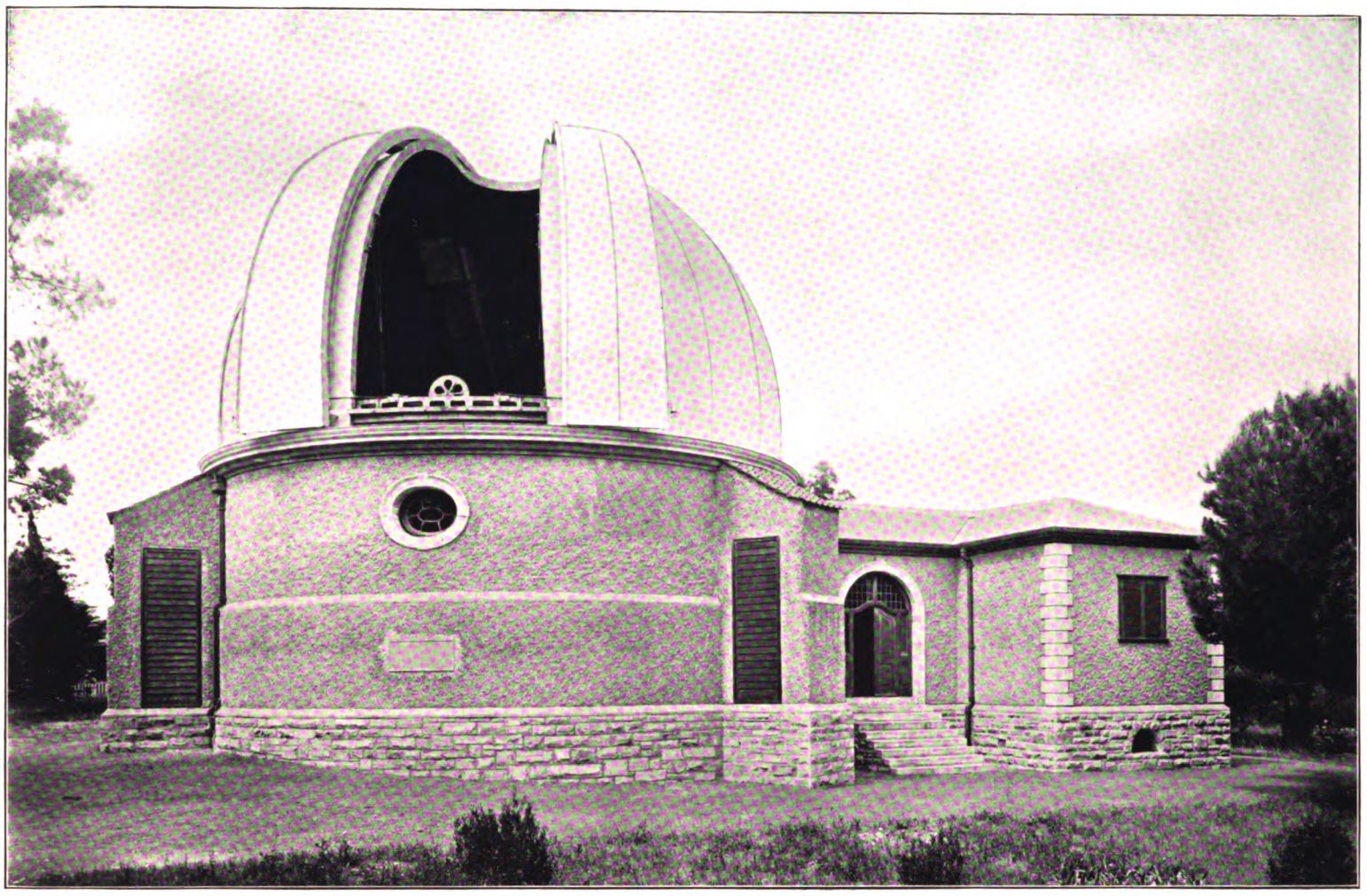

PLATE III.

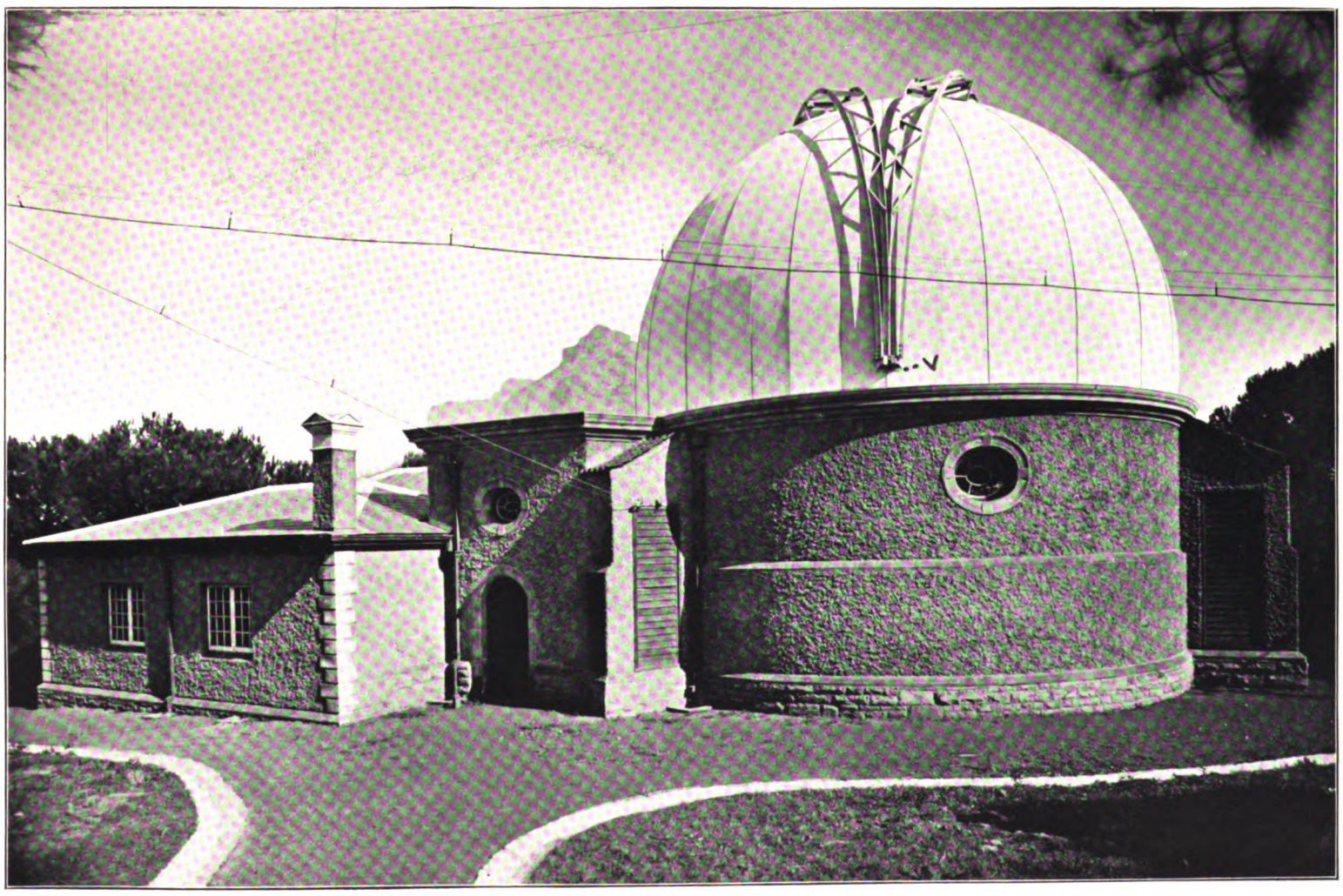

PLATE IV.

Digitized by Google

Digitized by Google

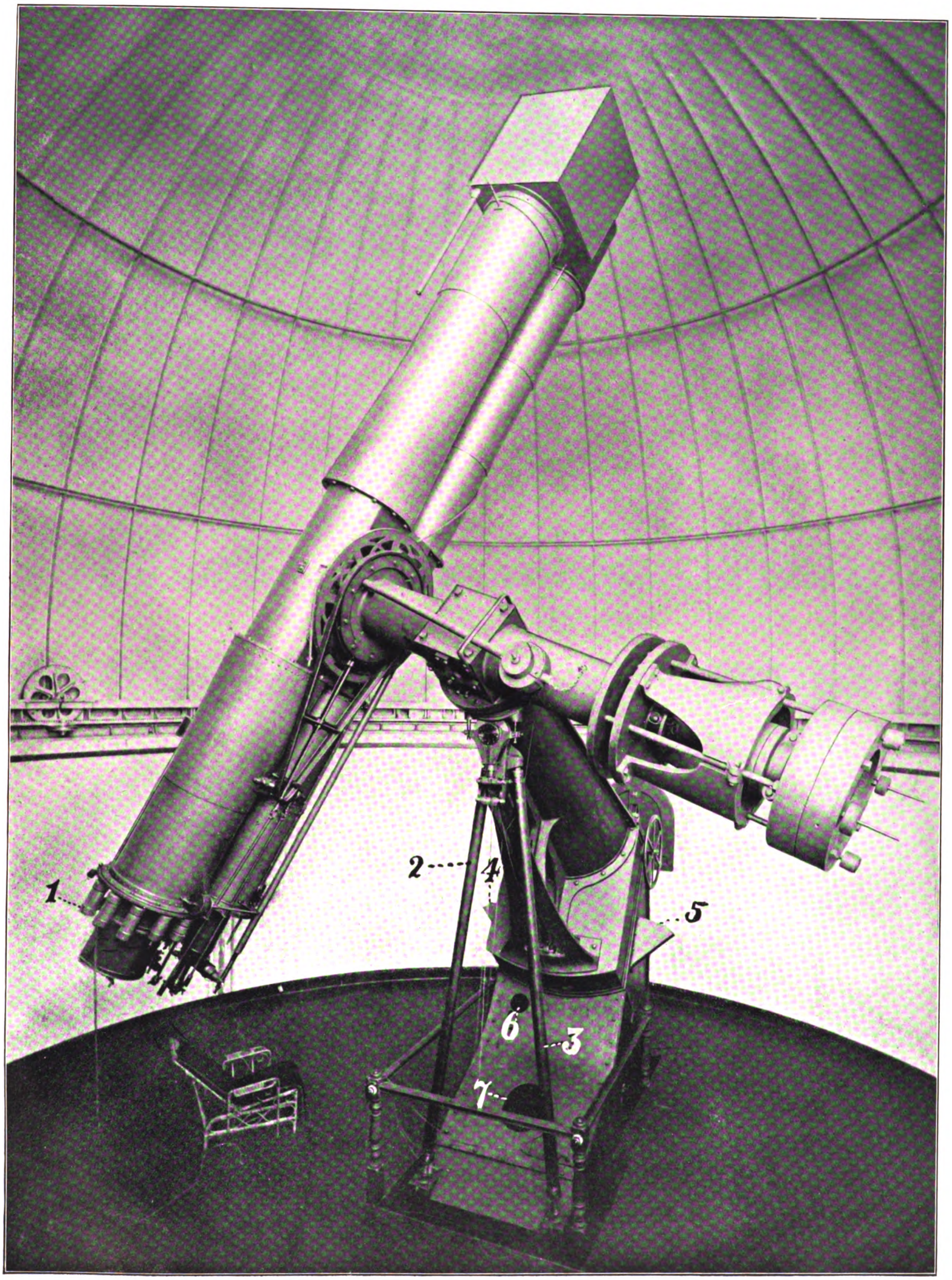

PLATE V.

Digitized by Google

Digitized by Google

PLATE VI.

PLATE VII.

PLATE VIII.

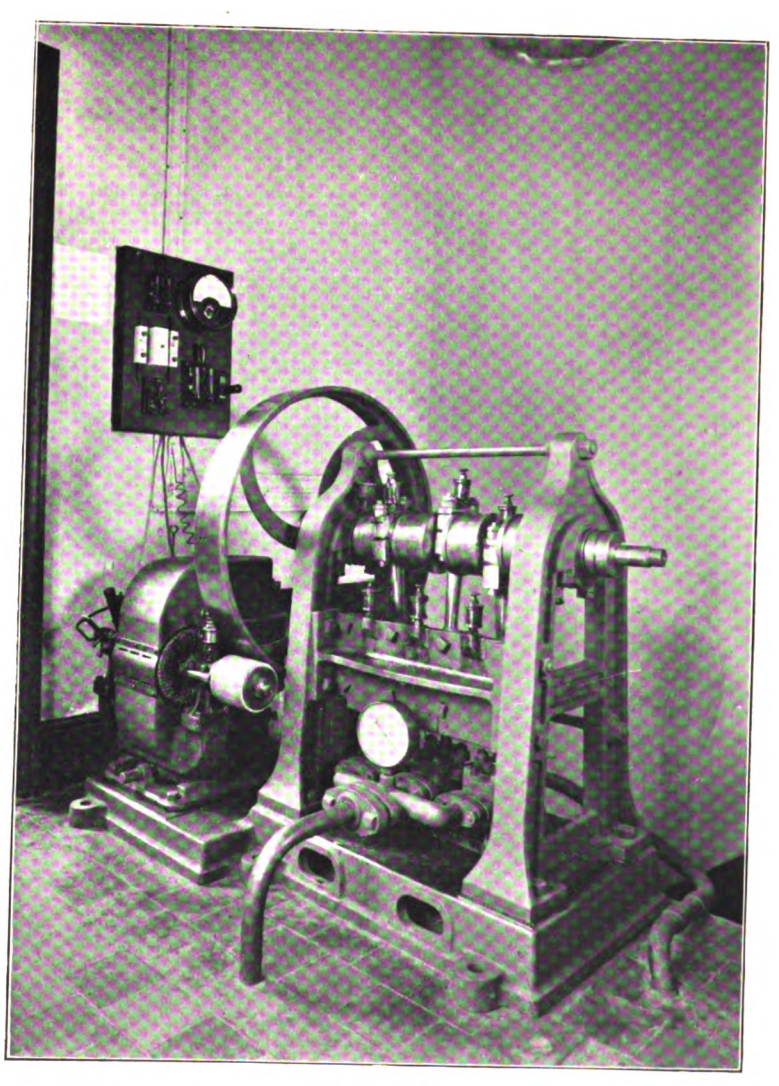

PLATE IX.

Digitized by Google

Digitized by Google

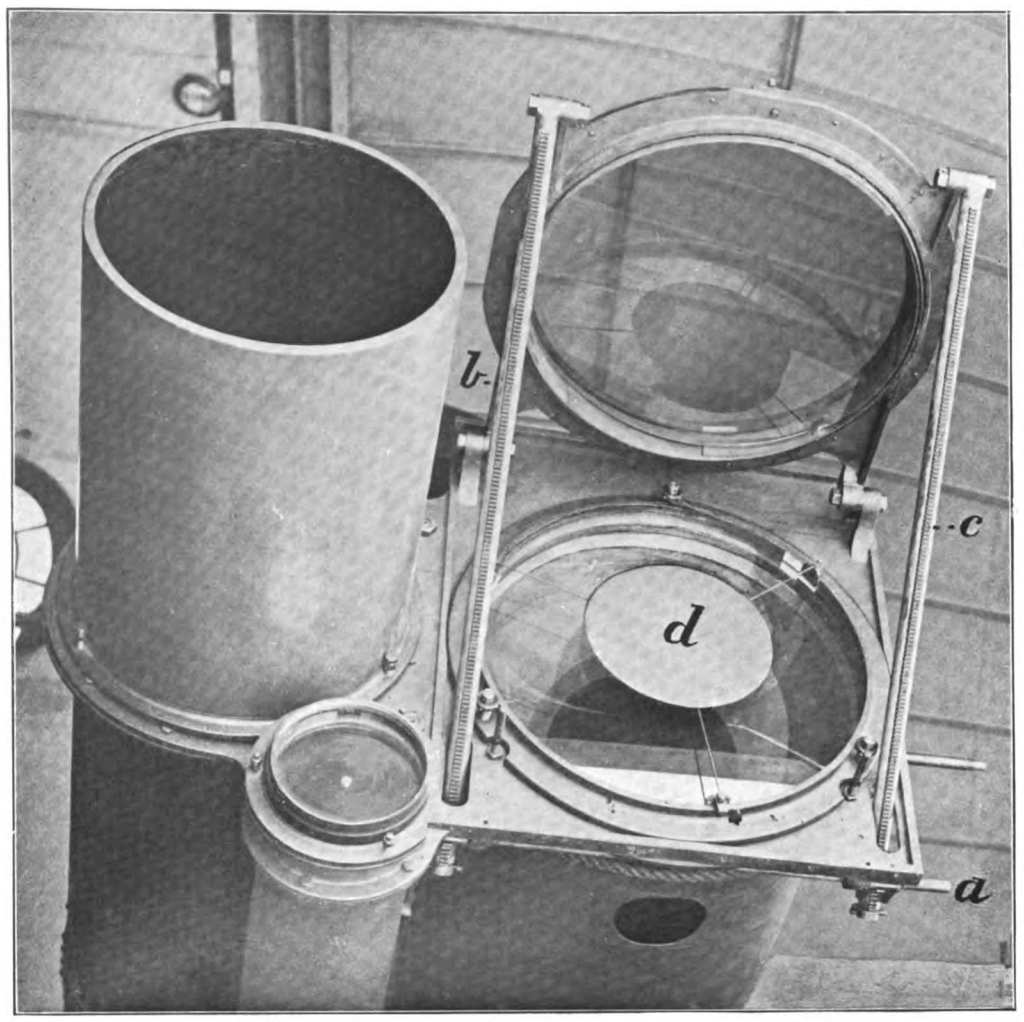

PLATE X.

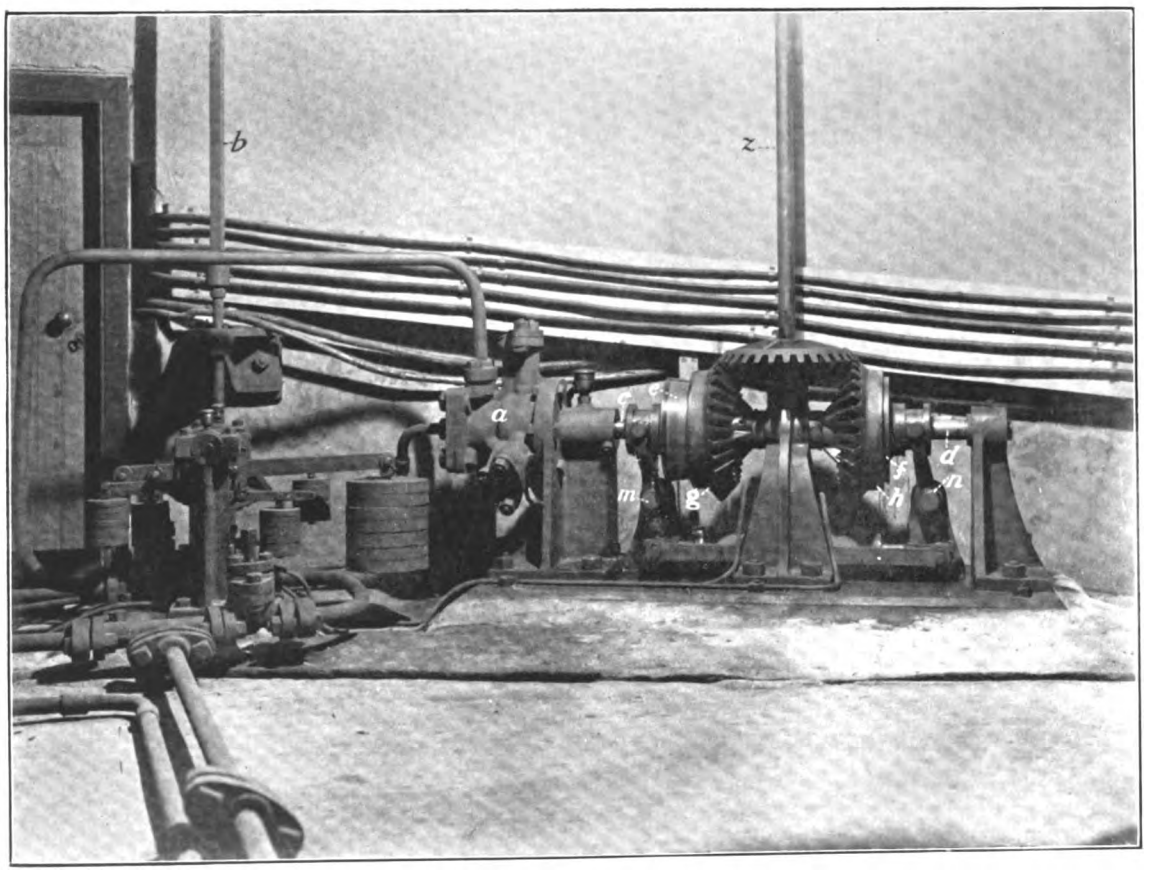

PLATE XI.

Digitized by Google

Digitized by Google

PART II.

THE SPECTROSCOPE

AND

OBJECT-GLASS PRISMS.

Digitized by Google

PART II.

THE SPECTROSCOPE

AND

OBJECT-GLASS PRISMS.

THE SPECTROSCOPE.

GENERAL PRINCIPLES OF CONSTRUCTION.

THE general principle of the construction of the Spectroscope may be gathered from the following fig. 1, which is a copy of my original schematic design.

This was forwarded, with the following descriptive explanation, to Mr Horace Darwin, by whom the working drawings were prepared. From his drawings the instrument was constructed under Mr Darwin's supervision by the Scientific Instrument Company of Cambridge :—

The leading idea in designing the Spectroscope was to construct an instrument suited as perfectly as possible for determining star-motions in the line of sight, by displacement of lines in the neighbourhood of Hγ.

The three prisms to give a total deviation of 180° and to be mounted permanently, without adjustments, rigorously in minimum deviation for Hγ. For this purpose the prisms are to be contained in a cast-steel box the form of which is shown in figs. 1, 2, and 3.

Fig. 1 shows, *inter alia*, a sectional elevation of the prism-box.

„ 2 „ a plan of the box, the top being removed.

„ 3 „ a vertical section and elevation of the box through the refracting edge of the middle prism.

The adjustment of the prisms for minimum deviation is to be obtained solely by filing and grinding or scraping the projections at *a*, *b*, *c*, *d* (fig. 1) which are cast on the bottom of the box. For reasons afterwards explained, these projections, or points of support, are not along the central line of the base of the prisms, but at one side, as shown at *c* in fig. 3.

We have next to secure the further rigorous condition that the refracting edges of all the prisms are parallel to each other, and the approximate condition that the three planes, which pass through the centres of the refracting edges at right angles to these edges, are coincident.

For this purpose it is best to rely on three projections *e*, *f*, *g* (figs. 1 and 3), cast on the side of the box.

If the box is laid upon its side so that the prisms rest upon the points *e*, *f*, *g*, with their bases touching the projections *a*, *b*, *c*, *d*, all the optical adjustments can be tested and perfected.

It remains then to provide proper spring-pressure :

1. To preserve the side of each prism in contact with the points *e*, *f*, *g*.
2. To preserve the bases of the prisms in contact with the points at *a*, *b*, *c*, *d*.
3. To prevent movement of the base of the first prism in direction of the line *a b*, of the second along *b c*, and of the third along *c d*. Very small movements along these lines are of no consequence ; therefore spring pressure is not necessary.

Digitized by Google

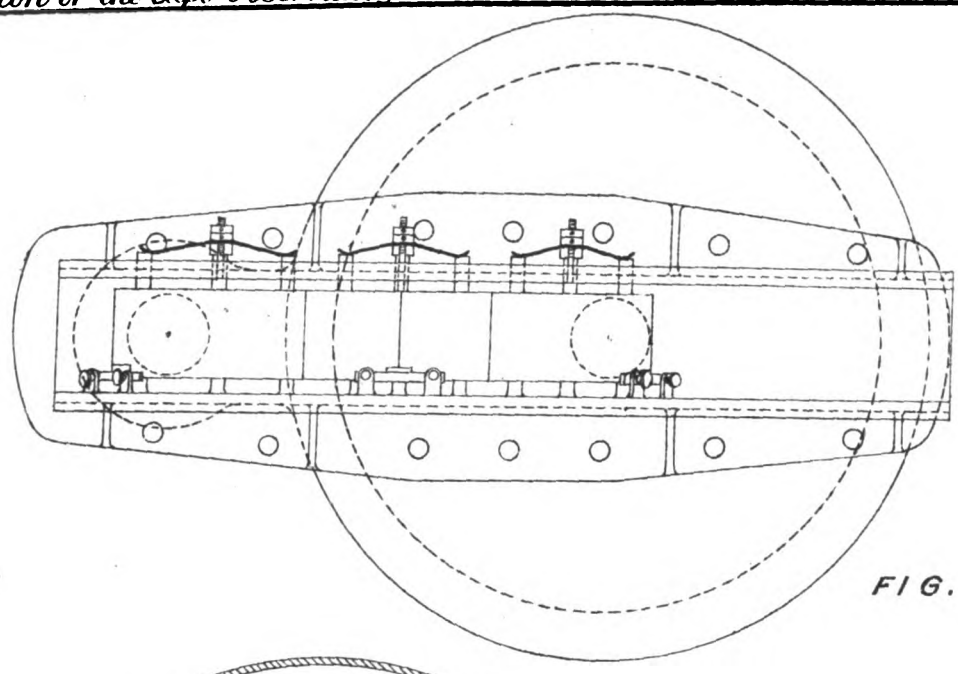

FIG. 2.

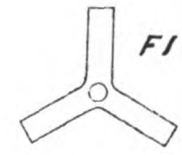

FIG. 4.

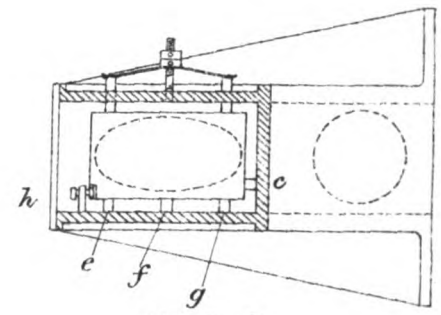

FIG. 3.

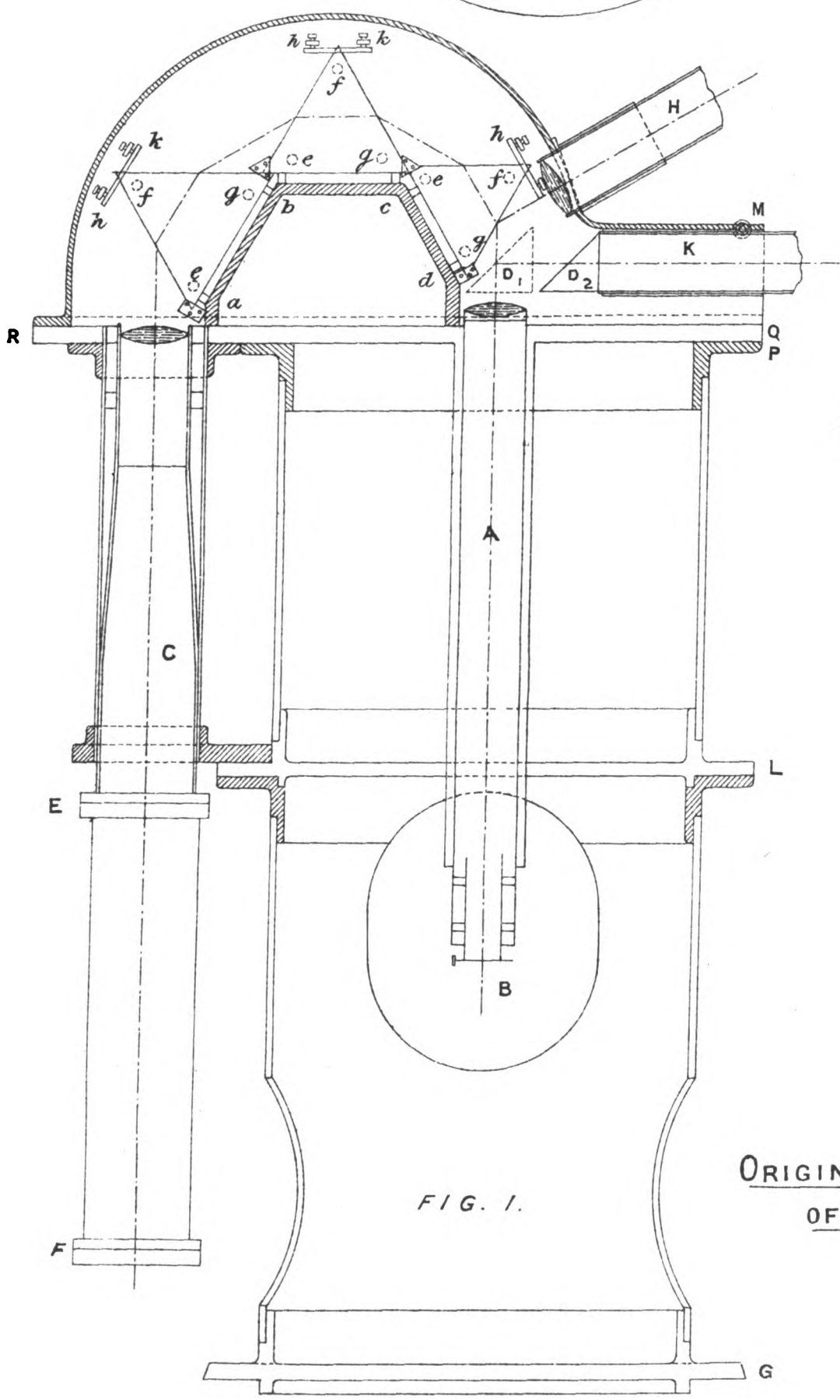

FIG. 1.

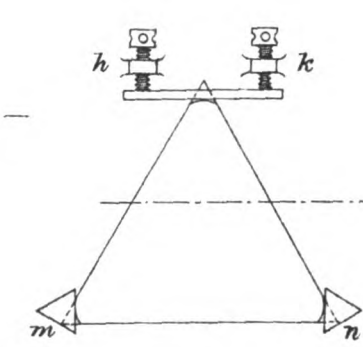

FIG. 5.

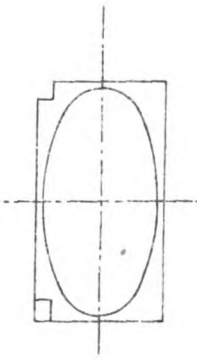

FIG. 6.

ORIGINAL SCHEMATIC DESIGN OF THE SPECTROSCOPE.

Digitized by Google

Digitized by Google

Evidently the best method for the first of these purposes is to have three pins pressing each prism at points exactly opposite *e*, *f*, *g*. These pins, smoothly fitting holes in the side of the box, are pressed against the side of the prism, as shown in fig. 3, by a spring of the shape shown in fig. 4.

To preserve the prism in contact with the points at *a*, *b*, *c*, and *d*, the vertex of each prism is cut away in the manner shown in figs. 5 and 6, so as to expose a cylindrical surface suitable to receive the necessary pressure, at right angles to the base, by a spring pressing in a direction parallel to the base.

This arrangement explains why the projections *a*, *b*, *c*, *d* were not placed in the centre of the base of the prism, because in that case it would have been necessary to apply the pressure, for keeping the prisms against these points, at the centre of the refracting edge, where it is undesirable to do so. *h* and *k* (figs. 1, 3, and 5) are projections attached to one side of the prism-box; screws pass through these to regulate the pressure of the spring on the prism.

In preventing motion of the prism along a line parallel to the axis of the base of the prism, it should be remarked that very small motion of a prism in this direction is of no optical consequence, so that springs against stops would be an unnecessary complication. But, to prevent possibility of chipping, somewhat similar notches are cut at the corners of the base of each prism next the side that rests on the projections *e*, *g*, so that the stops *m* and *n*, fig. 5, may also bear as tangents to cylindrical surfaces. These stops *m* and *n* are attached to the side of the box, but the prism may have a slight freedom between these stops, and indeed there must be enough of freedom to prevent the possibility of crushing the prism by the greater contraction of the iron if the spectroscope should be exposed to very low temperatures.

This plan of prism-mounting limits exactly the geometrical degrees of freedom, and seems to be the best possible for securing permanence of adjustment in all positions of the instrument without fear of undue pressure on any part of the prisms.

The general schematic plan of the instrument will be gathered from fig. 1.

A is the collimating telescope, B the slit, C is the camera-telescope with interchangeable object-glasses of different foci so that the dark slide may be attached either at the flange E or F at pleasure.

H is a fixed telescope for viewing the slit from behind, by reflection from the first surface of the first prism, K a sliding telescope, movable by a rack and pinion at M, and fitted with a prism of total reflection D. When in the position D_1 this telescope can be used to view objects in the plane of the slit, or, by withdrawing its eyepiece, to examine whether the object-glass of the collimator is filled with light. In the position D_2 the prism is removed from the path of the rays which come from the collimator object-glass to the first prism.

The flange G of the spectroscope is to be attached to the telescope by bolts through the flange of a breech-piece capable of rotation.

The tubes which support the plates Q R (to which the prism-box is attached) are of solid-drawn steel tube, flanged at P, L, and G, there being a strong diaphragm at L to stiffen the whole, and to afford support for the forward bearing of the collimator tube. The after-bearing of the collimator tube is in the plate Q R; the steel tube from G to L to be a quarter of an inch thick, with apertures as shown to give access to the slit and the comparison spectrum apparatus.

The tube carrying the slit B is to slide on geometrical bearings in the collimator tube, in order to adjust the slit in the principal focus of the collimator object-glass; and the collimator tube to slide in geometrical bearings in the direction of its length, in order to adjust the slit in the principal focus of the 24-inch object-glass.

The general principles to be followed in planning the details are:—

1. No unnecessary finishing or polishing to be attempted; all parts that do not involve fitting or working surfaces to be painted.

2. When a telescope or tube has a sliding motion for focal adjustment, the ordinary optician's plan must not be followed, viz. to have one tube to slide within another, the outer tube being split and squeezed together on the inner tube by a clamping ring. This plan is quite unsound. Every sliding tube must be of solid-drawn steel with outer or inner stiffening collars at the two sections where the tube touches its bearings. If internal collars are used the tube must be turned of slightly smaller diameter than the cylindrical parts which slide in the bearings. The parts of the tube which slide in the bearings must be truly finished coaxial cylinders.

These true cylinders on the tube must fit smoothly in their bearings and the latter be then scraped away so that the cylinders on the tubes may slide in three symmetrical segmental bearings. Any minute freedom of the tube within the segmental bearings can be eliminated by a plug passing through the centre of one of the bearings and pressed against the cylinder by spring pressure.

Digitized by Google

Throughout, the greatest attention is to be paid to the solidity of all bearings and the reduction of the number of bearings to the minimum necessary to limit the geometrical degrees of freedom.

These notes (here somewhat condensed) were forwarded to Mr Darwin on the 18th September 1895.

THE SLIT AND COMPARISON APPARATUS.

The following instructions and schematic sketches for construction of the slit and comparison apparatus were forwarded to Mr Darwin on the 14th October 1895.

The mounting of the slit is shown in figs. 7, 8, and 9.

The objects of this form of proposed mounting are :—

1. The jaws of the slit must be preserved perfectly true and perfectly parallel, must never be permitted absolutely to close (for fear of injuring each other), must move symmetrically apart with respect to the axis of the collimator in a true plane at right angles to the collimator axis.

2. It must be possible to have easy access to the whole length of the slit.

3. It must be possible to place the image of a star without trouble or difficulty on the centre of the slit.

4. It must be possible to introduce light from an artificial source at the slit without trouble and with the certainty that the object-glass of the collimator will be filled with light from that artificial source.

5. It must be possible to limit the length of the slit and to use only its exact centre.

6. It must be possible to cut out the exact centre of the slit and to expose to the artificial light a narrow portion of the slit on each side of the centre.

7. The edges of the slit, and those limiting the length of the slit or those cutting out part of its centre, must be as nearly as possible in the same plane.

(1) It will be evident from figs. 7 and 9 that the two halves of the slit are mounted on the steel slides A B which move in the cast-iron guide-box *a*, *b*, *c*, *d*, fig. 7. The slides A and B are carefully ground so as to move easily and without shake.

Both these slides are pressed together by strong spiral springs in the manner shown in fig. 9 (which is practically the same as that adopted by Troughton & Simms in their micrometers). The strong steel pins *e* and *f* screw into the slides B and A respectively, and project through slots in the bottom of the guide-box *a*, *b*, *c*, *d*. (It would be better still if solid projections cast with the slides were substituted for the steel pins.) There is an arm *y* (figs. 7 and 9) turning upon the screw *g*, and a screw *h k* (fig. 9) prevents this arm from turning. We have thus the pin *f* of the slide A pressed against one end of the pivoted arm by the spiral springs in slide A, and the pin *e* of the slide B pressed against the opposite end of the pivoted arm by the spiral springs of slide B—that is to say, all the four spiral springs are pressing against the end of the screw *k h*.

It is clear, then, that by turning the screw *h k* the jaws of the slit (which are attached one to A, the other to B) will be moved symmetrically with respect to the collimator axis, and, if the slides are well fitted, with perfect accuracy of motion.

A stop between the slides A B prevents their closing farther than to correspond with a width of $\frac{1}{10,000}$ of an inch in the slit.

The graduated head at *h* (figs. 8 and 9) enables the width of the slit to be read off—the reading for minimum distance and the minimum distance itself being known. (These constants may be most readily determined with a micrometer attached to the telescope by which the slit is viewed from behind, when the prism of total reflection is interposed.)

A convenient value for the screw would be two threads per millimetre; thus one revolution of the screw would move each jaw of the slit 0·50 mm.—*i.e.* would widen the slit itself 1 mm.—which is enough for any purpose; thus the motion of the slit may be limited to one revolution, so that the readings of the head will become the measure of the width of the slit.

(2) In fig. 7 there is shown in section at *v w* an accurately fitting outer slide, which is moved by a rack and pinion *m m* over a limited range so that the notch *q* or *t* (fig. 8) can be brought to the point *p*.

In fig. 8 the jaws of the slit are indicated at *x*, and the outer slide is shown in such a position that the central perforation in it is opposite the jaws of the slit. This perforation is a rectangle about 0·15 inch in width and about 0·5 inch long, so that when it is desired to clean the jaws of the slit (by drawing a quill between them), or to expose the whole length of the slit (say to photograph the solar spectrum in order to determine the curvature of the lines),

Digitized by Google

Digitized by Google

ORIGINAL DESIGN OF THE SLIT AND COMPARISON APPARATUS.

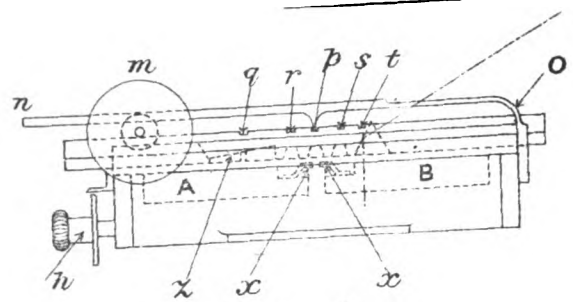

FIG. 8.

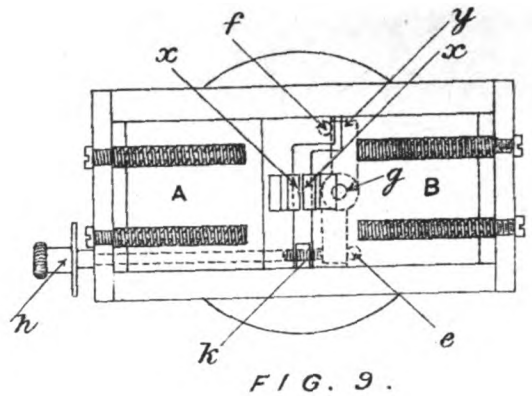

FIG. 9.

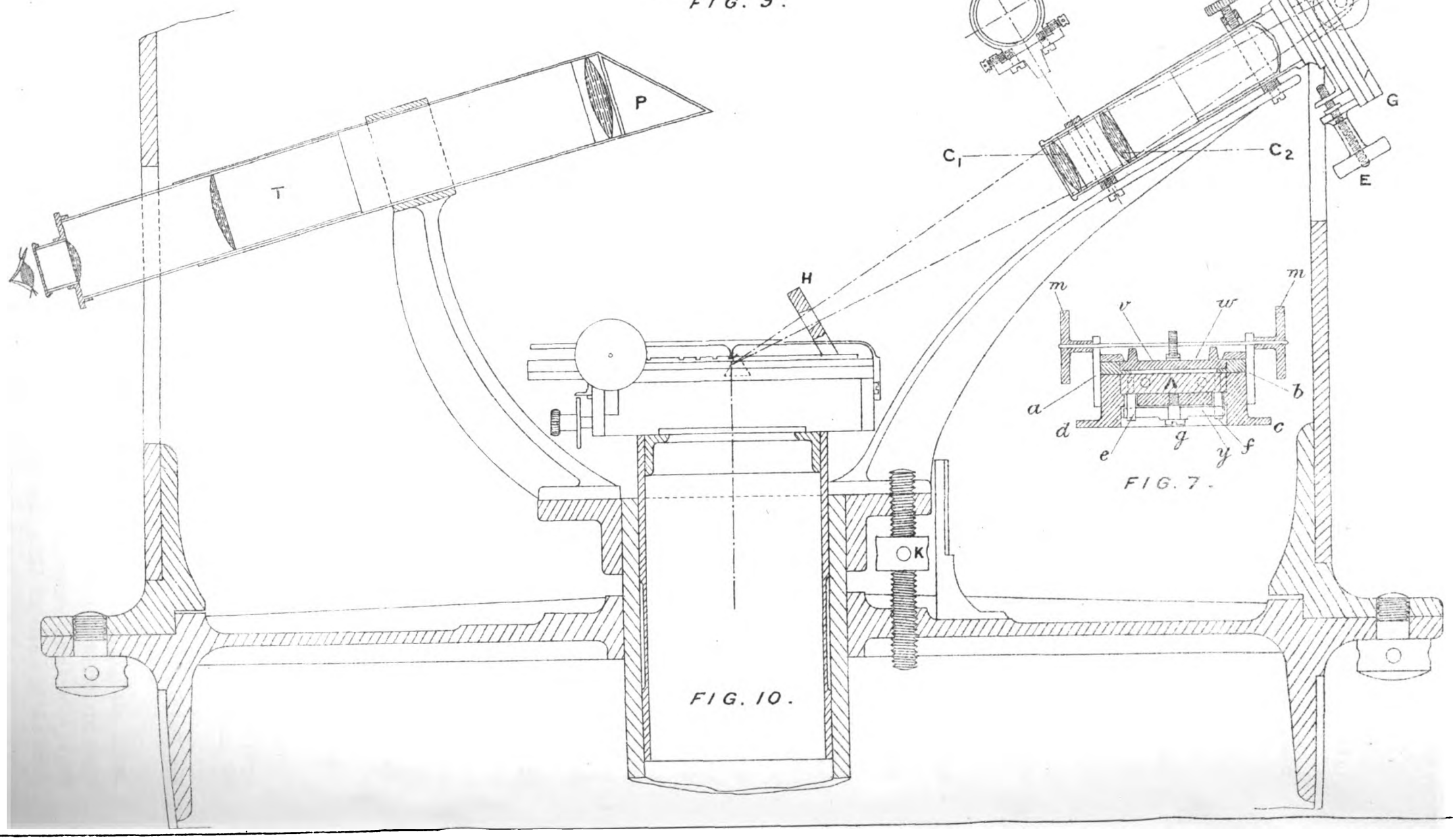

FIG. 10.

FIG. 7.

To face page 21.

Digitized by Google

the outer slide will be in the position shown in fig. 8, and be there held by the spring clutch *n o*, whose wedge-shaped points *p* (one being hid by the other) rest in notches cut in the two ribs of the outer slide.

(3) If now we wish to place a star accurately in the middle of the slit, we raise the spring clutch by lifting it at *n*, and thus remove the points *p* from the notches, turn the pinion by the handle *m* till the notch *q* is moved under the wedges *p*, and then drop the clutch into the notch *q*. By this process we bring the thin speculum-metal plane mirror *z* centrally over the slit. This plane mirror is formed on a thin wedge-shaped piece of speculum-metal, so that its lower surface is parallel to the motion of the slide, and *just clears* the plane of the slit. The optical surface of the mirror is a plane inclined at such an angle to the axis of the telescope as to reflect the light falling from a star (whose image is formed near the slit) to the prism P of the small telescope T (fig. 10). The centre of the speculum-metal is perforated by a small hole (say 0·01 inch in diameter) whose axis is coincident with that of the collimator (and therefore passes through the centre of the slit) when the wedges *p* rest in the notches *q*.

Thus all the stars within a radius of some minutes of arc from the centre of the slit will be visible in the field of the very low-power telescope T (fig. 10), together with a less sharply defined image of the edge of the small hole, which will appear as a black spot. (It may be necessary to slightly illuminate the surface of the mirror by light from a small ruby glass electric incandescent lamp.) By the slow-motion handles in R.A. and Dec. it will be easy enough to put the image of the star on this black spot, when it will disappear, and will then necessarily be in the centre of the slit.

This method has practically been already used by Huggins, only that he made the surface of the speculum-metal jaws of the slit serve as the mirror; and in this way the images of the star and slit were in the same focus.

But the outer surfaces of the slit were necessarily no longer in a plane normal to the optical axis of the collimator, and I prefer to have the small difference in focus between the star's focus and that of the slit (which with a very low-power telescope will be of no consequence) and preserve the outer surfaces of the metal (iridio-platinum) jaws of the slit rigorously in a plane at right angles to the collimator axis.

Of course, the thinner the metal and the closer the back surface is to the slit, the less will be the difference of focus in question.

(4) Let us now lift the spring clutch and move the notch *t* under the wedge *p*; we then bring a 60° prism *t* over the slit so that its base is normal to the collimator axis, and the latter cuts the base of the prism at one-fourth of the base from one angle of the prism. Then, in the manner shown in fig. 10, light from a source S will enter the slit and fill the collimator object-glass.

The condensing combination C (fig. 10) should be very accurately figured; that is a point which, so far as I know, has been too much neglected in all spectroscopes hitherto employed.

The best optical construction for C will be two well-made object-glasses, each of 1-inch aperture and 7 inches focal length; if made in the usual way their crown lenses should be turned towards each other. The position of C will be half way between the artificial source of light and the slit, measured along the path of the central ray; the slit will be in the principal focus of one object-glass, the source of artificial light in the principal focus of the other. Care should be taken that the common optical axis of the combination is inclined exactly 60° to the optical axis of the principal telescope, and so as to intersect the prism exactly at the proper point. If the arm carrying C is attached to the collimator (as shown in fig. 10), then the adjustment of the slit to the focus of the principal telescope will not affect the above adjustment, which may therefore be permanently made once for all, and the object-glass C, which is next the slit, may be permanently fixed so that the slit itself is in its principal focus. A small adjustment may be given to the object-glass C_2, which is next to the source of light S, for adjusting the latter in its principal focus; but probably it will not require to be touched after it has once been adjusted, provided that the necessary precautions are adopted in the method of mounting the artificial source of light at S.

The plate D G carries the vulcanite pillars (not shown) which form the mounting of the vacuum tube, or for the iron terminals electrically connected with the induction coil. This plate D G is mounted on two slides at right angles to each other having about $\frac{1}{8}$-inch of motion in either direction by means of the screws E and F. (The heads of these screws should be of ivory or vulcanite.)

By means of the screws E and F the centre of the vacuum tube or the spark between the iron points can be accurately adjusted to coincidence with the optical axis of C. This adjustment can be very quickly made by means of the diaphragm H. This diaphragm should be just of the size to pass all rays converging on the slit from a point at S, when all the adjustments are perfect. If S has sensible dimensions, the margin of the hole in H will be symmetrically illuminated when the adjustments are perfect—any want of symmetry in this illumination can be corrected by moving the source of light by the screws E and F.

(5) Let us now suppose that the spring clutch *n o* is again lifted, and the notch *s* (fig. 8) is brought under *p*,

Digitized by Google

so that a hole in the outer slide at *s* (about 0·1 inch in diameter) is opposite the centre of the slit. It is required to limit the length of the slit by another slit at right angles to the spectroscope slit proper, *and as nearly as possible in the same plane*, so that the edge of the photographed spectrum shall be as sharp as possible. For this purpose there will be screwed to the lower side of the outer slide (*i.e.* the side next the slit) two pieces of iridio-platinum forming a slit at right angles to the slit proper, and of a thickness sufficient to just clear its surface. If the work is well done the edges of the two slits need not be more than 0·001 inch apart, and that without fear of fouling each other.

The width of this cross slit should be the width which it is proposed to give to the spectrum of the star by traversing the star backwards and forwards along the jaws of the spectroscope slit proper during the exposure, by means of the slow motion in R.A. Probably the most useful value for the length of slit will be about 0·4 mm., but it will be easy enough to make the width slightly adjustable so that the jaws can be ultimately set at the most convenient width.

(6) When an artificial spectrum is to be compared with the star, it is necessary to stop out the central part of the slit so that the fine bright iron lines shall not obliterate the corresponding dark lines of the stellar spectrum; but it is also desirable that the comparison spectrum should slightly overlap the edges of the stellar spectrum.

For this purpose it will only be necessary, where the notch *r* is central with the slit, to have a corresponding aperture in the outer slide, about 0·1 inch in diameter, opposite to the centre of the slit, and to attach a narrow bar of iridio-platinum across the back of the aperture.

This will preserve the centre of the star spectrum from being affected by the light of the comparison spectrum, and allow it to slightly overlap on each side of it, and it will give a convenient length for the lines of the comparison spectrum (0·9 mm.) on each side of the star spectrum.

GENERAL NOTES.

The drawings sent are to be regarded as schematic, not as working drawings.

In fig. 10 especially the following important improvements can be made:—

1st. Abolish the sliding tube which is provided for adjustment of the slit in the principal focus of the collimator object-glass in fig. 10, and shift this adjustment to the other end of the collimator tube. This adjustment being once made (for Hγ), experience goes to show that it will not require readjustment. There is therefore less need for easy access to it, and it will be much better to attach the box containing the mounting of the slit rigidly to the flange of the collimator tube, providing a larger flange on the slit-box for this purpose.

2nd. Let the position of the slit-box shown in fig. 1 remain unchanged on this account, but bring the collimator tube and its flange up to it as in fig. 10.

3rd. Increase the length of the collar or bearing in which the pivot of the collimator tube slides by about three-quarters of an inch towards the slit, so as to allow the clamp to be accessible through the aperture in the adapter-tube; or, better, bring the key of the clamp outside the adapter.

4th. Shift the position of the right- and left-handed screw K in fig. 10 (by which the slit is set to the focus of the 24-inch object-glass) to the other side, where it will be more accessible.

5th. Shift the apparatus for reading this focal adjustment to the other side; and, instead of attaching an index to the flange and the scale to the pillar, attach the index to a pillar and the scale to the flange. In this way the index and adjoining divisions of the scale can always be read by a small fixed telescope passing through a hole in the adapter, and be illuminated by a small fixed incandescent lamp, which is lighted by a *switch at pleasure*.

With regard to fig. 8, it has since occurred to me that no very accurate adjustment is required for the position of the slide in the positions *r*, *p*, *s*; therefore the point of the clutch may be made of a much larger angle than shown at *p*, so that the action of the rack and pinion alone will be enough to raise the clutch. For the positions *q* and *t*, which require to be very accurate, stops will be more accurate than any clutch, and these stops can have screw adjustment. The slide can be moved against these stops by the rack and pinion, and the clutch can be arranged to keep the slide against these stops.

From these schematic plans and instructions, the working drawings for the instrument, as subsequently described, were made by Mr Horace Darwin, F.R.S. The improvements in the original design, introduced by Mr Darwin, are acknowledged in the text. The work was carried out under his supervision in the most admirable manner by the Cambridge Scientific Instrument Company, and Mr F. H. Newall, F.R.S., very kindly undertook the final examination of the optical adjustment of the prisms, etc., before the instrument was originally sent to the Cape.

Digitized by Google

THE SPECTROSCOPE AS CONSTRUCTED.

The Slit and Comparison Apparatus.

In the original design of the spectroscope the inclined speculum plane *z* (fig. 8) was not intended to be used for keeping the star on the slit during exposure, but merely when interposed as a means of *finding* the star on the slit. The slit was then to be viewed from behind by reflection from the first surface of the first prism, or by interposition of the prism D (fig. 1). Then the telescope was to be moved by the slow motions in R.A. and Decl. until the star, as viewed in the manner described, was seen at its brightest in the centre of the slit. The centre of a spider-line in the focus of the 18-inch telescope, representing the slit and defined in length by two other spider-lines at right angles to the first one, was then to be adjusted micrometrically to coincidence with the star's image. The spider-line, so adjusted, would then serve for guiding throughout the exposure in the same manner that the guiding telescope is used in the exposure of *carte du ciel* plates—or the star's image from behind the slit might be watched by the telescope H or K.

But, on the strong advice of Sir William Huggins, his original plan of having the slit made of speculum-metal and using its front optical surface for guiding the star during exposure was finally adopted, and found, on the whole, to work so well that little use was made of the telescopes for viewing the slit from behind.

Plate I. is from a photograph of the slit and slit-box taken from a point nearly in the direction of the axis of the collimator.

1 is the graduated head of the screw which regulates the width of the slit; its point presses against two similar levers, shaped like bell-cranks, whose fulcra are at 3 and 4.

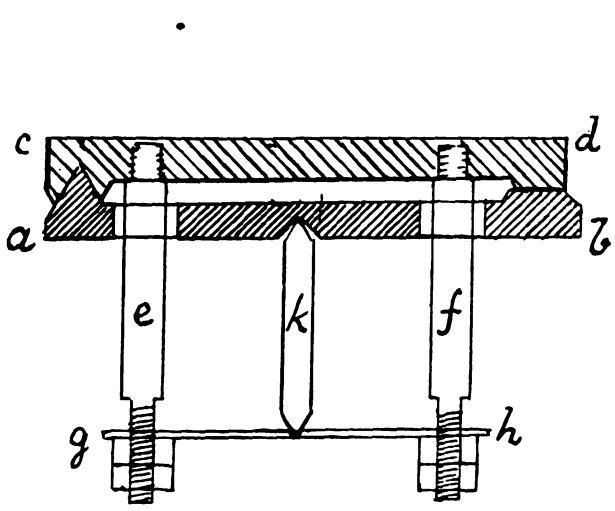

Fig. 11.

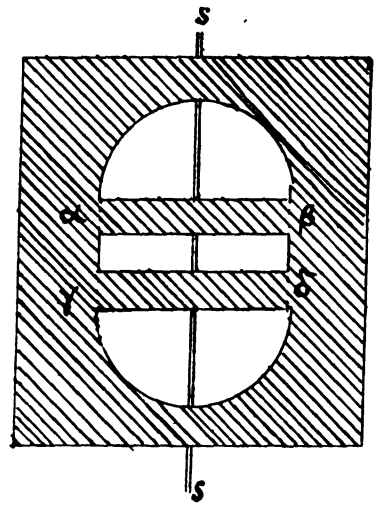

Fig. 12.

2 is the speculum-metal slit whose outer surface is an optical plane; but the plane is slightly inclined to the normal to the collimator axis, so that a star may be viewed by reflection from it by means of a telescope and prism 14, Plates IV. and XII.

The plates which carry the two halves of the speculum-metal slit are mounted on rails planed on the base-plate of the slit, as shown schematically in fig. 11.

To keep the slide *c d* in contact with the rails in all positions of the instrument the following elegant method was adopted by Mr Darwin :—

a b is the base-plate of the slit, *c d* the slide which carries one jaw of the slit. *e* and *f* are pillars screwed into *c d*, and passing through slots in *a b*. *g h* is a steel spring which, by means of the screws at *g* and *h*, can be made to exercise any desired tension on the pillars *e* and *f*. If this tension is greater than the weight of the slide, then *c d* cannot fall off, and for very small motions of the slide, such as are required for the adjustment of a spectroscopic slit, the tension is constant. Of course, at the side *c* of the slide the furrow in the slide is cut away, except for two short bearings near the ends of the slide; and at the side *d* there is only a bearing at the centre of the slide.

It will be seen now from Plate I. that the action of the screw 1 is only to open the slit; the slides are closed by pressure of the bent hardened and tempered steel wire spring 5, acting directly opposite the points where the bent levers bear on the slides.

Digitized by Google

6 is the head of a fine screw which prevents the slides from closing sufficiently to produce contact between the edges of the slit.

7 is the perforated gold plate which, when moved by the screw 9 to the centre of the slit, is employed to define the width of the star spectrum. It is of the form shown in fig. 12 on the scale of 20 times that of the original.

The bars $\alpha\beta$ and $\gamma\delta$ limit the length of the slit along which the star is traversed during exposure.

8 is another thin perforated gold plate which, when moved by the screw 9 to the centre of the slit, covers the portion of the slit used in taking the spectrum of the star, and exposes the portion of the slit used for the comparison spectrum. It is of the form shown in fig. 13. Here the centre of the slit is cut out and light admitted at ϵ and ζ. These bars are about 0·25 mm. in width.

As already mentioned, the plate 10, which carries the perforated gold plates 7 and 8 with their adjusting screws, is traversed by the screw 9. This plate 10 travels with great precision on a slide with geometrical bearings arranged on the following principle (fig. 14):—

S is the slide to which the plate 10 is attached. The wheel W is urged by spring pressure against a plane rail on the slide S, and this wheel keeps the slide in contact with the bearings.

Besides the perforated gold plates, the slide carries the 60° prism 11, shown in Plates II., III., and IV., and which reflects the converging cone of rays from the spark apparatus to the slit, so that the axis of the cone is accurately coincident with the axes both of the principal telescope and of the collimator. This prism is removed in Plate I. for sake of clearness.

12 is a steel spring which presses the slide 10 against the end of the screw 9.

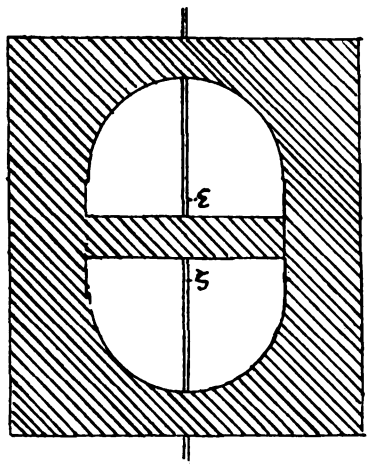

Fig. 13.

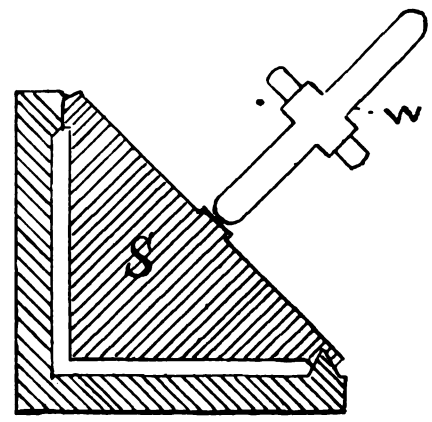

Fig. 14.

13 is the wheel forced by a spring against the slide 10, as in fig. 14. Upon the axis of the screw 9 is a hollow drum on which is cut a screw of the same pitch as that of the screw which moves the slide 10. The object of this drum is to mark the points when the perforated gold plates are in their proper positions in front of the slit. This was effected by a rounded point pressed by a spring into the thread of the drum-screw, which entered a notch in the thread when either the perforated plate 7 or 8 was in its proper position.

Instead of a notch in the thread of drum 9, to mark when the comparison prism is in its place in front of the slit, it was found more convenient to have a pin 16, Plate II., on the end of the drum 9 which, when 9 is unscrewed until the prism is in position, comes in contact with the stop 17.

But as the slit can be viewed by the telescope and prism 14, Plates IV. and V., when illuminated by the small ruby-coloured electric lamp 15, the much better plan was introduced of setting these perforated plates to three lines ruled on one jaw of the slit at right angles to the length of the slit. These lines are about 0·25 mm. apart, and the central line at its intersection with the slit marks the collimator axis.

The tube 18, Plates IV. and XII., carries two achromatic lenses. One of these has the slit (when viewed through the prism) in its principal focus, the other objective is moved by the screw 19 till the spark or vacuum tube is in its principal focus. 20 is a vulcanite block carrying the adjustable sparking points, a vacuum-tube holder and terminals for connection with the secondary of an induction coil. This block is mounted on the jointed arm 23, and can be adjusted by means of the screws 21 and 22 so that the image of the iron sparking points, as viewed in the telescope 14 by reflection from the slit, is formed exactly on the slit. Since one lens is permanently fixed and the prism 11 permanently adjusted, so that when it is interposed a ray of light from the optical centre of the collimator object-glass passing through the slit will be reflected by the prism 11 along the optical axes of the two lenses, and, as the angle of the cone of rays falling on the slit has a much larger angle than the collimator objective subtends at

Digitized by Google

the slit, then if the image of the spark falls in focus on the slit the collimator objective must be filled with light.

The practical method of adjusting the image of the spark in focus on the slit is as follows :—A small ruby-coloured electric lamp 53, Plates VI. and VII., is fixed at the end of the bent arm outside the vulcanite block 20, and nearly in the optical axis of the lenses. Then in the field of telescope 14, which is focussed upon the slit, are seen the images of the iron sparking terminals. The head 19, Plate IV., is next turned until the images of those terminals are in sharp focus, and they are then adjusted symmetrically with respect to the centre of the slit by means of the screws 21 and 22.

Of late an additional precaution has been adopted, viz., a disc of ground glass has been mounted on the lid of the slit-box, so that it can, when desired, cover the hole through which the cone of rays from prism 11 passes to the slit. This practically ensures that, even with considerable error of adjustment, the object-glass of the collimator will be filled with light.

FOCUSSING AND CLAMPING ARRANGEMENTS.

As already mentioned, the box containing the slit is attached permanently to the strong steel tube of the collimator. This tube moves in ground segmental bearings which are formed in the centre of the diaphragms of the strong steel tubes by which the prism-box is attached to the telescope.

To bring the slit into the focus of the 24-inch object-glass the collimator tube must be moved in the direction of its axis. This is accomplished by a lever, shaped like a bell-crank, of which the joint or fulcrum and the mode of attachment are shown at 24, Plates I. and II., and schematically in fig. 15. This lever is moved by a screw of

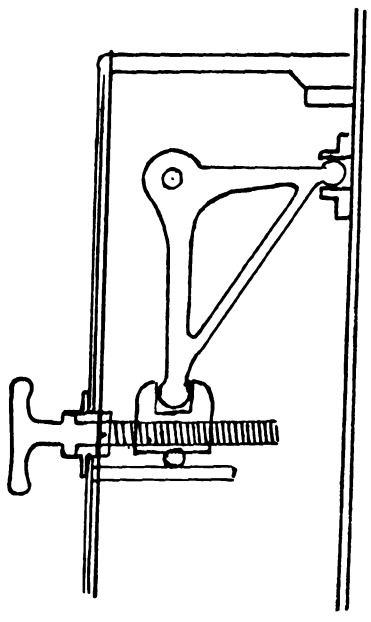

Fig. 15.

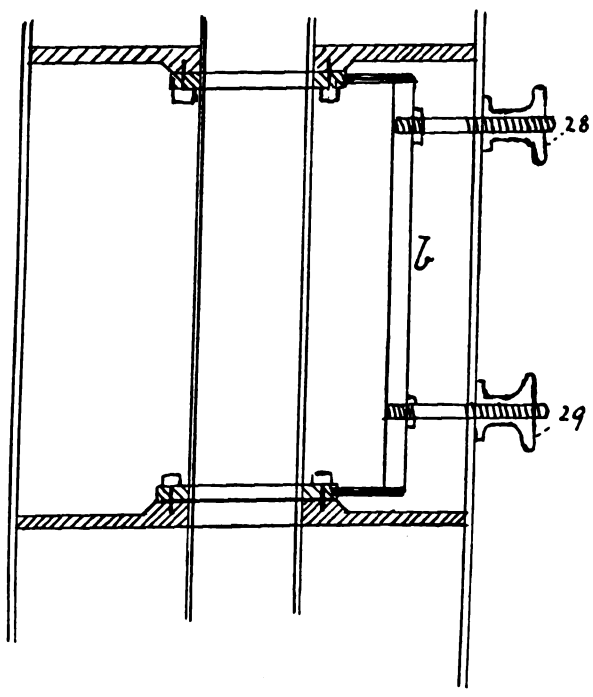

Fig. 16.

which the head 25 is shown in Plates IV. and XII. One cylindrical end of the crank-lever enters a slot in the collimator tube, the other end enters a slot in a block which is moved at right angles to the collimator axis by the screw, as shown in fig. 15.

The focussing scale is shown at 26, Plate XII. It is divided to $\frac{1}{10}$ of a millimetre and can be read to $\frac{1}{100}$ of a millimetre by estimation. The graduations are figured at each millimetre. This scale is read by the microscope 27, Plates V. and VII.

The clamping of the collimator tube is very satisfactorily arranged by rings which fit smoothly and accurately on the tube alongside its two bearings, as in fig. 16.

Each ring is kept up to its adjoining segmental bearing by screws which, without clamping the ring rigidly to the bearing, prevent the ring from being drawn by the tube away from the bearing. Each ring is attached to the bar *b*, fig. 16, by a rod, and when the bar is drawn towards the outer tube by the finger-nuts 28 and 29, Plates IV. and XII., the collimator tube becomes rigidly clamped, and, as the rings accurately fit the very strong and accurately turned tube, no deformation of the tube is possible. This excellent plan is due to Mr Darwin. The strong spiral spring 30, Plate IV., is provided for preventing rotation of the collimator tube in its bearings

Digitized by Google

when it is unclamped and being adjusted for focus. The spring pulls tangentially to the tube, keeping the bar which carries the scale (the bearing edge of this bar being parallel to the collimator axis) in contact with the rounded end of a screw. This screw obviously serves to adjust the slit at right angles to the refracting plane of the prisms, an adjustment which, once made, requires no subsequent alteration.

31, Plates III. and XII., is a counterpoise which balances the collimator box about the axis of the collimator.

32, Plates III. and XII., is the head of the rod that turns the screw by which the collimator object-glass is adjusted so that the slit is in its principal focus. The focussing scale of the collimator object-glass is divided to 0·1 mm., numbered at each millimetre, and can be read by estimation to 0·01 mm. by the microscope 33, Plates V. and VII.

The collimator object-glass is mounted on a truly cylindrical solid-drawn steel tube which moves in geometrical bearings inside the collimator tube. A single screw draws the object-glass tube into contact with four geometrical bearings inside the collimator tube. This clamping screw is turned by a rod with squared end which can be entered through the slot 34, Plates V. and XIV.

THE PLATE-HOLDER.

Plate IX. shows the plate-holder attached to the long-focus camera telescope.

$\alpha\ \beta\ \gamma$ is an oblong brass frame formed from a solid plate of brass 130 mm. long, 62 mm. broad, and 12·5 mm. thick. Its interior is 111 mm. long and 43 mm. broad ($4\frac{3}{8}$ inches × $1\frac{11}{16}$). This admits freely the half of an ordinary "quarter-plate" ($4\frac{1}{4}$ × $1\frac{5}{8}$ inches). This box is closed at the bottom by the dark slide ϵ, which moves smoothly in a groove machined out of the solid frame. The lid of the box is jointed at α and β and closed by the screw-button γ. The sensitive plate rests on three silver projections from the side of the box, and springs on the side of the box, pressing on the plate opposite these projections, keep the plate from moving during exposure.

The box rests upon δ, and is held in place by the latches 3, η, θ, which are provided with strong spiral springs (one of which is well seen at κ).

The box can be tilted in the cylindrical bearing λ, and the plate clamped at any desired inclination to the normal by means of the screws μ and ν and by two similar screws on the other side. The axis of this cylindrical slide is the centre of the sensitive film of the plate. The angle of tilt, up to $\pm 10°$, can be read upon the graduated arc ψ.

By removing the plug ρ the focussing scale can be read with the aid of a hand magnifying-glass. It is divided, like the other focussing scales, to 0·10 mm. figured at each millimetre, and can be read by estimation to 0·01 mm.

The focussing screw is on the side not shown in the photograph. The leather τ, which is tied round the aperture in the enclosure 37 and round the mounting of the slide, excludes cold air and yet does not interfere with the motion for focussing.

THE PRISM-BOX AND ITS ENCLOSURE.

Instead of making the prism-box double-sided as in the original plan, Mr Darwin omitted one side of the prism-box, but carried out the original principle by attaching the tribrach springs (which press opposite to the bearing points of the prisms) to brackets which are attached to the rib *a b c d*, as shown in Plate XI.

The projections near *a*, *b*, *c*, and *d*, Plate XI., which serve to define the position of the prisms in minimum deviation, are not visible in Plate XI. on account of shadow. The crank levers, actuated by spiral springs at *e*, *f*, and *g*, press upon the flattened corners of the prism* (where the refracting edge is cut away near one corner) and so keep the prisms in contact with these projections.

H, Plate XI., is the telescope for observing the back of the slit by reflection from the first surface of the first prism.

K, Plate XI., is a telescope with a right-angled prism of total reflection D, which, by means of a rack and a pinion, turned by M, can be moved so that D intercepts the rays from the collimator, and the slit can be viewed by the telescope K.

The three original prisms, constructed by Brasher, were somewhat coloured and found to absorb an undesirable

* The object of cutting out or flattening a small portion of one refracting corner of each prism is to allow the ends of the levers *e*, *f*, *g* to press upon a flat surface parallel to the base of the prism, as it would obviously be dangerous to allow pressure on the edge of the prism. See p. 17.

Digitized by Google

amount of the blue and violet rays. Four alternative prisms of much whiter glass, and together giving a deviation of 180°, were afterwards made by Hilger and were mounted in a manner precisely similar to that just described. The new prism-box mounted in its place is shown in Plate V.

In this prism-box no provision was made for the telescopes H and K, Plate XI., because experience had apparently shown that, with the front surface reflection of the slit, they were not necessary, and their introduction would greatly have complicated the enclosure of the prism-box with a covering, the air in which could be maintained at constant temperature. Experience with the spectroscope in its original form, as shown in description of the telescope, Plate I., had proved this precaution to be necessary in any accurate determinations of motion in the line of sight. Wrapping the spectroscope in an eider-down quilt was tried, but this precaution was found insufficient.

Accordingly, when the spectroscope was sent to Cambridge in 1901 to have the new 4-prism box made and adapted, a mahogany flange 36, (Plates V., VI., and VII.), was added, to which an outer covering, enclosing the prism-box, could be clamped. Also an enclosure 37, surrounding the upper part of the camera-telescope tube, was added, in order to ensure uniformity of temperature in the steel bracket which constitutes the upper support of the camera tube. This precaution prevents change in the parallelism of the axis of that tube relative to the axis of the collimator during exposure.

Another important adjunct was a shutter of half the diameter of the collimator object-glass moved in a slide by the rod 35, Plates V., VI., and VII. This shutter can, at the observer's pleasure, be placed so as to cut off either that half of the cylinder of parallel rays (emerging from the collimator object-glass) which enters the prisms next to their base, or the other half which enters the prisms next to their refracting edges, or it can be removed so as to allow the full pencil to pass. A spring catch slipping into notches in the sliding-rod makes it easy to place the shutter in any desired one of the three positions.

This screen enables the observer to test the focal adjustment by Newall's method, viz. by photographing two contiguous spectra of the iron lines, one spectrum being taken through the thick, the other through the thin half of the prisms. Where the lines of the two spectra are coincident, the apparatus is in perfect focal adjustment for rays of that refrangibility. Control spectra of that kind are taken before and after each "line of sight" spectrum.

The prism-box has been enclosed in a close-fitting cover of copper, so that heat may not only penetrate more slowly to the prisms but be distributed by conduction more nearly equally to all parts of the prism-box.

Means, subsequently described, for automatically controlling the temperature of the air outside the prism-box were provided, as well as means for causing air included in the outer cover to circulate through the box surrounding the camera telescope as well as around the outside of the protected prism-box.

Plates VI. and VII. show the spectroscope with the enclosing outer cover attached. This cover is made of double sheet aluminium, the space between the sheets being filled with eider-down feathers. Two doors 38 and 39, closing on cloth joints, give admission to the interior at pleasure, but it only involves the work of a few minutes to put on or remove the whole cover. Plate VIII. shows the lower part of the spectroscope still further enclosed in a thick eider-down cover, which is readily attached, and which, by reducing the loss of heat, limits the amount of electrical energy required to preserve a constant temperature.

Other Mechanical Details of the Spectroscope.

The cylindrical body of the spectroscope is formed of two flanged solid-drawn steel tubes $\frac{1}{4}$-inch thick, and the whole is very rigid.

The method of rotating the spectroscope about the collimator axis is well shown in Plates V., VI., VIII., and IX.

The powerful hand-wheel 40, Plate V., is connected with a worm screw which acts on teeth cut in the edge of the upper flange of the body of the spectroscope. The cast-iron ring 52, which forms the attachment of the spectroscope to the butt-end of the tube, is turned out to receive the turned end of the tube and the shoulder of the flange. To keep the shoulder of the flange in contact with 52 there are six wheels like 41 mounted in the manner shown in Plate V. and adjusted for pressure on the flange by the nuts 42. The rounded projection on each wheel runs in a groove in the steel flange.

43, Plates V. and VIII., is an iron rod which passes through the spectroscope and can be removed at pleasure; it supports the spectroscope when mounted on the stand—the upper end of the latter is shown in Plates IV. and XII. In Plates VI. and VII. the rod 43 is replaced by a wooden plug which stops the hole.

It will be noted that the stand shown in plates IV. and XII. is not wide enough to admit the flange 36. A wider

Digitized by Google

stand and longer bar have since been made, and the spectroscope in position for attachment to the telescope is shown on the new stand in Plate X.

The steel door 44, Plate VII., gives access to the screw-head 1, Plates I. and XII., by which the width of the slit is adjusted, and to the screw-head 32, Plate XII., for setting the collimator object-glass in focus with the slit.

45, Plate VII., is a three-way electric switch which—

a. cuts off the 6-volt current.

b. lights the small electric lamp which illuminates scale 26, Plate XII., by which the slit can be set to the focus of the 24–inch object-glass.

c. lights the small lamp which illuminates the graduated head of the screw by which the width of the slit is regulated.

The door 46, Plates VI. and VIII., gives access to the screw by which either of the perforated gold plates 7 or 8, or the prism 11, Plates I., II., and III., can be brought in front of the slit. The cover of the slit-box is also conveniently reached through this door, so that the aperture in front of the slit can be conveniently opened or closed to exclude dust, or a ground-glass screen be there interposed, as explained at p. 23.

Door 47, Plates VI. and VIII., gives access to the slide (moved by the screw-head 25) which acts on the bell-crank lever that moves the collimator tube, so as to bring the slit into the focus of the 24-inch object-glass (see p. 23).

Door 48, Plate VI., gives access to the scales of a thermometer whose bulb is in the prism-box.

49 is a three-way electric switch which—

a. cuts off the 6-volt current.

b. illuminates the scale by which the collimator object-glass can be set so as to adjust the slit in its focus.

c. lights the ruby-coloured lamp 51, Plate XII., which illuminates the back of the slit (this is practically never used).

50 is a four-way electric switch which—

a. cuts off the 6-volt circuit.

b. controls the ruby-coloured lamp 15, Plates IV. and XII., which illuminates the slit.

c. controls the ruby-coloured lamp 53, Plate VII., behind the sparking points, and so enables them to be focussed on the slit (see p. 23).

d. controls the lamp which illuminates the scale of the thermometer whose bulb is the prism-box.

52*a* is a compressible carbon cloth resistance to regulate the intensity of the light of the ruby lamp which illuminates the slit.

THE THERMOSTAT.

When the spectroscope was sent back to Cambridge in 1901 in order to have the new 4-prism box made and means applied for preserving uniform temperature, I suggested that the temperature-control might be arranged somewhat on the plan of the Callendar recorder. That is to say, if the air surrounding the prism-box is maintained above that of the outer air by means of a current of electricity passing through coils of wire inside an outer cover, the amount of current could be regulated by some system of automatic changing of the resistance in the circuit—such resistance being outside the cover.

In the well-known Callendar recorder a Wheatstone bridge having three arms of manganin and one of copper is brought to balance by automatically changing the position of the balance point on the bridge-wire, the amount of this change being a function of the temperature to which the bridge is exposed, because the electric resistance of copper varies with temperature whilst that of manganin does not. The slider, which changes the resistance to balance the bridge, then becomes the recorder of the temperature, and similar means might be employed to turn off and on an electric current or to clamp the resistance in a circuit, and so maintain the bridge in balance—*i.e.* preserve a uniform temperature.

Mr Darwin developed the following most elegant apparatus to carry out this idea—introducing methods by which not only was the resistance varied in a circuit through which a current is constantly passing, but also periodic increments of additional current through a parallel circuit were given when required.

The apparatus finally took the form shown in Plate XIII. 1 is the armature of a small 4-volt electromotor

Digitized by Google

which rotates in the field of the permanent magnet 2. A worm on the axis of the armature runs in the teeth of wheel 3, on the axis of which is a pinion that drives the wheel 4, the latter making about 1 revolution per minute.

Sliding on the fixed axis of 4, and turning on it (because of the guiding rods fixed to 4 and to a disc hidden by 5), is a sleeve which carries two excentric cams 5 and 17 and a portion of a brass cylinder 6, which has a circular arc of 240° at its end next 5 and tapers to zero at its end next the uncut wheel with rounded edge 7. These pieces, 5, 17, 6, and 7, all revolve together on the axis of wheel 4, but their position on the shaft may be anywhere between that shown on the photograph to that when 7 would be close alongside 4, the position along the axis being defined by the tooth of rack 8 in which the cam 5 happens to be engaged.

9 is the point of suspension of a coil of insulated wire, which, on the principle of a d'Arsonval galvanometer, hangs by a flattened phosphor-bronze strip in the field of the powerful permanent magnet 10.

15 is a tube which protects an aluminium wire that is attached to the suspended coil. When no current passes through the coil the suspension of the coil is adjusted so that the aluminium wire hangs, at rest, coaxial with the tube. When the coil is connected in circuit with what is usually represented diagrammatically as the diagonal of the bridge (see p. 26), then if the temperature of the air about the bridge is above that at which the bridge is balanced, the end of the aluminium arm next to 14 will move to the right of the line 14, but if below that temperature the aluminium arm will move to the left of 14.

Now the ebonite piece, whose edge is marked 14, is at the end of an arm which is attached to an axis at 13, and to the same axis is attached at 11 the arm whose platinum-tipped end is at 12.

The rack or comb 8, already mentioned, is attached to the arm 13, 14.

It will now be obvious that when the cam 5 revolves it will lift the comb 8 at each revolution, and with it the end 14 of the arm 13, 14.

Let us now suppose the apparatus to start from the position of rest shown in Plate XIII., and that the cam 5, the portion of brass cylinder 6, and the wheel 7 all rotate together in the direction indicated by the arrow-head. Then, when the rack begins no longer to press on the largest diameter of the cam 5, the piece 14 will begin to descend, and, if it is not interrupted by the end of the aluminium arm of the galvanometer, it will continue to descend until it comes to rest on the point of the screw 16. At the same time the platinum-tipped end 12 of the bar 11 will also descend. When the edge of the periphery of 6 comes round it will slightly raise 12, and then an electric circuit is completed which includes a 50-volt accumulator battery and the heating coils inside the spectroscope cover. The duration of the contact will depend on the position of the moving piece 5, 6, 7 on the axis. If 7 is moved close up to 4 the duration of contact would be 40^s in each minute, if in the position shown in Plate XIII. it would only be 2 or 3 seconds.

But if the air inside the spectroscope cover is above the normal temperature (*i.e.* the temperature at which the bridge is balanced) the end of the aluminium arm of the galvanometer will have moved to the right and will intercept the fall of 14, so that 12 cannot descend far enough to make contact with 6, and so no current can flow through 12 to the heating coils.

This action alone, if the contacts were long enough, would ensure a fairly constant temperature, but it would demand that the increments of temperature should always be much greater than the loss of heat in one minute.

Mr Darwin aimed at supplying automatically, as exactly as possible, the required increment.

For this purpose he devised the beautiful plan by which the partial brass cylinder 6, on which the point 12 makes contact, shall be automatically moved along its axis so that, when the galvanometer allows two successive increments of heat in two successive minutes, the second increment shall be greater than the first. On the other hand, when no increment of heat is required in any one minute the next heat increment shall be smaller than its predecessor. The instrument thus adjusts itself so that "heating" and "no heating" occur nearly alternately in alternate minutes.

That is the reason why the partial cylinder 6 is of the peculiar shape already described—so that, when it is moved along its axis till the wheel 7 is close to 4, the point 12 could be in contact with its periphery for 40 seconds in each minute, and when moved as far as possible from 4 the contact would last only 2 or 3 seconds.

The method by which this shifting is effected is as follows :—The rim 5 of the cam is not at right angles to the axis, but is part of a *left-hand screw* such that during its engagement with a tooth of the fixed rack 8 it forces 6 to slide the distance of one tooth space away from 4. If the aluminium rod of the galvanometer is not in the way, 14 will then drop on the end of screw 16 and the cam of smaller radius 17 will engage a tooth of the rack. The edge of this cam is of the form of a *right-hand screw* which, in course of its engagement with a tooth of the rack, forces 6 to slide a distance of two teeth of the rack towards 4, the sum of the two shiftings being a movement of 6 along a distance equal to one tooth interval towards 4.

Digitized by Google

But if the aluminium rod of the galvanometer arrests the fall of 14, the rack does not descend far enough to allow it to engage on 17, and so the original motion of 6—one tooth away from 4—remains.

In addition to these intermittent increments of heat there is a shunt-current allowed to flow constantly through the heating coils, and the amount of this shunt-current is also automatically regulated.

The uncut wheel 7 with its rounded edges has continually pressing upon it one of five brass plates which are mounted side by side (with a very short interval between them) upon a bar of vulcanite 18. This bar is mounted on a pivoted frame, shown in the plate, so that one of the insulated brass plates always presses on the wheel with the resultant weight of the pivoted frame.

Each of the brass plates is connected by a separate (insulated) wire through a resistance with the heating circuit, except that the current may pass from the plate next to 4 without resistance. The next plate has an interposed resistance of 10 ohms, the next 20, the next 60, and the last 120 ohms.

Thus, if the machine is started when the spectroscope is cold, there will be, so soon as 7 has worked up close to 4, a constant 50-volt current flowing through the heating coils without sensible external resistance. As the temperature of the air about the prism-box rises approximately to the normal—that is, so soon as 14 is occasionally stopped in its descent by the aluminium arm—the wheel 7 becomes gradually drawn along away from 4, the shunt is connected with higher and higher resistance, and the "heating" and "no heating," by the contact 12, become more nearly alternate.

Plate XIV. shows the covered prism-box, the outer aluminium cover being removed. 19 is the armature and 20 the permanent magnet of a 4-volt electro-motor which drives an aluminium fan drawing air downwards through the tube 21. The action of this fan thus diminishes the air-pressure in the lower half of the body of the spectroscope. The air accordingly enters from the aluminium enclosed space alongside the camera tube, as indicated by the arrow, passes through the enclosure 37, Plate VI., over the top of the aluminium partition 54 (shown by a dotted line in Plate VI.), returning to the aluminium enclosure by the tube 21, Plate XIV. This tube 21 is, in reality, extended past the prism-box, but the extension was removed temporarily before the photograph was taken to allow the motor to be seen. The Wheatstone bridge is mounted at the outlet of the extension tube, in the draught produced by action of the fan.

The slit 34, Plates V. and XIV., which gives access to the means of clamping the collimator object-glass at focus, can be closed so as to intensify the draught alongside the tube of the camera telescope.

The heating coils are arranged around the inside wall of the aluminium enclosure, but not against the doors 38 and 39. Each coil is parallel to the axis of the telescope, and extends nearly the whole length of the enclosure. There are twenty-four coils in all, joined in two groups of twelve coils in parallel. These groups are then joined in series, their total resistance being then 20 ohms. The coils are each completely shielded from direct radiation on the large tube which encloses the Wheatstone bridge, and through which the blast of air from the fan passes.

THE CALLENDAR RECORDER.

Inside the prism-box are the copper coils of another Wheatstone bridge which is connected with the Callendar recorder. This recorder automatically and continuously registers the temperature inside the prism-box.

What is requisite in refined spectroscopy is not only that the temperature of the prisms and the various parts of the spectroscope shall be uniform during exposure, but that the temperature of the prisms for at least eight hours before the exposure should be constant. The Cape prisms are 2·25 inches in height, and thus, on account of the low conductivity of glass for heat, the temperature of the thicker and thinner parts of the prism and of the exterior and interior parts of the prism are apt to differ unless the above condition is fulfilled. Hence the value of the record given by the Callendar recorder.

These records show that with the appliances above described the temperature of the prism-box can be maintained within $\pm 0^{\circ}\cdot 10$ F. for days together.

The Callendar recorder is now a regular article of manufacture by the Cambridge Scientific Instrument Company, and need not be here described in detail.

Plate XV. is from a photograph of the south end of the Instrument Room.

I., Plate XV., is the Callendar recorder.
II., ,, ,, the 4-volt switch-board.
III., ,, ,, the 50-volt switch-board.
IV., ,, ,, the thermostat.

Digitized by Google

V., Plate XV., is a resistance for regulating the difference of potential between the terminals of the heating coils; when the cells are being charged the E.M.F. of the cells rises.

VI., ,, are the resistances connected with the frame 18, Plate XIII.; these stand on a condenser which is used to reduce the spark when the point 12 breaks contact with 6.

The switches, etc., on the switch-board are:—

On II. (the 4-volt switch-board):

1. Main fuse +.
2. Distributing box.
3. Main fuse −.
4. Switch of thermostat motor.
5. Voltmeter switch.
6. Control bridge switch +.
7. Fan switch.
8. Recorder bridge switch +.
9. Recorder break-switch.
10. The voltmeter (0 to 5 volts).

On III. (the 50-volt switch-board):

11. The main fuse +.
12. Main fuse −.
13. *Switch to illuminate fork of recorder.
14. Voltmeter switch.
15. Heating coils +.
16. Heating coils −.
17. *Switch to illuminate galvanometer scale.
18. †Spare terminal switch.
19. The voltmeter (10 to 60 volts).

MISCELLANEOUS ADJUNCTS OF THE TELESCOPE IN USE DURING SPECTROSCOPIC WORK—AS SHOWN IN PLATES VI. AND VII.

55*a*, Plate VI., is the distributing box for the 6-volt circuit employed for illuminating the Declination Circle, the red light field of the finder, the guiding (8-inch) telescope, the Repsold micrometer, and the various lamps of the spectroscope.

56 is the finder.

57, Plate VII., is the axis of the balanced interior shutter for exposing the slit or the photographic plate.

59 and 60, Plate VII., are compressible carbonised cloth resistances for regulating the illumination of the webs of the guiding telescope and the scales of its eye-end.

61, Plate VII., is the eye-end of the guiding telescope, precisely similar in construction to that of the 13-inch astrographic telescope, but of twice the scale; it need not therefore be further described.

62, Plate VII., is a convenient handle for moving the telescope.

63, Plate VI., is the reader of the Declination Circle.

64, Plate VI., is the Repsold micrometer applied to the 18-inch telescope; a full description of this instrument will be found in vol. xvi. of the *Encyclopædia Britannica*, pp. 246, 247.

65 is the flexible cable of twelve strands which conveys to the spectroscope the 4-volt currents required for the Wheatstone bridges, and for actuating the fan-motor, and the 50-volt current required for the heating coils. All these wires connect to a plate with insulated connections, and the latter attaches by a bayonet joint to a corresponding plate on the lower end of the aluminium cover, whence the connections are continued to terminals in the interior of the enclosure.

66 is a strong teak table mounted on castors which carries on its top an 18-inch spark induction coil, by Apps, an ammeter and a voltmeter, and beneath a large condenser by Harvey & Peak containing sixteen sheets of glass on which sheets of tinfoil 28 × 15 inches are mounted, of which any number from two to sixteen can be inserted in the secondary circuit, also a regulating spark gap, and a self-induction coil that can be used in the secondary circuit. The use of this secondary circuit gets rid of the air lines in the iron spectrum of comparison.

Eleven accumulator cells are used in connection with this coil, and convenient terminals (connected by underground wires to the building, and thence by thick flexible wires to the rising floor) are provided. These terminals are attached to the posts of the rail that surrounds the aperture in the floor, both on the east and west side of the telescope pier, so that the wires connecting them with 66 need never be in the way of the observer.

67, Plate VI., is a double key connected with the magnets of the "sun and planet" wheels of the motion in

* The small lamp controlled by 13 illuminates the fork at the end of the boom of the recorder, so that its position relative to the revolving wheel with which it makes contact can be viewed by a mirror. The 6-volt lamp is in series with the 50-volt lamp which illuminates the scale of the Thomson "air dead-beat galvanometer," which is permanently mounted, ready for determining resistances. Switch 17 must therefore also be turned on when 13 is used.

† The spare terminals are convenient for miscellaneous use; they are seen at 20 on the left-hand side of Plate XV.

Digitized by Google

Right Ascension. By pressing one of these the rate of the driving screw is accelerated 3%, and by pressing the other key it is retarded 3%. The details of this "sun and planet" gear are described by Sir Howard Grubb (*Monthly Notices, R.A.S.*, vol. xlviii. pp. 353 and 354).

By shifting another key, not seen, these keys can be connected with Grubb's "quick-slow motion," by which a motion can be communicated which is about of the same rate as the diurnal motion, and which serves, after the telescope has been clamped approximately in R.A., to bring the star rapidly on the slit.

The slower "slow motion" is used for traversing the star backwards and forwards along the slit to give width to the spectrum, or to keep the image of the guiding star upon the cross wires of the guiding telescope in the ordinary photography of celestial objects.

THE OBJECT-GLASSES.

The objectives hitherto employed in the spectroscope were made by John A. Brashear Company, Limited, of Allegheny, Pa., who kindly supply the following information :—

Collimator.—Cemented doublet. Aperture 2·4 inches. Focal length 22·5 inches. Flint lens in front.

R1 + 12·01 inches.	} Flint 0·15 inch thick in centre.	
R2 − 5·65 „		
R3 + 5·65 „	} Crown 0·25 „ „	
R4 + 44·46 „		

Long Focus Camera.—Cemented doublet. Clear aperture 2·66 inches. Focal length 30 inches. Flint lens in front.

R1 + 19·30 inches.	} Flint 0·15 inch thick in centre.	
R2 − 9·08 „		
R3 + 9·08 „	} Crown 0·25 „ „	
R4 + 70·30 „		

Short Focus Camera.—Composed of two light flints and ordinary crown. Clear aperture 2·4 inches. Focal length 16 inches.

R1 + 8·80 inches.	
R2 − 4·19 „	
R3 + 4·19 „	
R4 + 6·56 „	
R5 − 6·56 „	
R6 + 24·20 „	

All give excellent definition, but it is necessary to incline the plate to get the best definition from H_β to H_δ. The achromatism is adjusted for minimum focus at H_γ.

But it seems to be impossible with such lenses to get perfect coincidence of the lines over the whole range of the spectrum photographed when tested by Newall's method, owing to the imperfect achromatism and correction of spherical aberration for all rays inherent to the glass employed. When two adjoining spectra are photographed, one through the thicker, the other through the thinner half of the prisms, it is easy, by varying the focal adjustments and the tilt of the dark slide, to get perfect coincidence of the lines of the two spectra at any desired part of the spectrum or at two points of the spectrum, but impossible to do so from H_β to H_δ—much less for greater range of the short-camera telescope.

We have thus been in the habit of adjusting the focus for those parts of the spectrum of a particular star which are most suitable for accurate determination of velocity in the line of sight, and confining the measurements to that range of the spectrum within which the lines of spectra taken through the thick and thin parts of the prism are coincident. We are now endeavouring to obtain more perfect lenses, but as yet without success.

Digitized by Google

THE PRISMS OF THE SPECTROSCOPE.

The four prisms now in use were made by Hilger of London from glass made by Chance Bros. Each prism is $2\frac{1}{4}$ inches in height, their faces of the following lengths :—

Prisms	1	2	3	4	
	3·7	3·9	4·1	4·4	inches

Messrs Chance have supplied the following particulars of the light flint of which the prisms were made. Two were from the first melting, two from the second.

No. of Melting.	Ref. Index for D.	Medium Dispersion C-F.	$V=\frac{n-1}{\Delta n}$	Partial Dispersion.		
				C-D.	D-F.	F-G.
251	1·5753	0·01398	41·2	0·00401	0·00997	0·00838
287	1·5746	·01396	41·2	·00404	·00992	·00816

Hilger supplies the following particulars as to the deviation of the prisms :—

Prism	1, ...	45°	0′	15″
,,	2, ...	45	1	15
,,	3, ...	45	1	45
,,	4, ...	45	0	40
Total deviation	. . . . .	180°	3′	55″ for $\lambda = 4340$.

The glass is very transparent and free from striæ and bubbles; the annealing appears to be nearly perfect.

Digitized by Google

THE OBJECT-GLASS PRISMS.

THE Victoria Telescope, as originally constructed, was provided by Mr M'Clean with an object-glass prism of 24-inches aperture, made by Sir Howard Grubb, having a refracting angle of 8°. The mode of mounting this prism is figured in Part I., Plate X., and described at p. 12 in connection with the mounting of the Victoria Telescope. When experiment showed that the dispersion of this prism was insufficient to distinguish between the spectra of the Helium

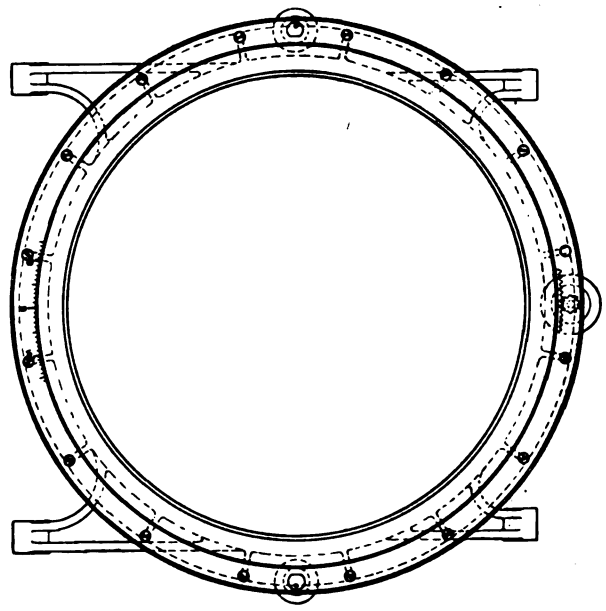

FIG. 17.

stars and those of other stars of Type I., Mr M'Clean provided for the construction of an additional object-glass prism having the largest refracting angle that Messrs Zeiss would undertake to make with an aperture of 24 inches.

The outcome of this generosity was a splendid prism having a refracting angle of 12°.

The mode of mounting this prism is shown in fig. 17, and it will be seen that either the 12° prism alone, or the 8° and 12° prisms together, can be used at pleasure.

The exclusive devotion of the telescope to researches on radial velocity has hitherto prevented the practical employment of these prisms in astronomical research.

Digitized by Google

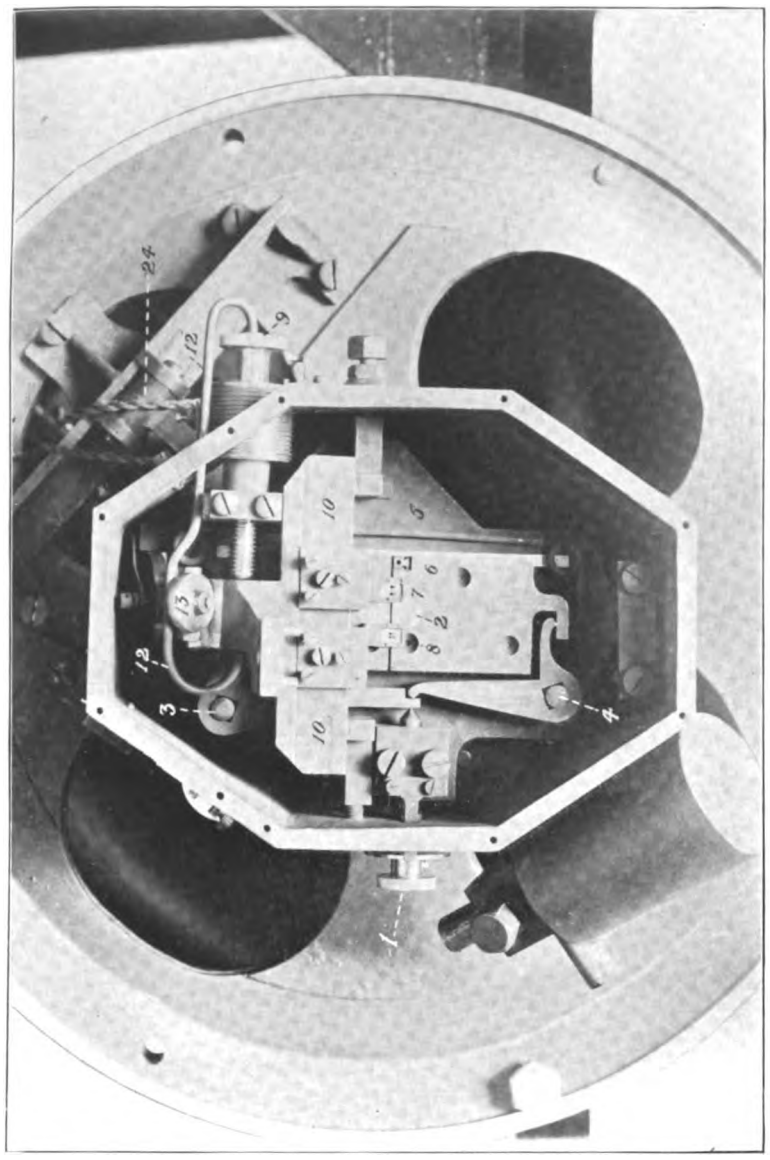

PLATE I.

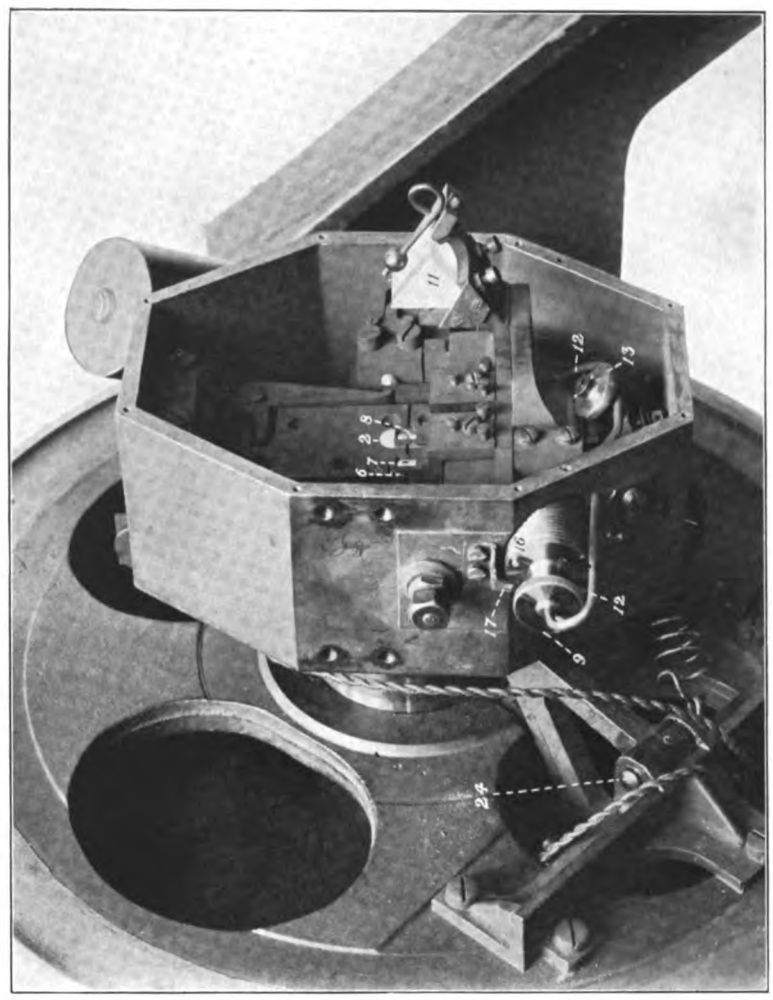

PLATE II.

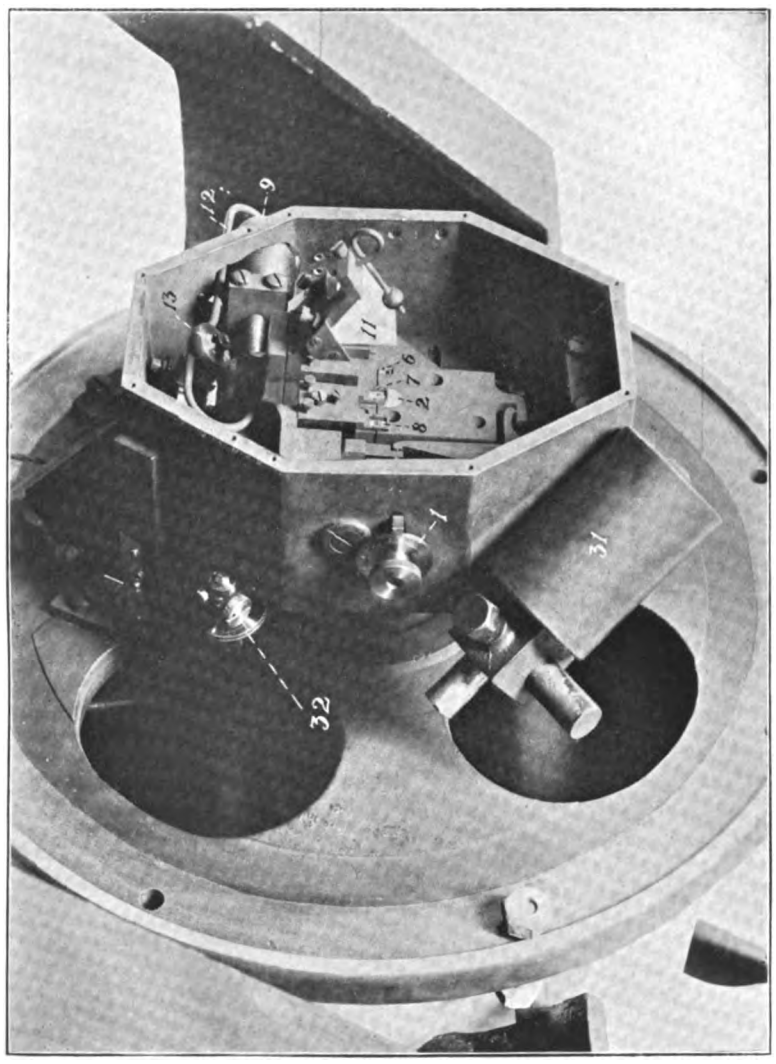

PLATE III.

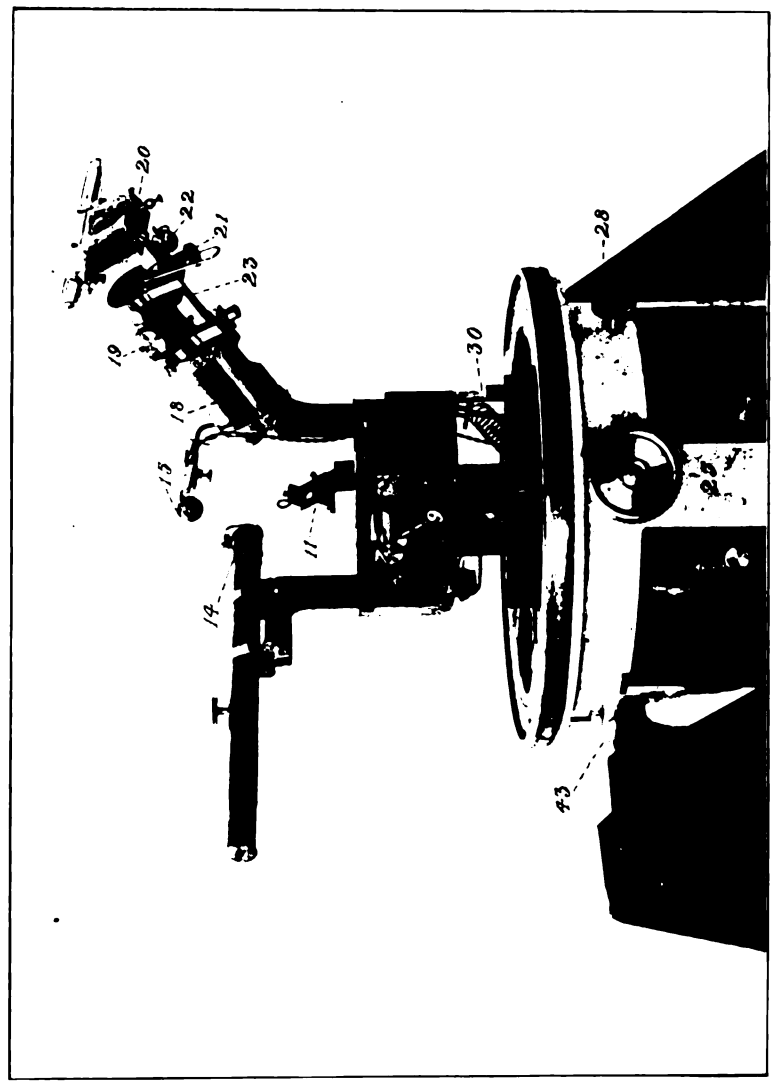

PLATE IV.

Digitized by Google

Digitized by Google

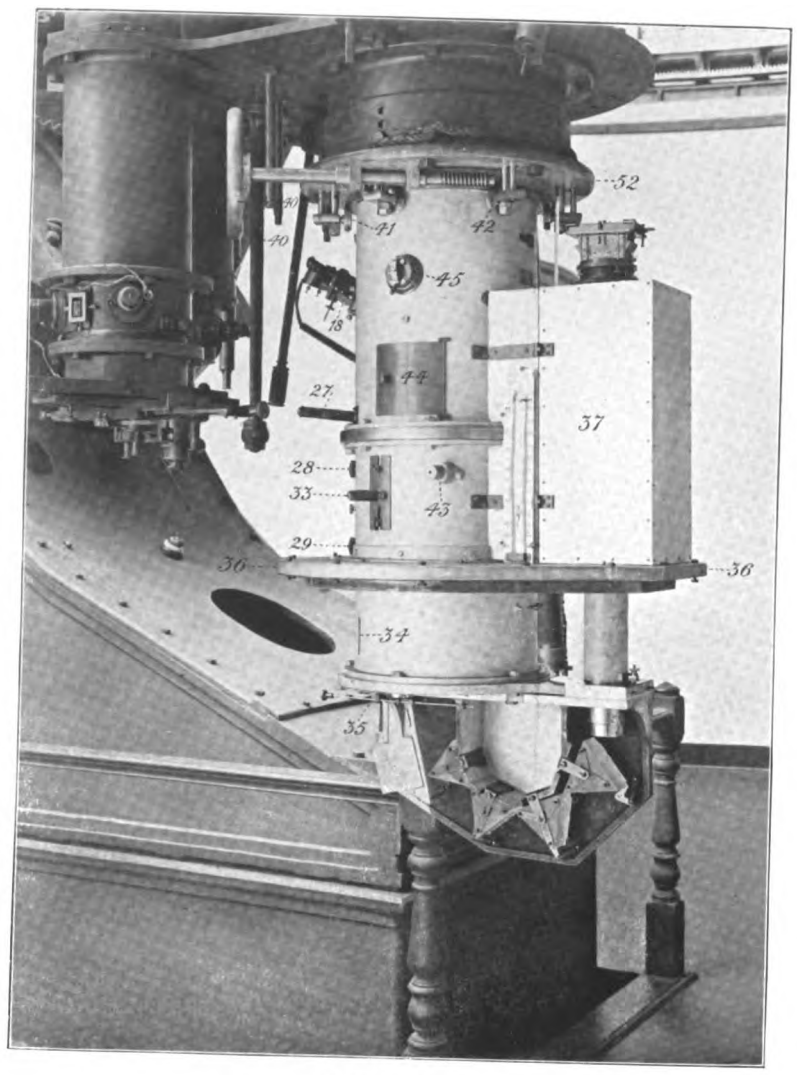

PLATE V.

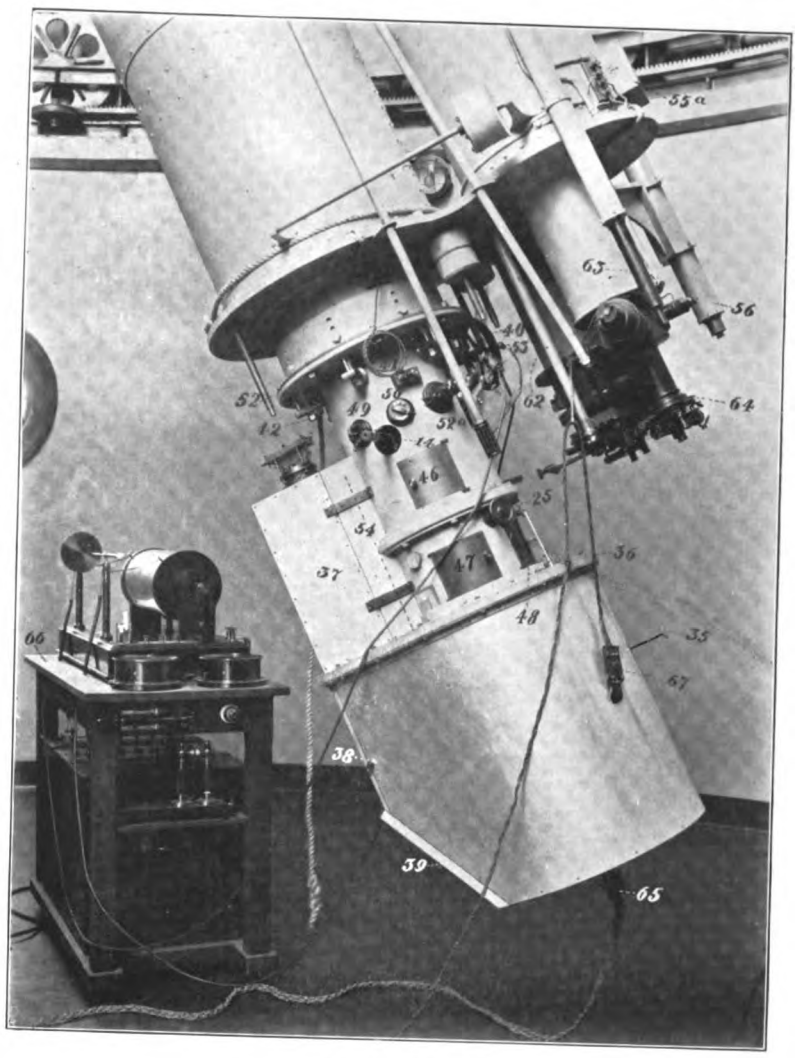

PLATE VI.

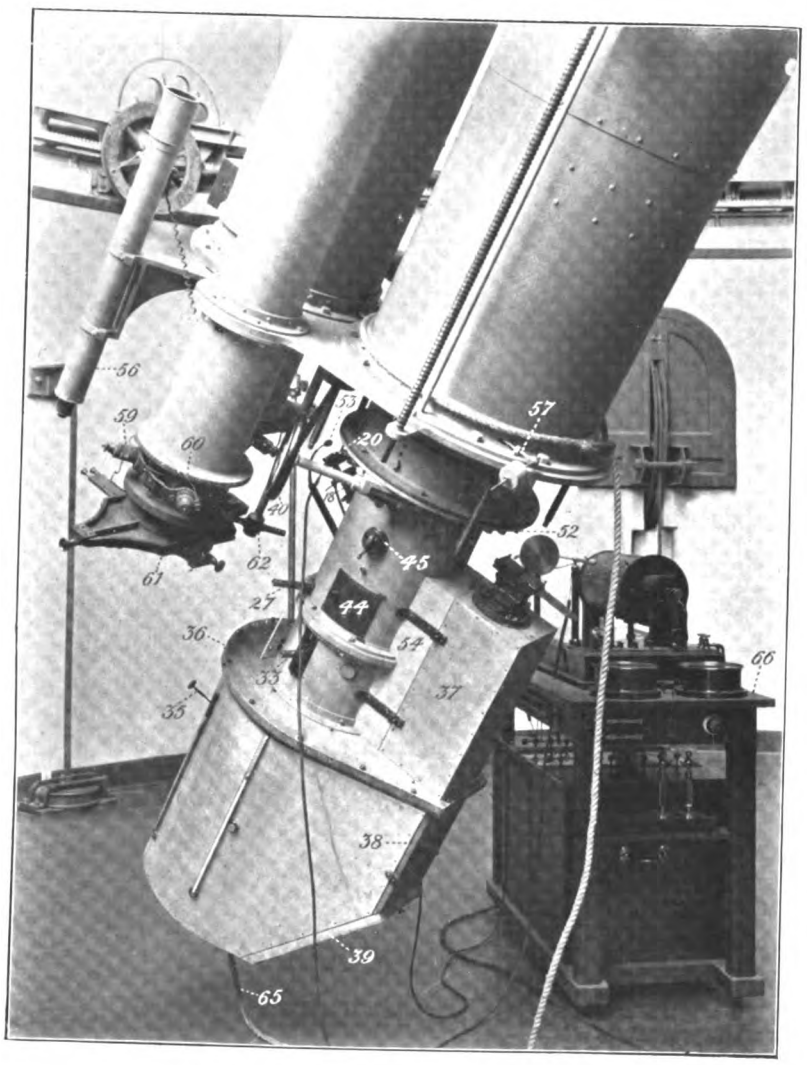

PLATE VII.

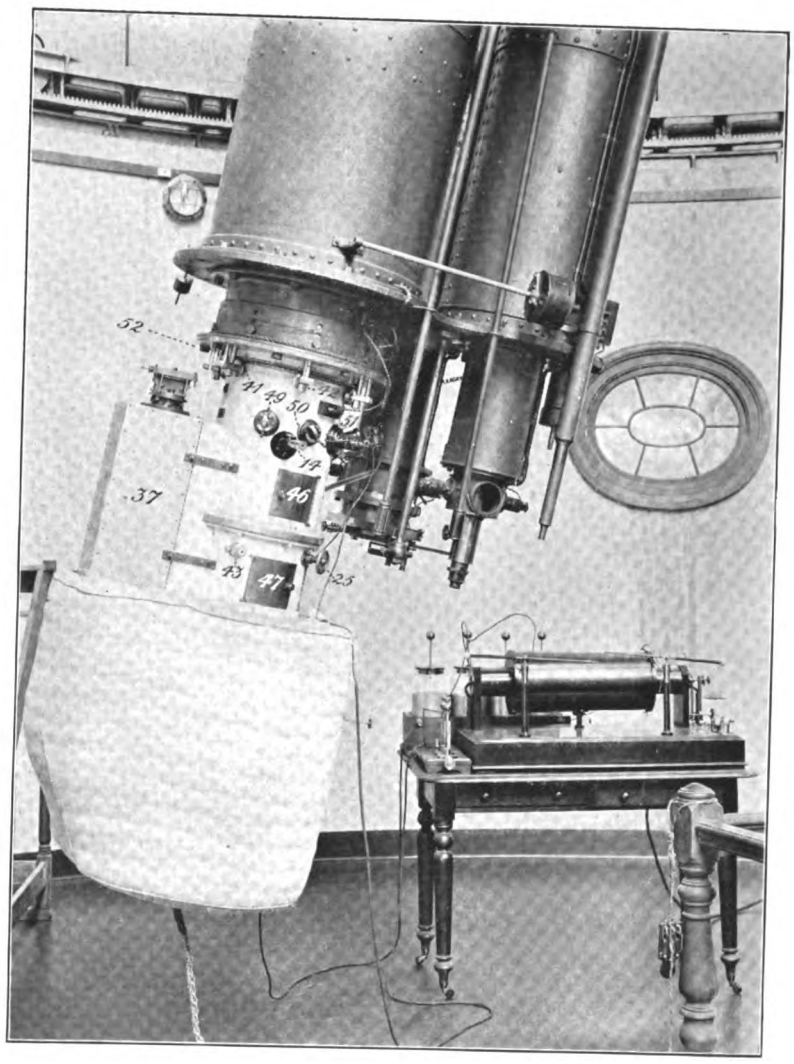

PLATE VIII.

Digitized by Google

Digitized by Google

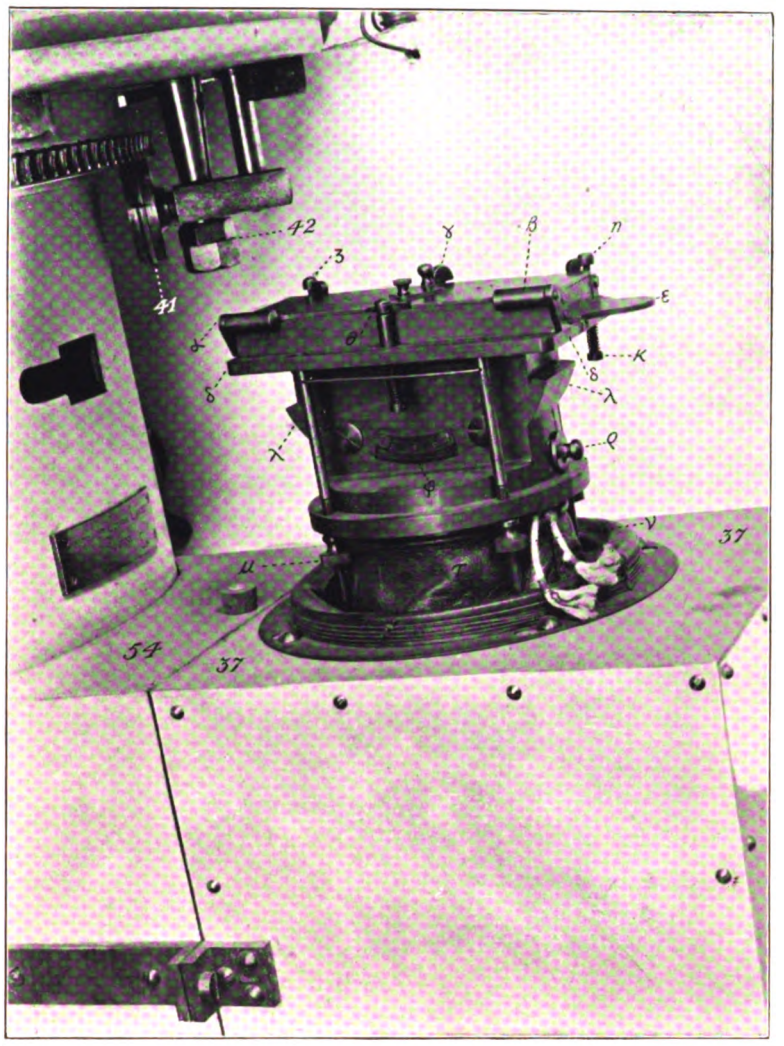

PLATE IX.

PLATE X.

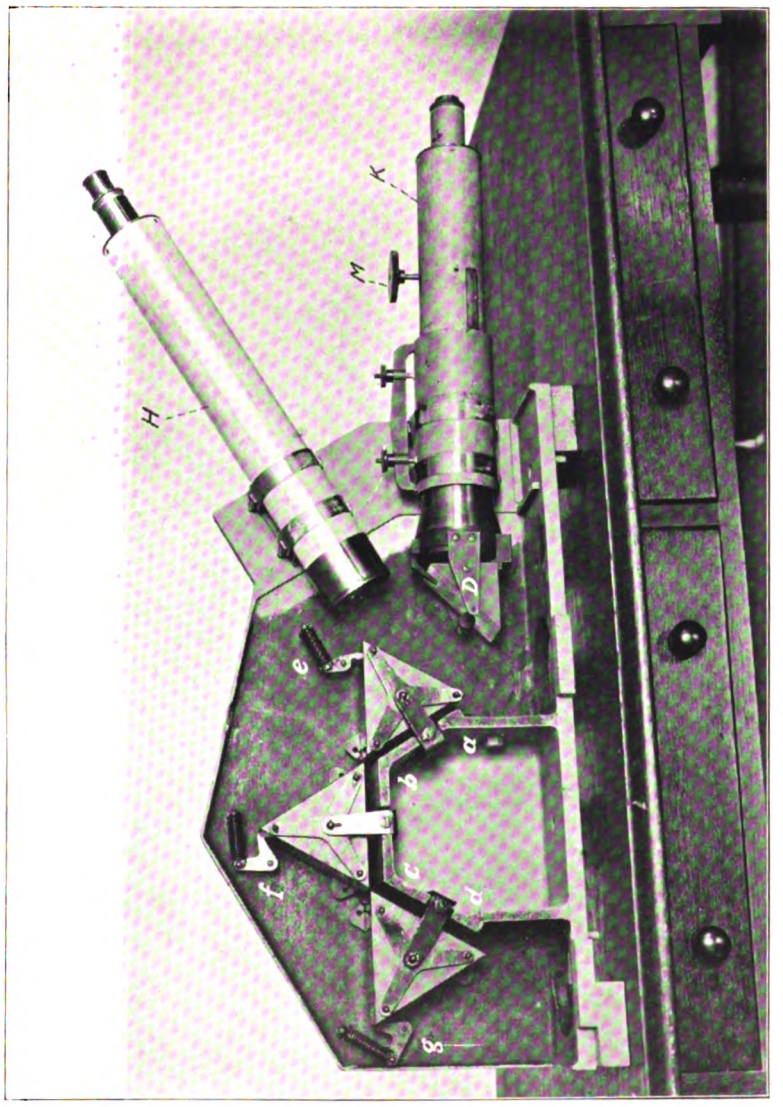

PLATE XI.

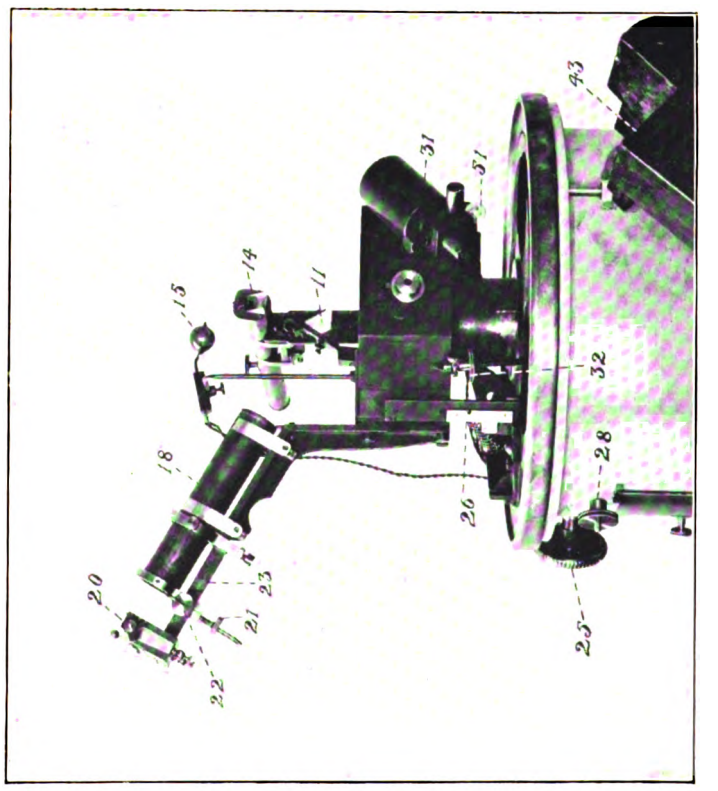

PLATE XII.

Digitized by Google

Digitized by Google

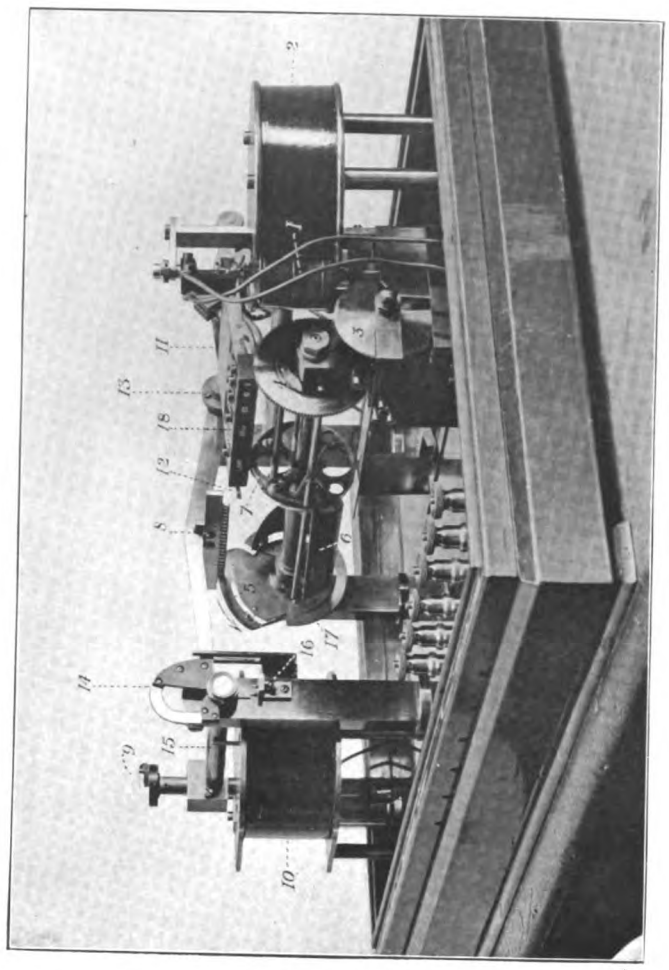

PLATE XIII.

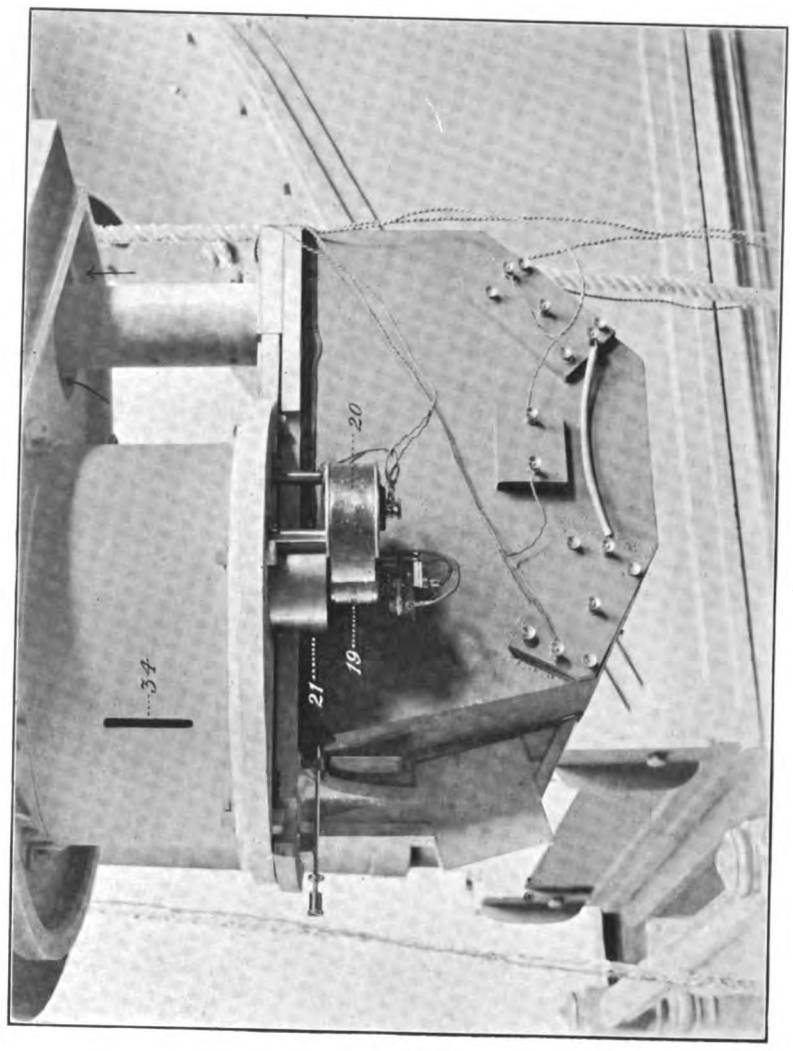

PLATE XIV.

PLATE XV.

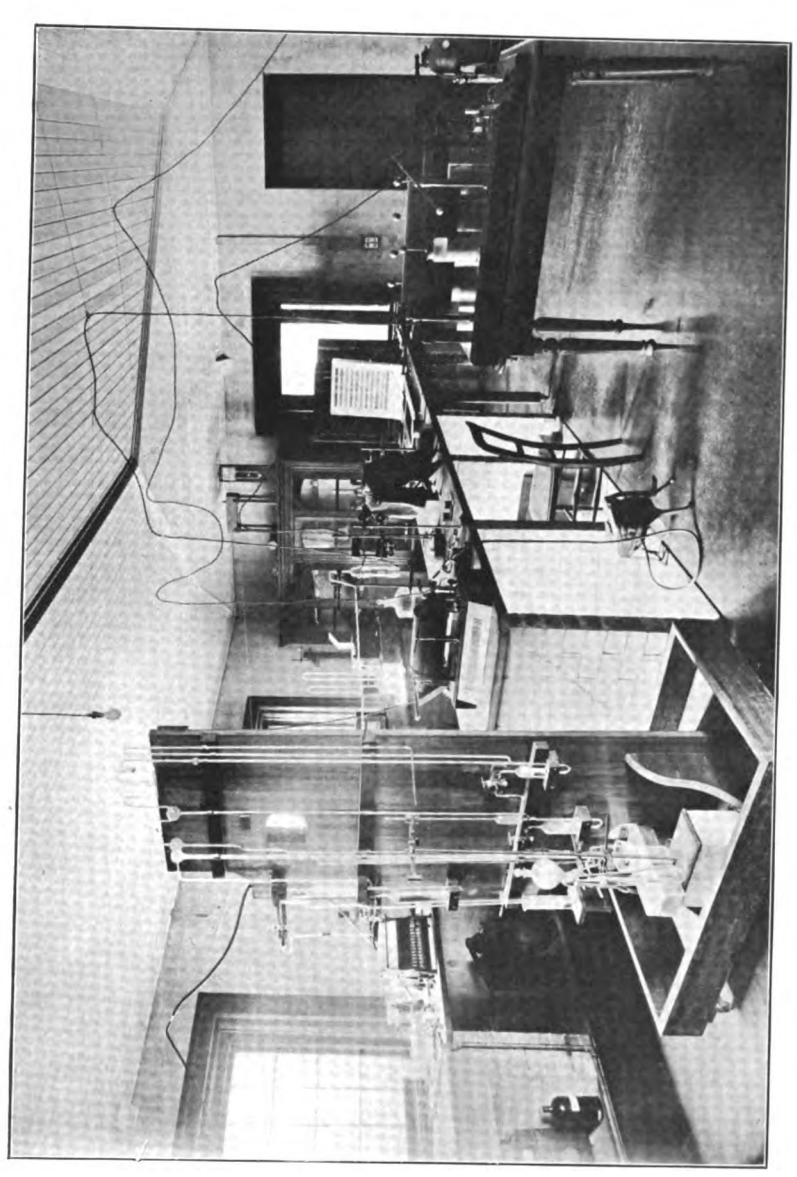

PLATE XVI.

Digitized by Google

Digitized by Google

PART III.

THE REVERSIBLE TRANSIT CIRCLE.

Digitized by Google

PART III.

THE REVERSIBLE TRANSIT CIRCLE.

Soon after my appointment to the Cape in 1879 I drew the attention of the Lords Commissioners of the Admiralty to the fact that there existed at the Cape no refined means for fundamental Meridian observation.

The Cape Transit Circle could neither be reversed on its bearings nor could its object-glass and eye-end be interchanged, and therefore it was impossible to introduce into the fundamental work of the Observatory those instrumental conditions of symmetry in use which are essential for the elimination of a certain class of possible systematic errors. I also endeavoured to show that a meridian instrument which is placed in an observatory where it is impossible to equalise the internal with the external temperature, could not be relied upon for the determination of fundamental Declinations, on account of the abnormal refraction introduced by the conditions of the installation.

These views, however, were not accepted for many years, and it was not until 1897 that estimates for the construction of a new Transit Circle and observatory were sanctioned.

Specifications were at once prepared, both for the Transit Circle and its observatory.

The general ideas embodied in the design of the Transit Circle were :—

1. As far as possible all parts of the instrument were to be of cast iron or steel, so that, for example, a minimum of change in Collimation or in Nadir should result from a difference between the coefficients of expansion of the micrometer screws and the boxes in which they are mounted.

2. The piers to be hollow boxes of cast iron, united by a common iron foundation, so that, when the distance between the two graduated circles is changed by rise or fall in the temperature of the axis, the microscopes reading both circles should still continue in focus.

3. The piers should be lined externally with a thick coating of some substance as nearly as possible a non-conductor of heat, in order to protect them from local radiation of heat from the observer's body. They should also be filled with water, so as not only to cause the change of temperature of the piers to be very slow, but to insure the further condition that the temperature (if not necessarily identical at the top and bottom of each pier) will be uniform throughout any horizontal section of the pier, because the water will tend to arrange itself in horizontal layers of equal temperature. This latter condition will prevent twisting or bending of the pier as the results of difference of temperature in different parts of the pier.

4. Similarly, to protect the iron hollow cones (which form the tube of the telescope) from local heating, they were to be surrounded by double conical envelopes of sheet copper, attached only at the base of each conical iron tube. This outer envelope, if locally heated by radiation from the observer's body (as, for example, in the determination of the Nadir point) would be heated on one side only; but, by its high conductivity, the copper envelope would begin to distribute the heat, and at the same time would set up a current of air between the two copper envelopes so that only a very small proportion of the original heat would reach the inner envelope; this inner envelope would, in a similar way, distribute the residual heat and set up a similar protective current of air between it and the iron conical tube.

5. The circles, 30 inches in diameter, to be solid discs of cast iron, without the usual radial arms, the graduations to be made upon an inlaid band of iridio-platinum (30 per cent. iridium and 70 per cent. platinum). The cost of this alloy was, however, found to be so great—viz. £60 per circle—that it was finally determined to employ

Digitized by Google

it for one of the circles only (the fixed circle) and to use silver in case of the movable circle. The iridio-platinum alloy was selected because of its hardness, permanence, and capacity for taking fine divisions, and also because of the near equality of its coefficient of expansion by heat to that of iron. In the case of the movable circle, the difference between the coefficients of expansion of iron and silver, as has been pointed out by Bigourdan (*Comptes Rendus*, 26th Sept. 1904), might create change in the division error, if the elasticity of the silver band is insufficient to yield to the changes in the dimension of the iron in which the silver is imbedded. But as the fixed circle alone is generally used in regular observation, and the movable circle for investigations connected with division error of the fixed circle, it is extremely unlikely that any change of division error in the movable circle would take place during the period occupied by a special investigation. In fact, the agreement between the results given by the two circles, after correction of the division error of each, is so complete as to show that, for the present, at least, no such changes as M. Bigourdan fears have actually occurred.*

6. The circles to be protected from local heating by copper discs, which might be expected to distribute the heat on the same principle as the copper envelopes of the tube. These discs to be each further enclosed with an outer copper enclosure, the microscopes reading the circles through holes in the latter.

7. Each circle to be read by six fixed microscopes. Four subsidiary microscopes are also to be provided, situated at diameters 20° and 25° from one pair of opposite fixed microscopes, so as to allow the rigorous subdivision of the circle into 5° spaces, on the plan of the old transit circles at Greenwich and the Cape. Two subsidiary microscopes with divided object-glasses are also to be provided, suitable for subdivision of the 5° spaces into single degrees. These six subsidiary microscopes to be interchangeable for use with either circle.

8. The tubes of the microscopes to be of steel, passing through steel tubes in the cast-iron upper part of the pier. The space surrounding the steel tubes through which the microscopes pass to be filled with water.

9. The illumination of the graduated part of the circle opposite each microscope to be light from a small incandescent electric lamp reflected upon the circle, symmetrically with the axis of the microscope, from a dead white surface such as that of plaster of Paris.

10. The pivots to be of flint-hard steel and to rest upon V-shaped bearings (having slightly rounded surfaces) presenting only very narrow lines of contact to the pivots—and not upon long bearings, which must introduce great uncertainty, as the slightest change in level of the axis must in that case cause the pivot to bear sometimes near one, sometimes near the other end of itself.

11. The pivots to be perforated and to carry at one end an object-glass having a focal length slightly greater than the length of the axis, and at the other end, in the principal focus of this object-glass, a circular dot mounted on a transparent plate, capable of being centred to approximate coincidence with the axis of rotation of the horizontal collimator so formed.

12. A telescope, fitted with an accurate micrometer, that can be attached to either pier, for measuring the co-ordinates of the dot as viewed through the object-glass mounted on one of the pivots, when the axis is rotated, and so to determine the effect of errors of the pivots upon the azimuth and level of the axis.

13. The object-glass of the Transit Circle to be 6 inches in diameter and 8 feet focal length.

14. The eye-end, like the rest of the instrument, to be of cast iron and steel. The Declination micrometer to be provided with a type-wheel and means for embossing the reading of the head on a tape, as in the micrometer of the Repsold heliometer (*Cape Annals*, vol. vii. p. 22, fig. 8). The micrometer frame and tube to be cast in one piece.

15. The object-glass and eye-end to be interchangeable.

16. The collimators to be of the same aperture and focal length as the object-glass of the Transit Circle.

17. Means to be provided for micrometrical rotation of the collimators upon their axes, in order to provide a simple and accurate method for determining the inclination of the Declination wire of the Transit Circle.

18. Lenses of about 290 and 240 feet focal length to be provided for viewing the Meridian marks.

19. A convenient apparatus to be supplied for reversing the instrument, which can also be employed as a stand for the observer in making observations of the Nadir point.

20. The illumination of the field to be from light coming through the axis of the pivot, thence reflected to a mirror in the centre of the object-glass, and thence to the field.

* Had one known at the time that nickel-steel was capable of taking a black polish and fine graduation with little liability to rust, it might have been preferable to use that material for the circles, so that the graduation could be made upon the same material as the circle itself. There would, however, remain the objection that the coefficient of expansion of the circle, where it fits on the axis, would be different from that of the axis itself. Perhaps, in future, transit circles may be made entirely of nickel-steel.

Digitized by Google

THE OBSERVATORY.

The moving part of the observatory to be constructed of angle- and sheet-steel. The walls to form a rectangle, in plan measuring 20 feet east to west and 20 feet north to south (inside measurement). The roof to be semi-cylindrical in shape, the axis of the cylinder coinciding with that of the Transit Circle. The whole observatory to roll apart into two halves symmetrically with the Meridian of the instrument, leaving an observing aperture 6 feet in width.

The floor of the observatory to be of iron plate (engine-room flooring) carried on a framework, suitable also for carrying the rails on which the superstructure rolls, the rails for the observing chair, and the rails for the aftermentioned inner covering for protecting the instrument from dust.

The whole frame carrying the floor and superstructure to be supported by suitable cast-iron pillars to a height of 3 feet above the ground, so as to allow a free current of air beneath the building.

The structure of the observatory to have triple sides of thin steel, and to be open at the bottom so as to form a double series of ventilating shafts to carry off, by convection currents, all heated air arising from the effects of sunshine on the external cover. All convection currents of air to be carried to suitable chimneys on the east and west ends of the building, and therefore removed as far as possible from the 6-feet observing opening.

Sheet-iron wind-screens, 7 feet in height, to surround the whole building internally, to protect the observer from strong wind; but providing an opening at pleasure, 3 feet in width, to permit observation of the collimators and Meridian marks. Insulated pillars to be attached to the masonry pier on which the instrument stands to support the rails which carry the travelling mercury tray for observing stars by reflection.

The construction of the mechanical parts of the Transit Circle was entrusted to Messrs Troughton & Simms of Charlton, that of the observatory and the object-glasses to Messrs T. Cooke & Sons of York.

After much personal discussion, and later by correspondence, the working plans were arranged.

It was not until April 1900 that the observatory reached the Cape, and it was erected in course of that year.

The Transit Circle was inspected in Messrs Troughton & Simms' workshops by H.M. Astronomer in 1900, and it reached the Cape in April 1901. Little time was lost in mounting it, but great difficulties were encountered before the instrument could be brought into working order.

The most serious of these was in connection with the geological conditions of the site.

In sinking the pier for the Transit Circle itself on the only suitable site on the observatory grounds, the upper underlying rock was found to be weathered to such an extent that at first it seemed as if no proper foundation could be reached without an excavation of such depth as would involve very serious expense. Even then, from the water-bearing character of the rock, it was probable that no advance in stability would be attained, as the action of water would probably induce changes in any pier that could be built.

After sinking to the depth of 16 feet, a block of concrete, 18×16 feet in plan and 8 feet thick, was cast *in situ*, and upon the foundation was erected a brick pier, finally capped by a rectangular pier built of dressed blocks of Table Mountain sandstone.

In order to exclude all water from the masonry of the pier, trenches were excavated completely surrounding the observatory to a depth of 10 feet. The bottom of the trench was graded and cemented so as to form a drain leading to a single end, and advantage was taken of the slope of the hill to introduce a pipe leading to an exit below the level of the bottom of the surrounding trench, in order to carry off any water that might percolate into the trench. As a still further precaution, the whole surface of the ground surrounding the observatory and collimator-houses was covered with concrete, having a waterproof cemented surface sloped so as to carry off all surface-water to proper drains.

In this way the mason work of the pier remains perfectly dry, and such changes as may arise in the Azimuth, Level, and Nadir of the instrument will chiefly depend upon changes due to disintegration or swelling of the rock produced by the action of water underneath the concrete foundation. Such changes would probably be of the character and order of those which we experienced with the old transit circle, which rests on a similar foundation, and of which an account by Mr W. H. Finlay will be found in the *Cape Annals*, vol. i. part v.

But, as already stated, the original design of the instrument provided that, in addition to the ordinary collimators there should be, mounted on the collimator piers, lenses of about 300 feet focal length, and in the principal foci of these lenses there should be marks attached to well-founded piers both to north and south of the instrument. These lenses and marks, if founded with sufficient stability, should serve as an Azimuth

Digitized by Google

reference of great permanence, and be used as a control on the Azimuth of the instrument from hour to hour, and perhaps for very much longer periods.

On sinking for foundations of the collimator piers, disintegrated rock, sufficient for the foundation of any ordinary building, was found at a very short distance below the surface, but even at 12 feet depth the rock was cracked and disintegrated to a degree that would have rendered it quite unsuitable for the refinements aimed at. Accordingly, a rock-boring apparatus was erected successively over the sites of the collimator piers and of the Meridian-mark pillars, and the bores were continued at each site until the cores, brought up by the diamond drill, showed that the unweathered rock of the Malmesbury beds had been reached.

The corresponding depths were :—

At south collimator pier, 30½ feet.	South Meridian mark, 24½ feet.
At north „ „ 34 „	North „ „ 16½ „

It is evident that if lenses and marks were erected on piers founded at such depths there would be great risk of changes in the piers themselves, apart entirely from the fact that a small angular tilt of the foundations of piers of such height would produce a considerable linear displacement of the lens or mark. Accordingly a plan was devised (which is subsequently described) by which the positions of marks attached to the solid rock below could be transferred vertically above ground level. But as the execution of this plan would involve considerable outlay of time and money, Professor Corstorphine, Director of the Geological Survey of the Cape Colony, was consulted as to the probable permanence of marks so founded. His report ran as follows :—

The site of the new Transit Circle house is, like the rest of the observatory grounds and the surrounding district, underlain by the oldest rocks of this part of South Africa—the slates and quartzites known as the Malmesbury Beds. These rocks form the whole south-western corner of the Cape Colony and extend over many hundred square miles of country. Up to the present no fossils have been discovered in any of the outcrops, so that the series cannot be correlated with any of the European formations. At the same time, there is no doubt that the old slates and quartzites were deposited at some period long anterior to the Devonian rocks of Europe. The so-called Bokkeveld Beds of the Cape Colony contain Devonian fossils. Between these beds and the tilted Malmesbury slates there are 4000 to 5000 feet of Table Mountain Sandstone, which is itself separated by a very marked unconformity from the old slate series. Such an unconformity means a long interval of time, and, combined with the presence of the 5000 feet of Table Mountain Sandstone, throws the Malmesbury Beds back to very early Palæozoic times.

In petrographical character the rocks resemble some of the Silurian slates and grits of the southern uplands of Scotland and, to a less extent, the Cambrian slates of South Wales. Although usually described as slates, the beds are all fairly quartzose, and in many instances "cleaved quartzite" is the most accurate petrographical description.

The whole series dips usually at a high angle and strikes in a general N.E.–S.W. direction. Its actual thickness cannot be measured, but it must extend to at least 10,000 feet.

Extensive granite intrusions occur in the slates, but the observatory lies three miles in a straight line from the nearest granite.

The various outcrops of the Malmesbury series show considerable variety in weathering. About a mile north of the observatory the hard rock is found practically at the surface; the test bore-holes put down in connection with the new Transit house struck the fresh rock at depths of nine, sixteen, and thirty feet respectively. For ordinary buildings the surface material at these holes would be regarded as perfectly safe foundation.

In connection with the proposed arrangement for the Azimuth marks at the observatory, if the surface material is excavated and the apparatus placed upon the hard blue unweathered rock, there will, in my opinion, be as much certainty of stability as can be looked for on any part of the earth's surface. The lenses and reflecting surface of mercury will lie upon the lowest and oldest local rocks. In such a series as the Malmesbury slates there is little probability of sudden jerks or displacements now occurring, though secular movements may prevail. Neither in the observatory grounds nor throughout the surrounding country is there any evidence either of landslips or of dislocations or faults in the rocks.

In conclusion, it may be said that, so far as the geological aspect of the stability of the proposed apparatus is concerned, the underlying rock will afford a perfectly sure foundation. It will only be when the destructive effect of the atmosphere and of percolating water makes itself felt on the now fresh rock that any change will occur, and this certainly belongs to the remote future.

With regard to possible faulting, it is extremely unlikely that any such process should now begin in the vicinity, and still more improbable that any warping or twisting should set in around an axis somewhere between any of the points chosen for the proposed apparatus. There is, therefore, every ground for believing that the foundation chosen will remain good for many generations—for a period, in fact, much longer than, I understand, the best-made telescope can be expected to endure.

Having regard to the depth below the surface of the ground, and the age, thickness, extent, and uniformity of the Malmesbury beds, it seemed probable that the proposed system of Meridian marks would prove to be exceptionally stable.

The proposal of H.M. Astronomer for employing marks situated below ground is based on Bohnenberger's method of determining the Nadir.

Object-glasses of the requisite focal length are to be attached to suitable mountings connected as directly as possible to the bed rock itself. The vertical planes passing through the optical centres of these four object-glasses define the lines of Azimuth reference.

Digitized by Google

Let A, fig. 1, be one of these object-glasses mounted on the cast-iron frame B, the latter being attached to the bottom D of a strong cast-iron tub cemented into a circular recess in the rock which forms the lower part of the lining of one of the pits. C is a dish of mercury contained in the cover B. E and F are two points, or, say, the section of two spider webs parallel to the Meridian and in the principal focal plane of the object-glass A. M is one of the Meridian marks (vertically over the optical centre of one of the long-focus lenses). E, F, and M are mounted in rigorous connection together upon a horizontal slide, which can be moved only in a direction at right angles to the Meridian. If the horizontal slide is now moved until M is vertically over the optical centre of the object-glass A, and if E and F are symmetrically fixed with respect to M, an image of F will be formed at E, and an image of E at F. Therefore, if a microscope of low power, T, and fitted with a prism of total reflection p, is fixed to the slide in the position shown, and focussed upon E, the image of F will be seen in coincidence with E. This, therefore, affords a method of accurately centring an overground mark vertically above an underground one, provided that E and F have been originally fixed symmetrically with the Meridian, when M is in the Meridian. If E and F are not rigorously symmetrical with M, the only result would be to centre M a small distance east or west of the Meridian—a matter of no consequence so long as that distance remains constant. The only possible origin of a change in the distance in question would be a change in the horizontality of the slide, which would have the effect of tilting M to east or west by a quantity

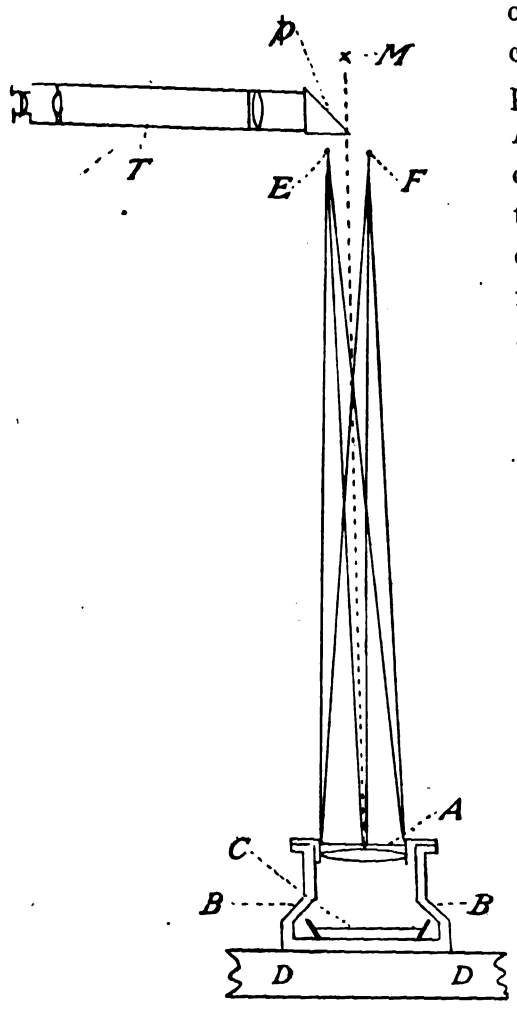

Fig. 1.

$$\Delta s = h \,.\, \sin \Delta b,$$

where Δs is the linear change of M to east or west,
„ h „ „ height of M above the focal plane of the object-glass A (about 0·5 foot),
and Δb „ „ change of level of the horizontal slide.

The resulting change in the Azimuth of the mark as viewed from the Transit Circle would therefore be :—

$$\sin \Delta a = \frac{h \,.\, \sin \Delta b}{f}$$

where f is the focal length of the viewing lens (in round numbers, 300 feet).

A change in the horizontality of the slide amounting to 60″ would thus only produce a change of 0″·1 in the Azimuth of the mark. But, as the slides which carry the long-focus lenses and marks are mounted on well-founded piers, it is exceedingly improbable that any change in the horizontality of the slides of half of this amount would take place; but perfect protection against such a contingency is provided by attaching rigidly to the slide an axis having pivots like those of a theodolite, and measuring by means of a striding level the change in level of this axis.

To anticipate matters somewhat, it may be well to remark here that, in practice, it was found not only very difficult to illuminate spider lines satisfactorily, but tedious and unsatisfactory to superimpose the image of the web F upon E. All difficulty vanished, however, by using in place of F a small hole (about 0·5 mm. in diameter) cleanly bored in a piece of thin metal, and illuminating this hole, on the side farther from the object-glass A, by the light of a small electric incandescent lamp reflected from a plane (painted dead white) inclined at 45 degrees to the vertical. This gave a sharp image of a bright disc at E capable of very accurate bisection by the web E, or still more accurately by a wire of 0·25 mm. diameter in place of E. In this way it was found that the probable error of the adjustment of M to a constant quantity east or west of the Meridian (as defined by the opticial centre of the lens A) did not amount to ±0·005 mm. for the single pointing, or about ±0″·01 as viewed from the Transit Circle.

This probable error is only roughly stated, because the scales provided for measuring the motion of the horizontal slide are graduated to 0·1 mm. and can be read by estimation only to 0·01 mm., or at best to 0·005 mm., and an experienced observer can make a large number of successive bisections of the disc F by the web E without being able to estimate with certainty any change in the scale reading.

Before the collimator piers could be built it was clear that their pits must be excavated and rendered water-

Digitized by Google

Digitized by Google

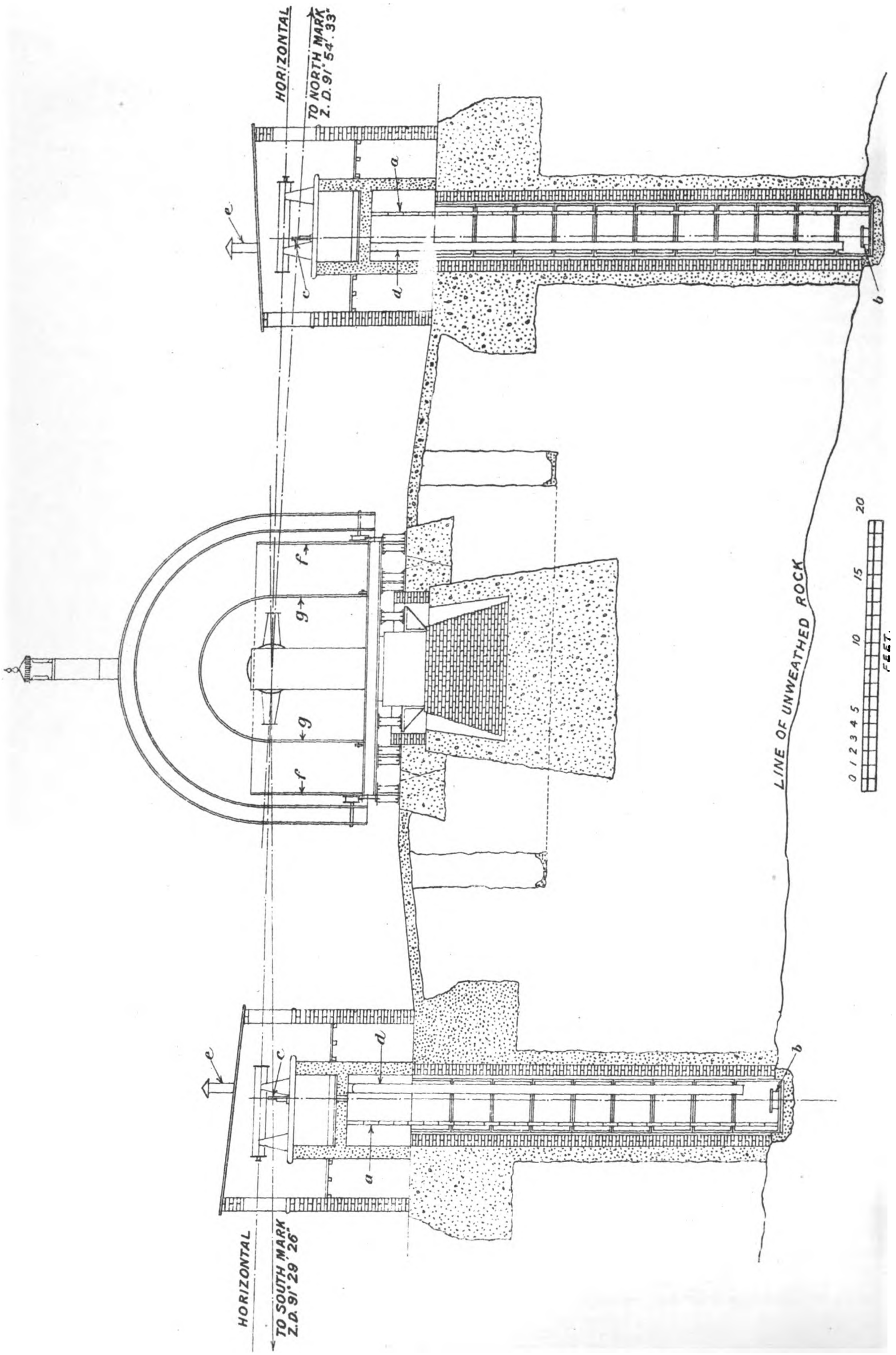

To face page 41.

Weller & Graham, Ltd Litho. London

Digitized by Google

tight by iron linings or other means. The excavations were made in the dry season, and the Admiralty engineers decided that, instead of adopting the iron lining proposed by H.M. Astronomer, brick walls would be sufficient to exclude water if the space between the walls and the surrounding rock was filled with a mixture of good Portland cement and sand. But, so soon as the wet season set in, this plan proved useless, and it was ultimately found necessary to line the pits with hermetically jointed cast-iron cylinders.

It is unnecessary to go into a full account of the many vexatious delays which occurred before the whole was perfected, but some idea of them may be gathered from the following facts:—

1st. The completion of the iron-lined pits was necessary before the collimator piers and houses could be built.

2nd. Until the long-focus lenses were mounted on the collimator piers the precise positions of the pits for the Meridian marks could not be determined with all desirable accuracy, for the position of the centre of the Meridian-mark pits had to be determined within 3 or 4 inches. This limitation arises from the fact that, for convenience of access, the support of the object-glass had to be fixed near one side of the pit (see Plate I.), and it was desirable on grounds of economy not to make the diameter of the pits larger than absolutely necessary for convenience of access.

3rd. Also, until the pits were completed and lined—indeed, until the long-focus lenses and overground marks were erected—the foci of the object-glasses (defining the underground marks) could not be exactly determined, and there then remained the difficulty of getting these object-glasses of 4 inches aperture, and of foci from 40 to 20 feet, made to exact focus within 1 or 2 inches. Messrs Troughton & Simms found great difficulty in executing this task; but after many trials, involving more than a year's delay, they were satisfactorily completed.

It was, indeed, not until September 1905 that these lenses were procured and mounted.

THE OBSERVATORY AND ITS SURROUNDINGS.

The general design of the observatory and its surroundings will be best gathered from Plates I., II. and III.

Plate I. shows a section through the plane of the meridian of the Transit Circle, its observatory, the collimators, their houses, and the collimator pits.

Plate II., a plan of the same, showing also the chronograph house.

Plate III., a section through the prime vertical.

These plates, coupled with the previous remarks, are almost self-explanatory of the general design.

In Plate I. the reader will recognise the heavy concrete foundations (the excavations for which were originally made in the hope of finding sufficiently stable foundations for the Transit Circle and the piers of the collimating lenses), the brick-lined pits surrounded by concrete (which had subsequently to be lined with iron cylinders), and the brickwork which carries the stone pillar on which the Transit Circle rests. He will also note, in Plates I. and III., the excavated drain for keeping the brickwork of the transit pier free from water, and the cement protection from surface moisture.

a a, Plate I., are the iron ladders (attached to the iron cylinders) which give access to the object-glass and mercury trough at the bottom of each pit.

b b are the mountings of these object-glasses, which also enclose the mercury troughs.

c c are the lenses of long focus by which the Azimuth marks are viewed by the Transit Circle. The north mark is distant 295 feet from its viewing lens, and the south mark 235 feet.

d d are ventilating shafts which, bending off at an angle of 45° from the point where they appear to end in fig. 1, pass through the western walls of the collimator houses and terminate in the vertical shafts *e e*. These ventilating tubes were found to be necessary in order to keep the interior of the pits free from condensed moisture. They have been found very effective, although provision is made, if necessary, to increase the draught by heat from an electric lamp placed at the lower entrance of the tube.

f f is the sheet-iron wind-screen.

g g, the light framework, covered with thin papier-mâché, which is run over the instrument to protect it from dust, or during observations of the sun in the manner afterwards described.

Plate II. is a plan of the observatory illustrating farther the points already described.

h is a turn-table which allows the reversing instrument (subsequently described) to be run to the position *k*, where it remains when not in use. This apparatus serves also as a stand for the observer when making observations of Nadir, or for reversing the Transit Circle.

Digitized by Google

m shows the position of the electro-motor and worm-wheel pillar used to open and close the observatory, the action of which is subsequently described.

Plate III. is a sectional elevation through the prime vertical as seen from the north. It shows, *inter alia*, the steps which give entrance to the observatory; these roll back as the observatory opens. A piece of iron flooring, of the width of the entrance door, is attached, and overlaps the rest of the floor by 4 feet when the observatory is closed. When the observatory is fully opened this slides backwards 3 feet, but leaves a bridge between the outer entrance door and the door of the wind-screen enclosure *f*.

Plate IV., from photographs taken during the erection of the observatory, illustrates its construction.

No. 1 shows the iron framework which supports the iron flooring and the rails on which the wheels carrying the superstructure roll. The Devil's Peak of Table Mountain is seen in the distance.

No. 2 shows the internal structure of the observatory, where only the middle plates of the triple enclosure are as yet erected. These plates are omitted at the top in order to allow all the funnels, formed by the ribs, to enter the sloping passage to the ventilating chimney.

No. 3 shows the vertical funnels at the ends of the observatory, all of which also lead to the ventilating chimney.

No. 4 shows one half of the observatory, in which the outer steel sheeting has not been yet attached, and the other half which is complete, except the cowl of the ventilating funnel.

Plate V., No. 1, shows the completed observatory, before the surrounding ground has been levelled and whilst the Transit Circle is in course of erection.

No. 2 shows the completed observatory with the houses for the collimators and the chronograph room.

Plate VI. shows details of the method of opening and closing the observatory.

m is a $\frac{1}{2}$-horse-power electro-motor connected with the 50-volt lighting circuit. A worm on the end of the armature shaft turns the worm-wheel *a*. On the axis of *a* is a worm which turns the wheel *b* that is mounted upon the vertical shaft *c*. The bevel-wheel *d* on the end of this vertical shaft gears into the bevel-wheel *e*, on the shaft of which are also the wheels *f*, *g*, and the bevel-wheel *h*. The wheels *f* and *g* gear into the racks *l* and *o* and so cause the wheels *p*, *q* to roll on the rails *r*, *s*.

The shaft *k* communicates equal and opposite motion to the other half of the observatory.

The motor is started in either direction by an ordinary starting switch. When the observatory is fully open the circuit for "opening" is automatically cut, and when closed the closing circuit is automatically cut. The whole has worked to perfection.

The motor and starting switch were made by the Ediswan Company; the automatic cut-outs were designed by H.M. Astronomer, and made in the observatory workshop.

THE TRANSIT CIRCLE.

The Adjustable Base-Plate.

Plate VII. gives a plan and elevation of the adjustable base of the hollow iron piers of the instrument.

Resting on the top of the stone pier is a strong cast-iron base-plate A B C D, made in the form of an open tank. The reason for the adoption of this form was that it might be filled with oil far enough to prevent the rusting of the inner adjustable parts.

The inner bottom of the tank is planed flat and finished to a true plane.

Resting upon this finished surface is an iron casting, having the form of two rectangular pieces of iron E H and K F connected together by six broad radial arms and the side-pieces shown in the plan, and besides eight vertical lugs (marked M in the plan). The whole casting constitutes the adjustment in Azimuth, because it can be moved about the pin G as a centre by means of the screws N N, shown at the eastern end of the plan, which act upon a block O attached to the bottom of the tank. The under-side of this casting is planed, and rests truly upon the finished bottom of the tank.

The elongated bolt-holes in the casting at P, P, P, P, permit motion in Azimuth, and when the adjustment has been effected, by aid of the screws N N, the bolts at P are tightened up.

Q R S T is a strong, cast-iron frame, fitting between the eight lugs M, its surface opposite these lugs and the inner surfaces of the lugs themselves being accurately finished so that the frame Q R S T can move between these lugs, but without shake. This frame affords the means of adjusting the instrument in Level. For this purpose it will be seen that the frame Q R S T rests only at three points upon the casting E H K F, viz. upon the

Digitized by Google

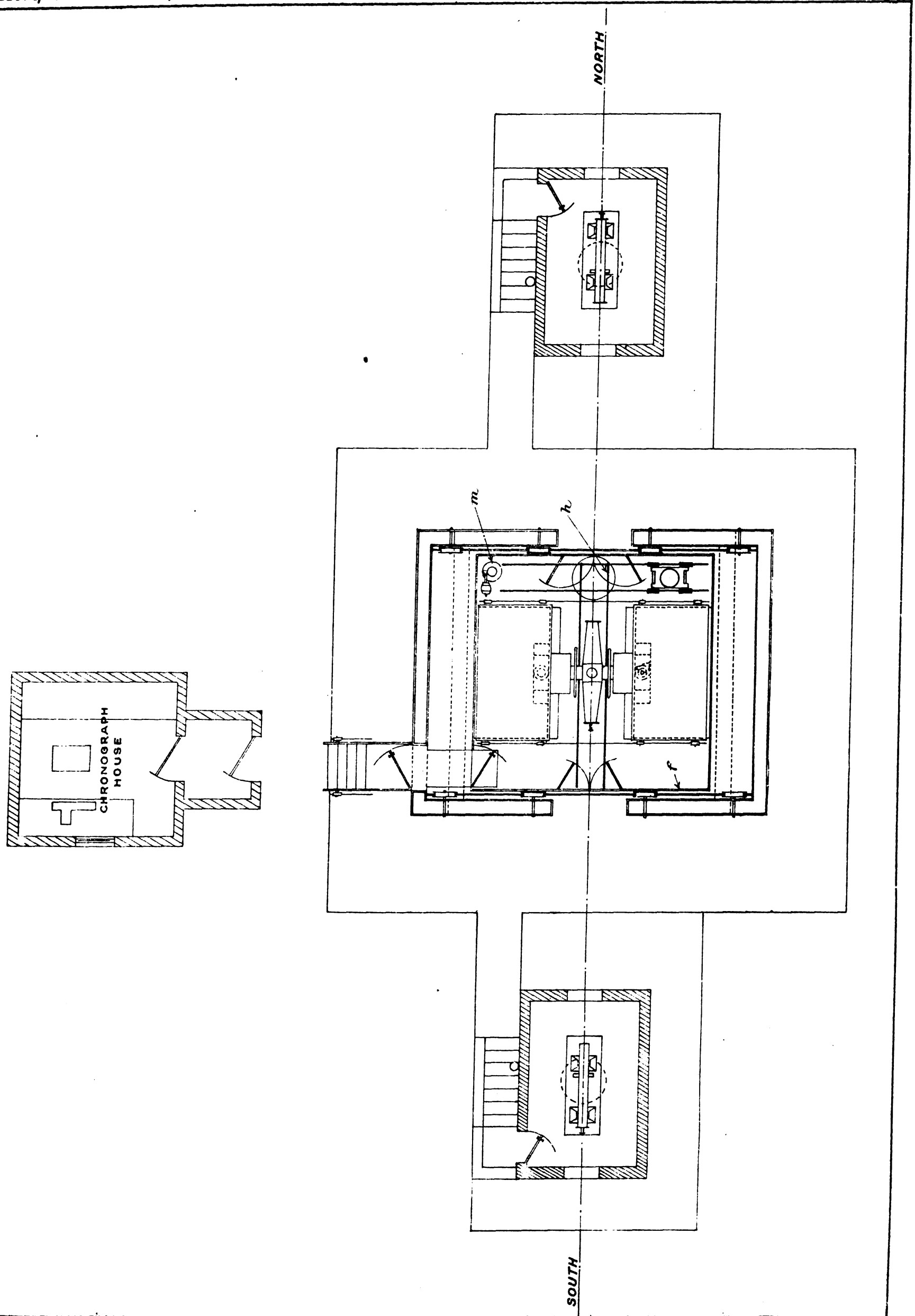

Waller & Graham, Ltd. Litho. London

Digitized by Google

Digitized by Google

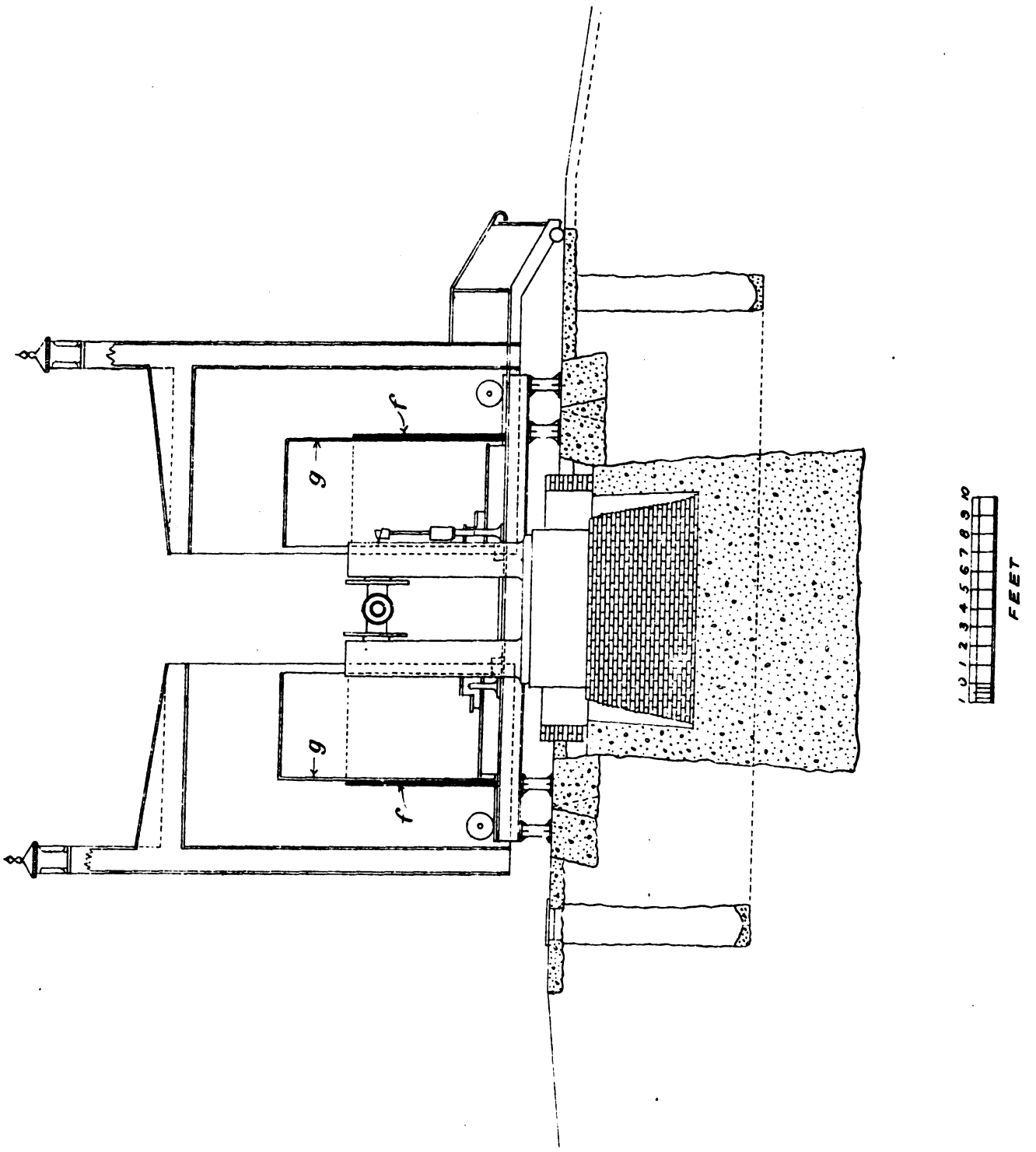

Weller & Graham, Ltd Litho, London
Digitized by Google

Digitized by Google

Digitized by Google

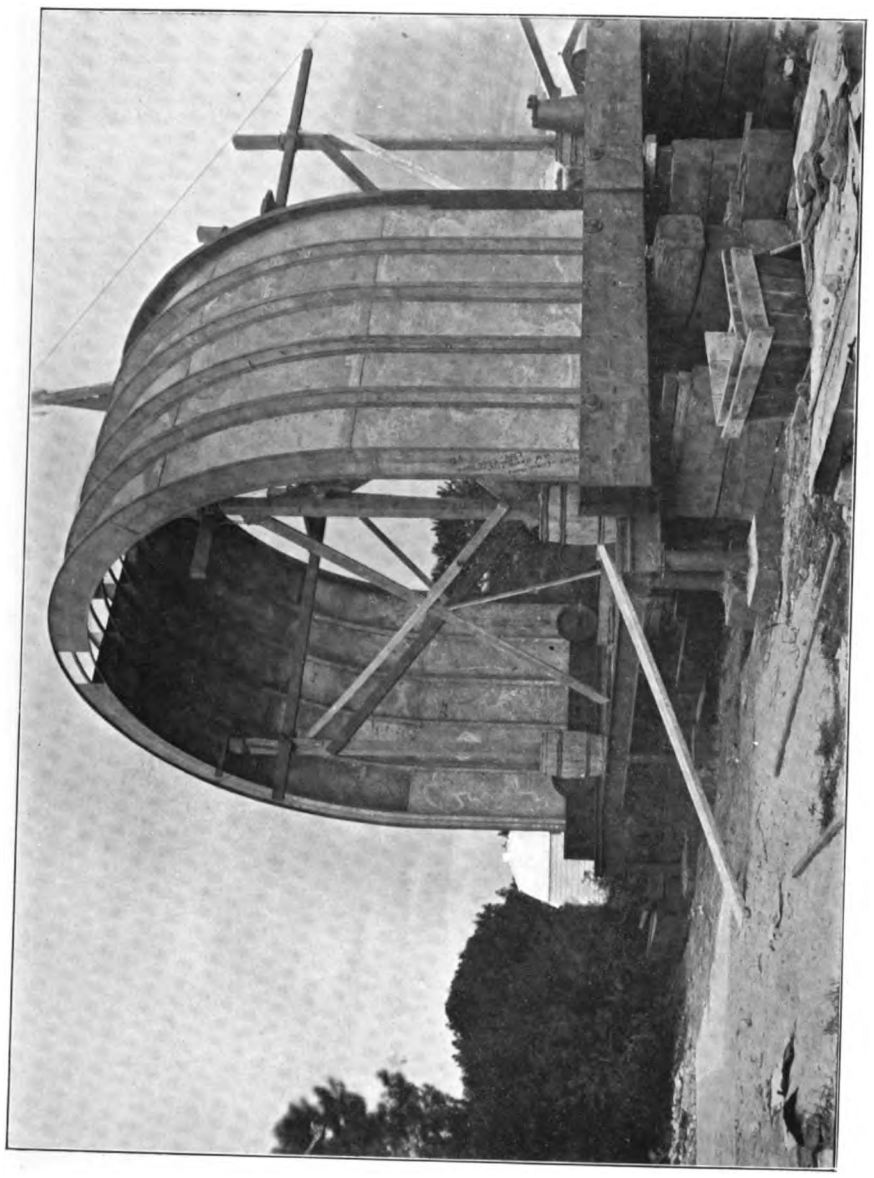

No. 2.

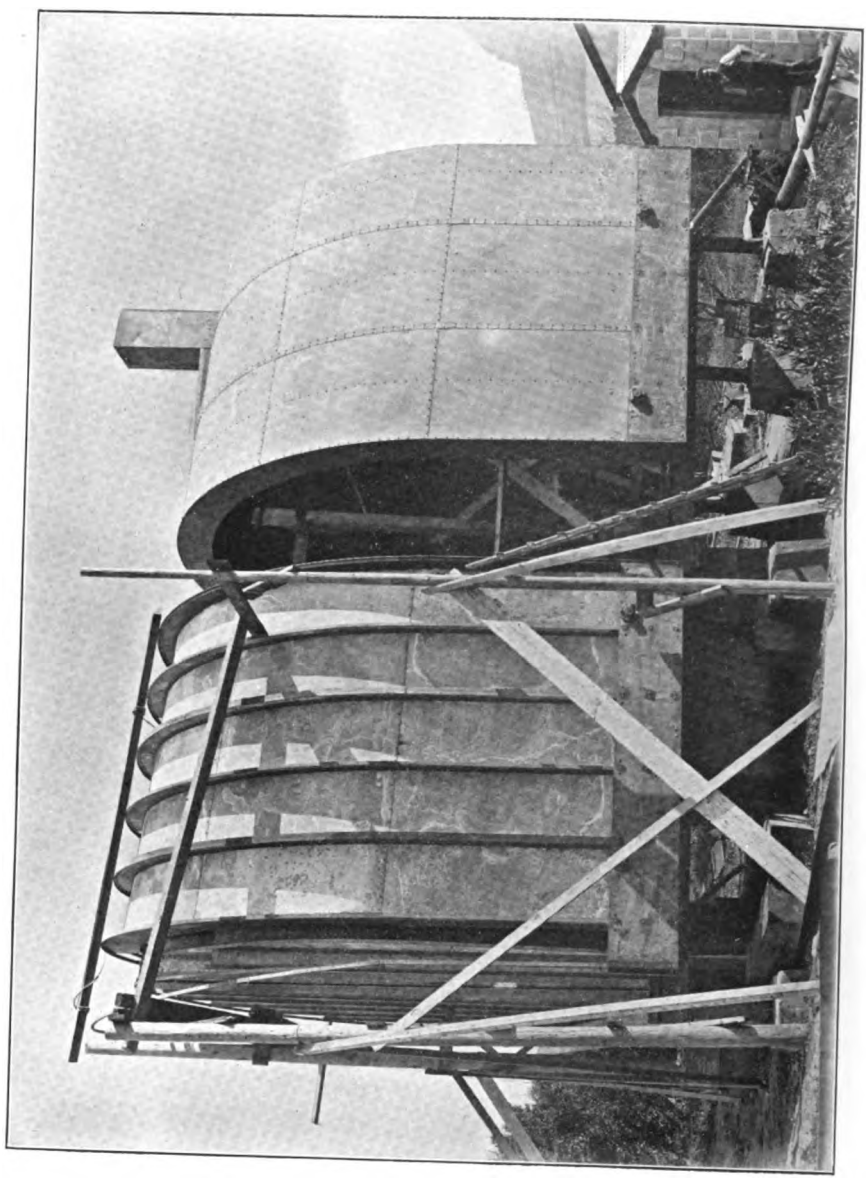

No. 4.

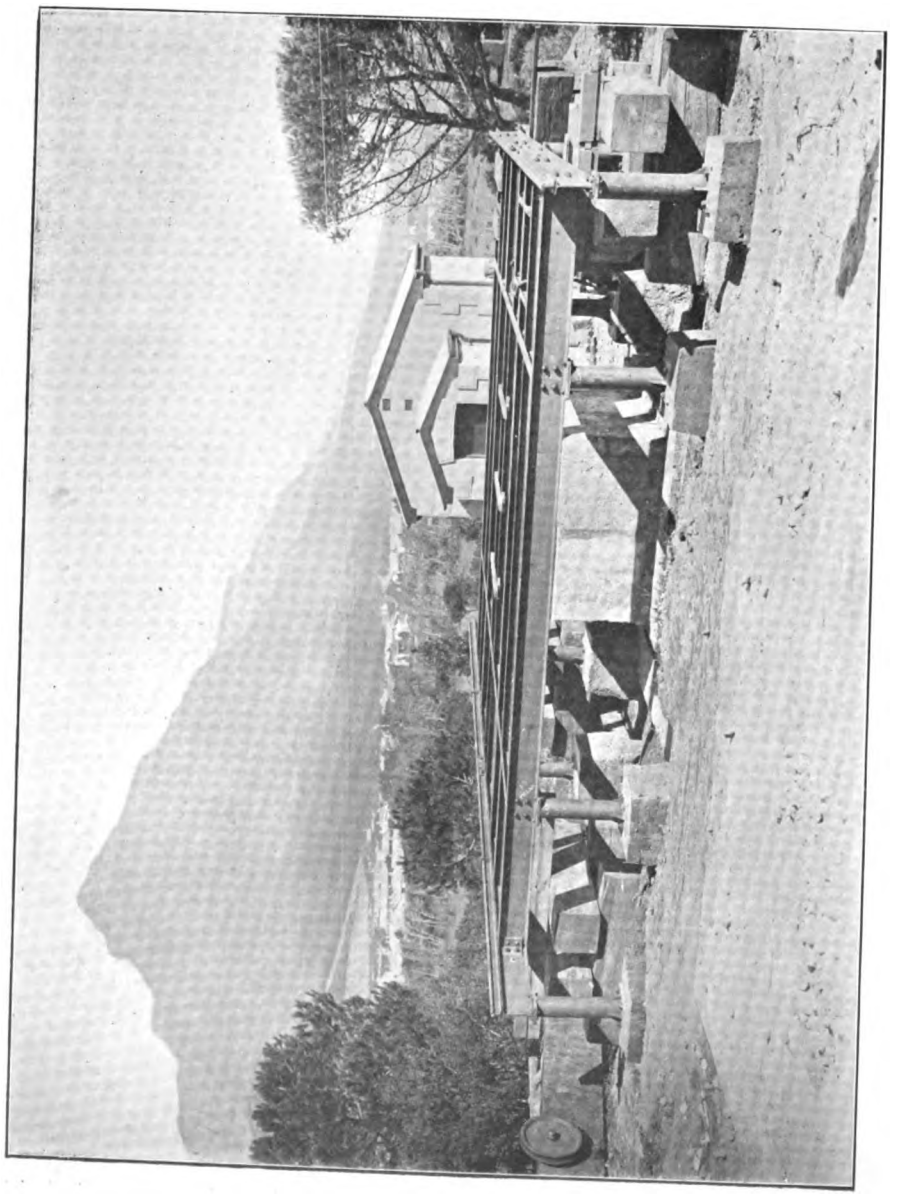

No. 1.

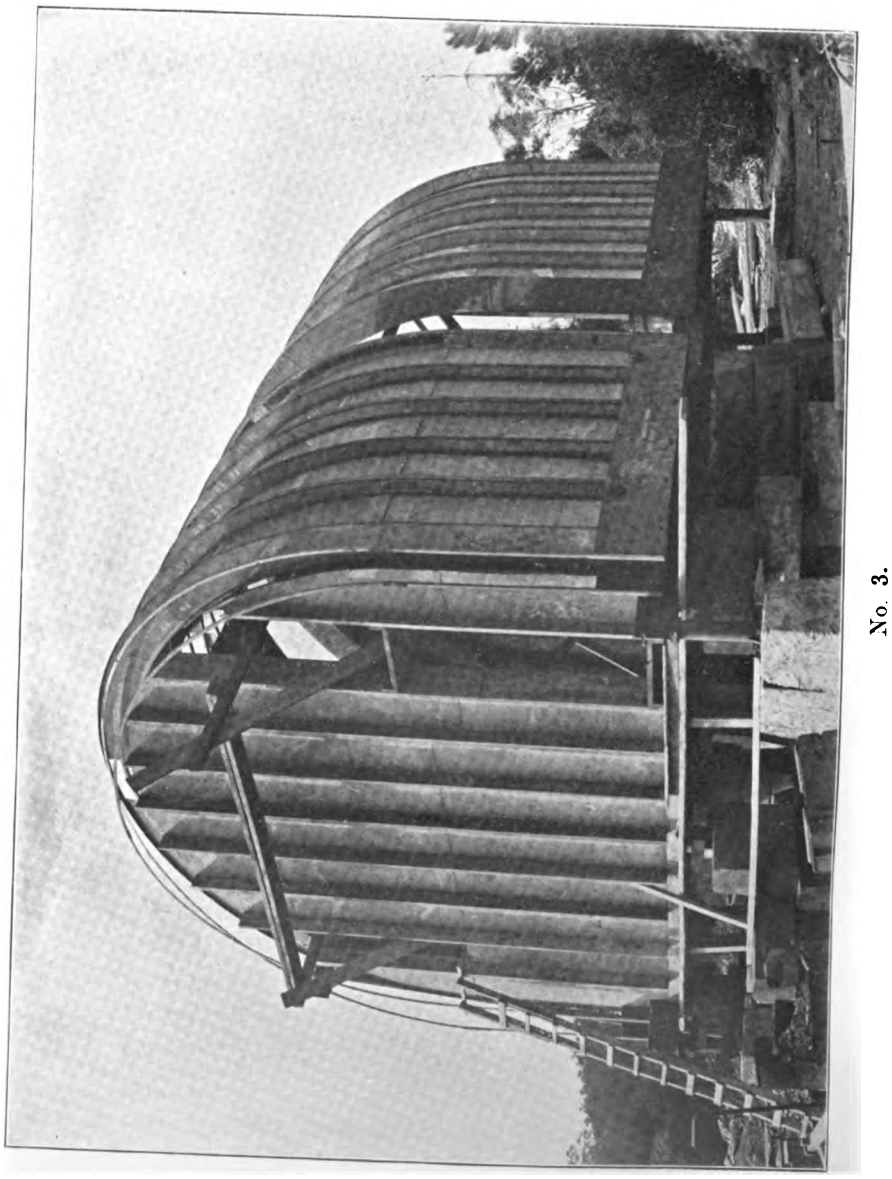

No. 3.

[*To face page* 42.

Digitized by Google

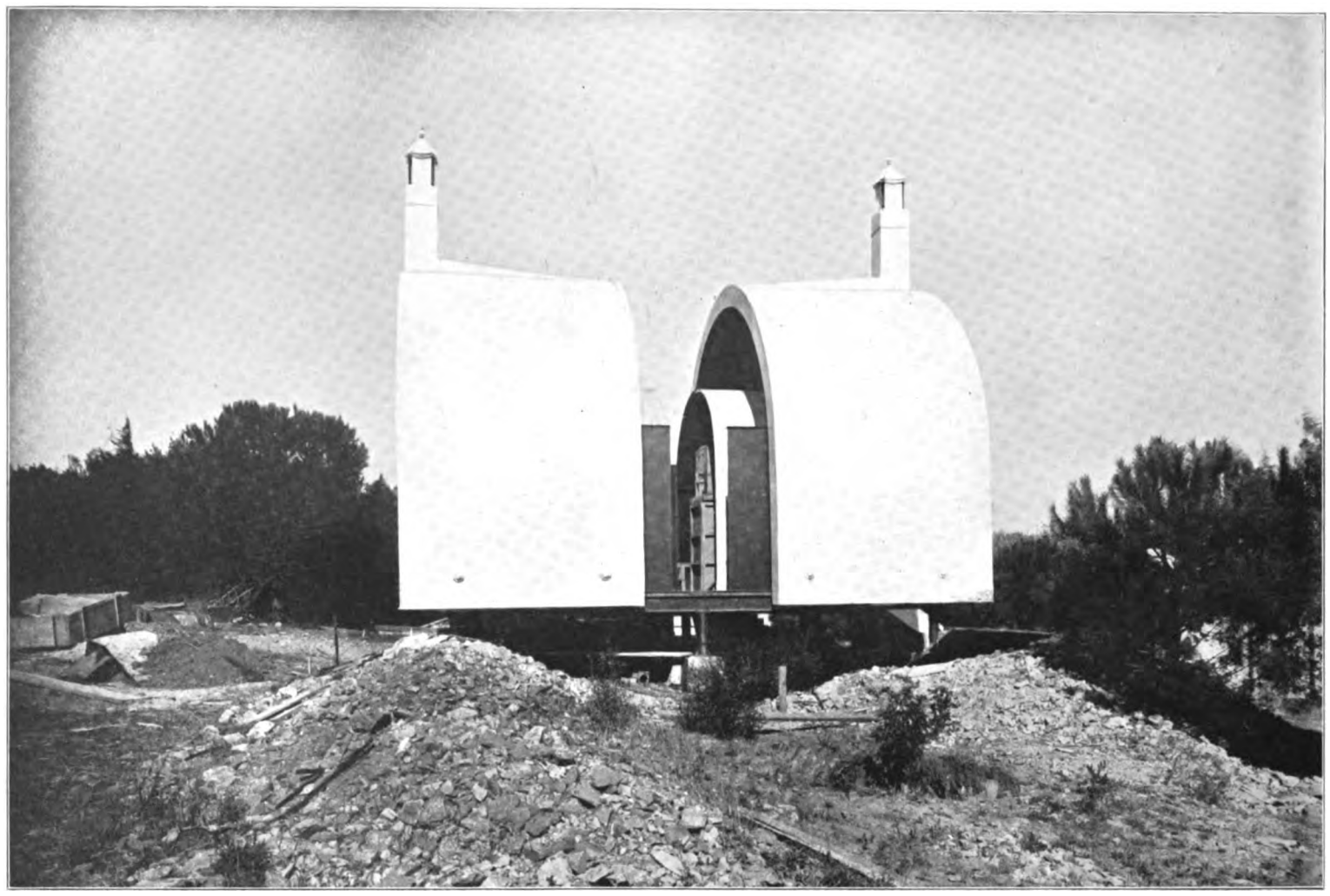

No. 1.

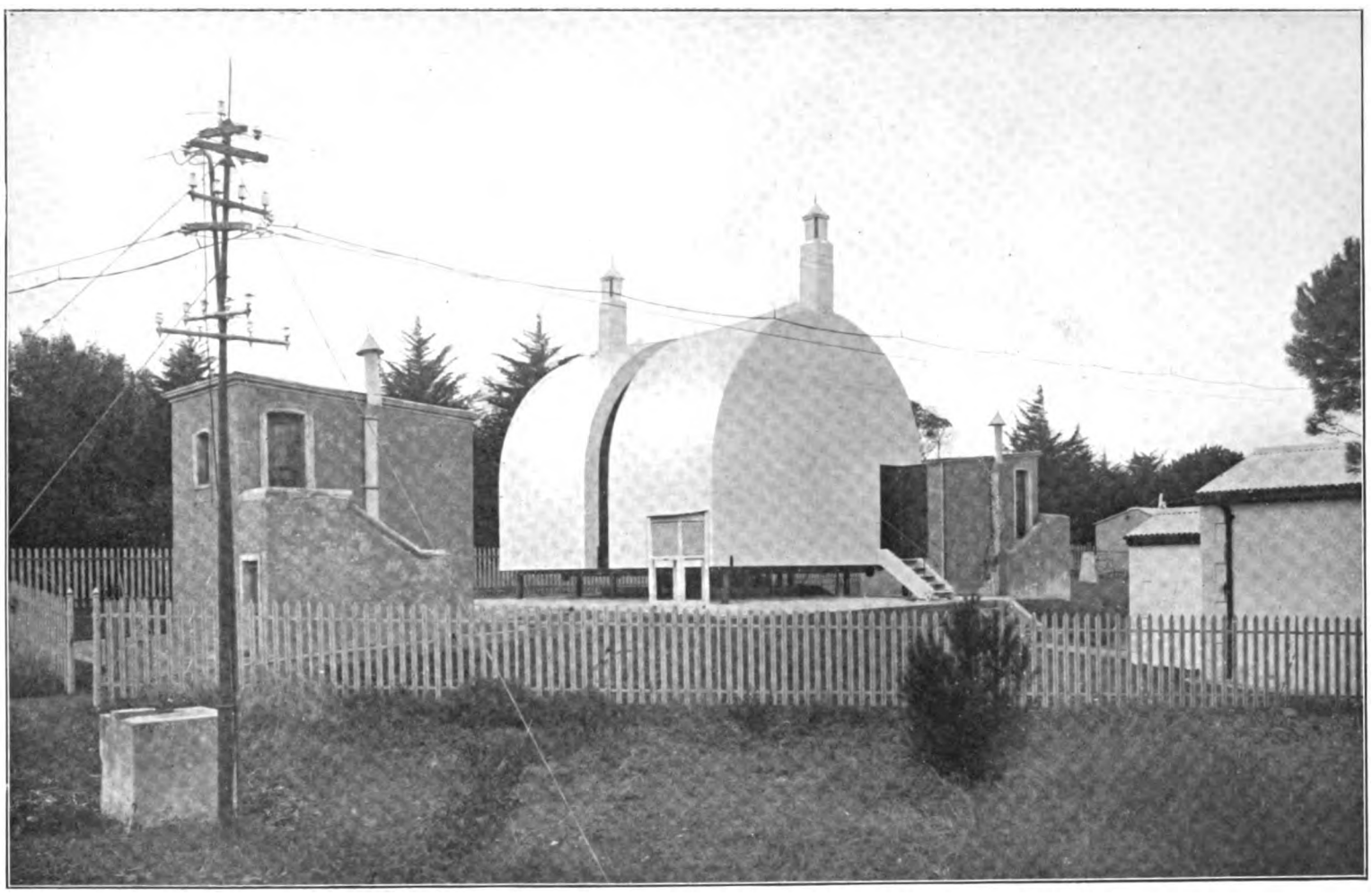

No. 2.

[*To face page* 42.

Digitized by Google

Digitized by Google

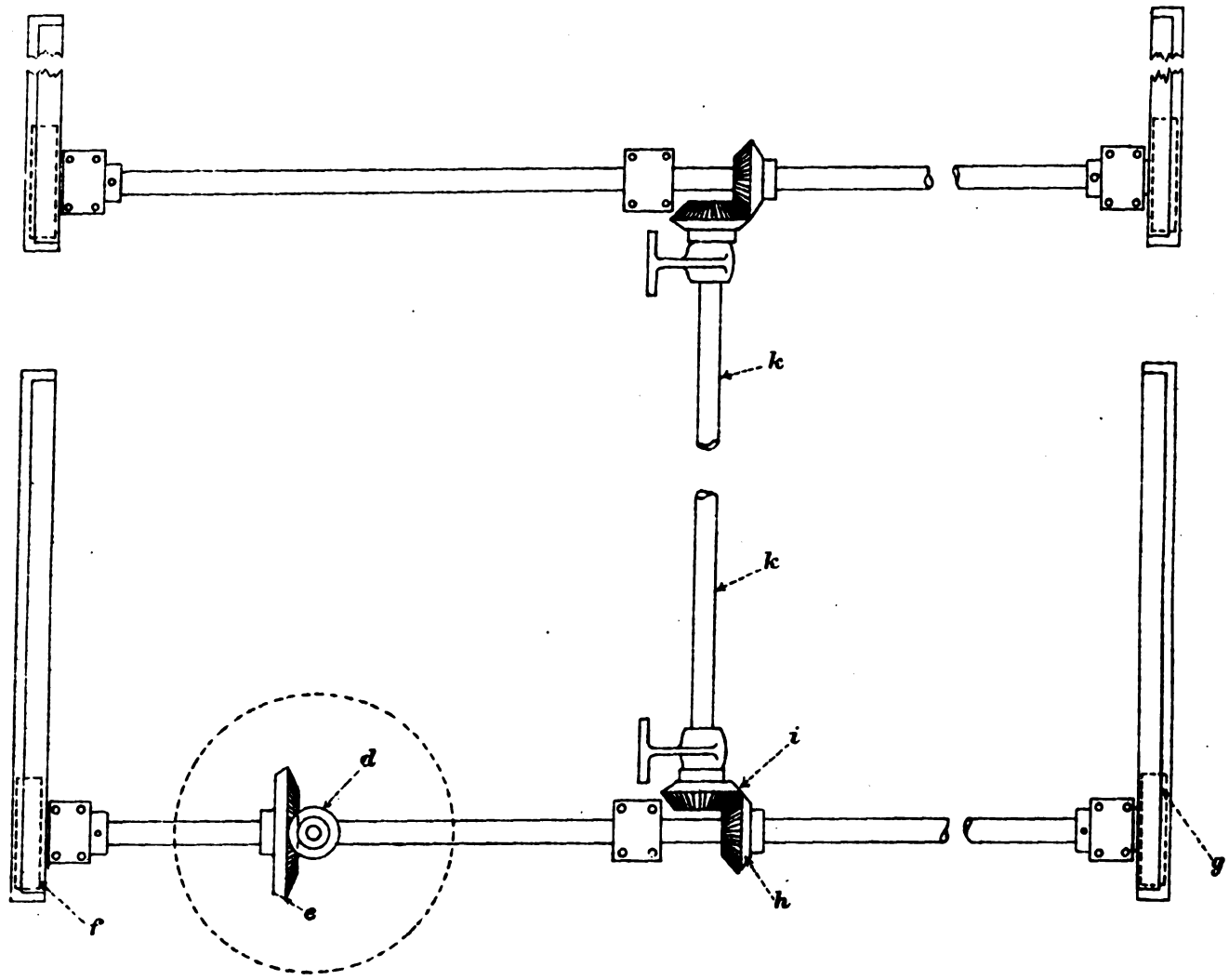

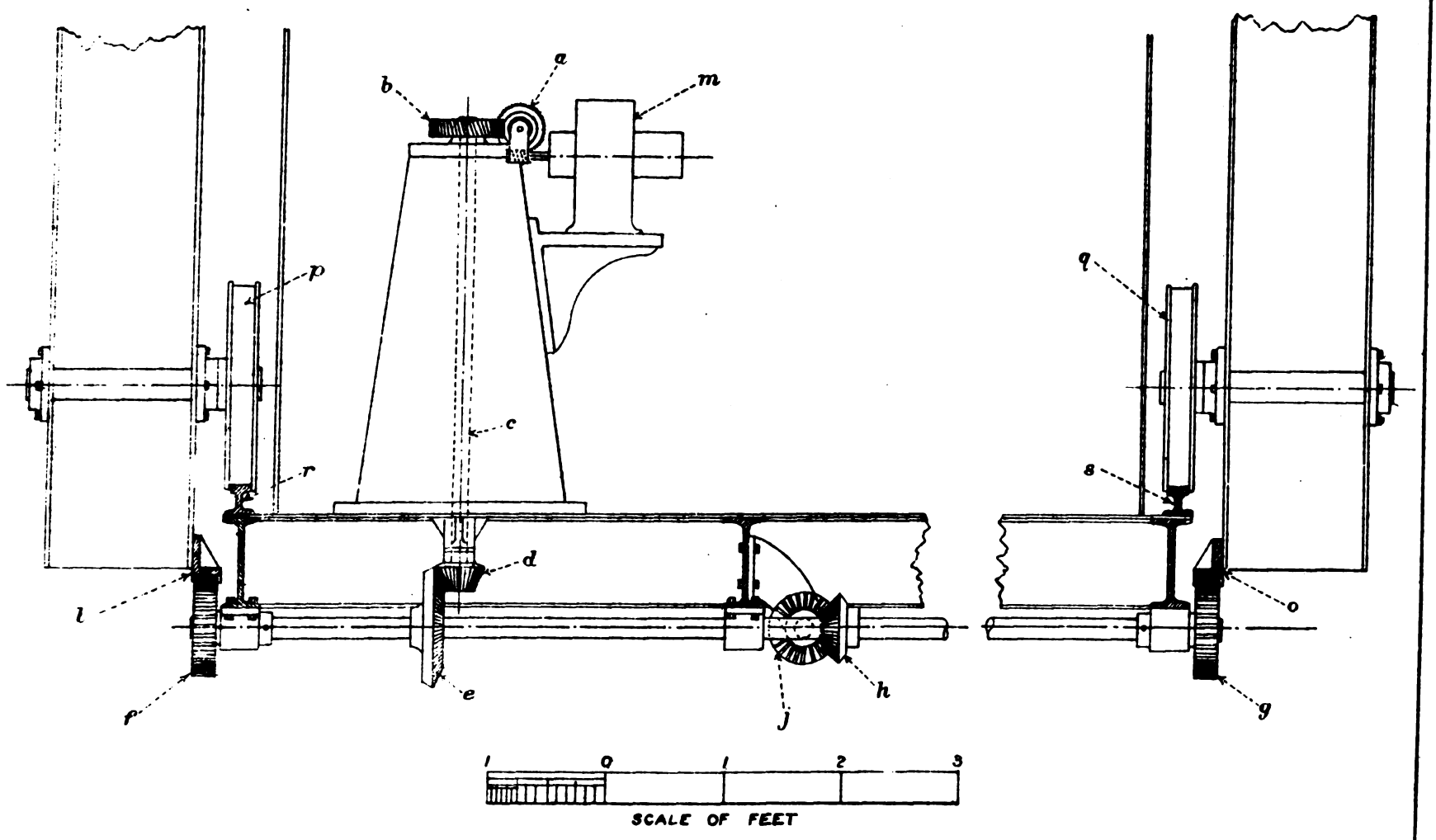

3641.

To face page 42.

Weller & Graham, Lith. Litho. London

Digitized by Google

Digitized by Google

THE ADJUSTABLE BASE OF THE TRANSIT INSTRUMENT

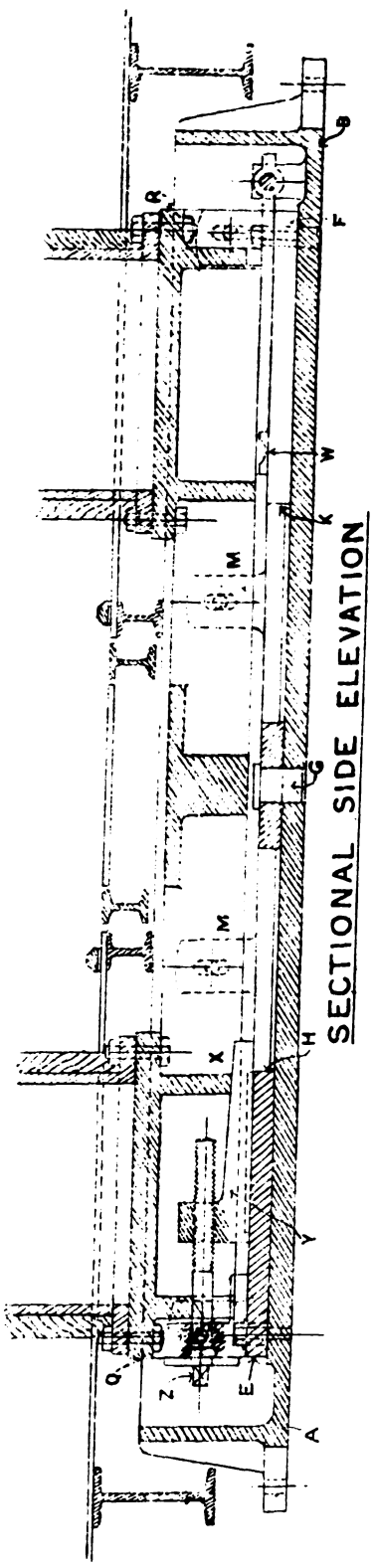

SECTIONAL SIDE ELEVATION

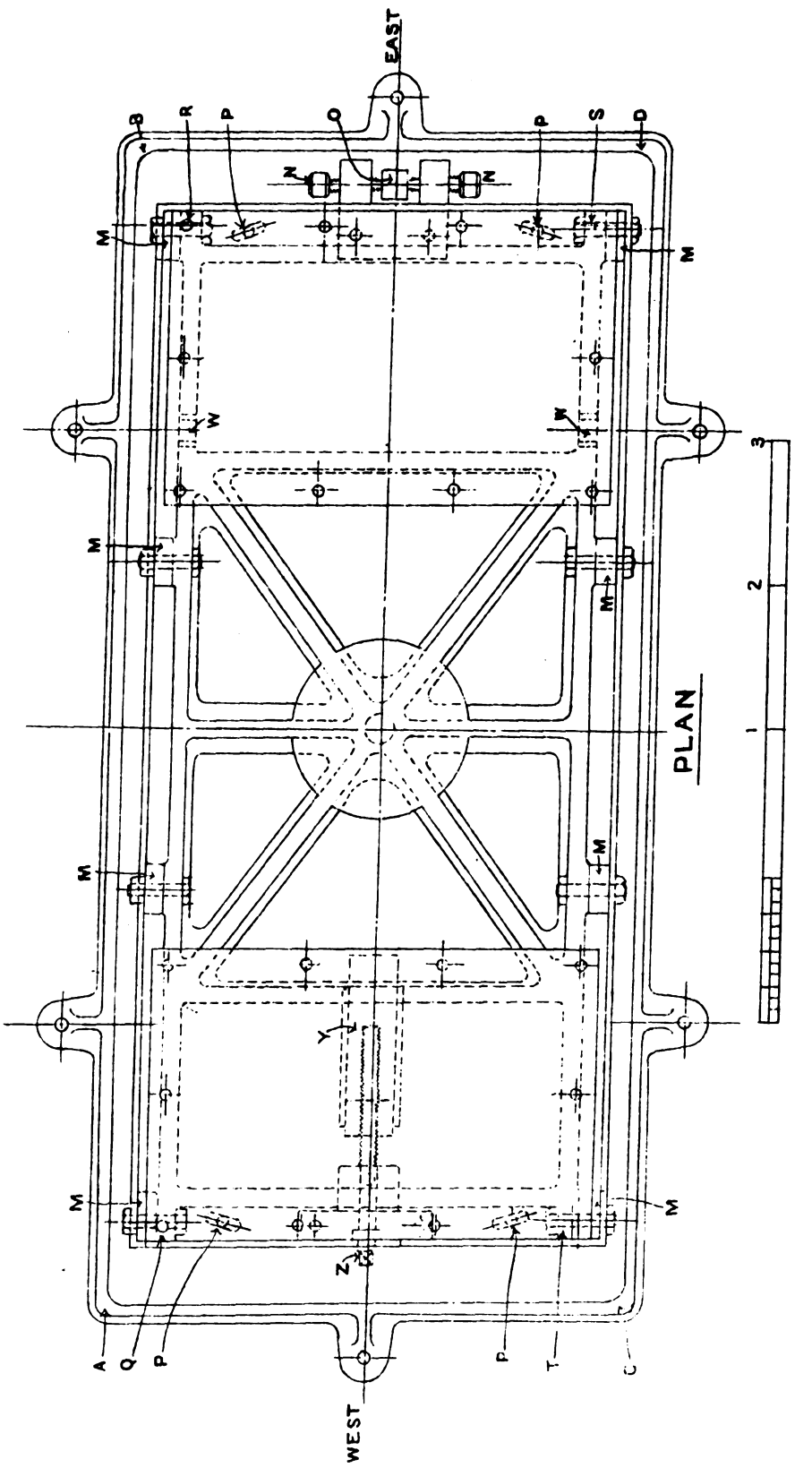

PLAN

To face page 42.

Waller & Graham Ltd Printers, London
Digitized by Google

Digitized by Google

two bearing points W W, and upon the wedge Y at X. This wedge is moved by the screw Z and can, within certain limits, tilt the frame Q R S T as may be desired. When the adjustment in Level has been effected, the levelling frame can be clamped to the eight lugs M by means of bolts passing through elongated holes in the lugs, so that the whole iron foundation then becomes practically one solid structure.

It will be seen from the section and elevation that the strong foundation plates of the transit piers, truly planed on their upper surface and to which the piers are bolted, form also a part of the levelling frame.

In mounting the base-plate or tank upon the stone pier it was first placed approximately in the Meridian by means of truly oriented lines laid down with the aid of a theodolite. It was wedged up about half an inch above the surface of the stone pier, and its finished inner surface levelled as nearly as possible. The rest of the iron work and the piers having then been erected, a small auxiliary telescope mounted at right angles to an iron tube, and provided with gun-metal pivots of the same diameter and the same distance apart as those of the Transit Circle, was mounted on the piers. With the aid of the transit instrument thus formed, and by tapping the wedges, the adjustment in Azimuth and Level was then made practically perfect, whilst the fine motions for Azimuth and Level remained in the middle of their range.

This done, a surrounding wall of clay, about one inch in height, was made round the edge of the stone pier, and a thin mortar (equal parts of Portland cement and sand) was grouted underneath the tank, being worked in with strips of hoop iron from one side till the cement flowed out at the other and finally rose to an equal height all round the base-plate to the level of the clay wall. When the cement had nearly set, the clay wall and all outstanding cement beyond the iron base were removed, so that the instrument rests without bolts and without constraint on the stone pier, with about half an inch of solid intervening cement.

The Transit Circle.

The Transit Circle proper is shown on Plate VIII.

1, 1 are the hollow cast-iron piers, which are bolted to the planed cast-iron foundation plates Q and R, shown in the sectional side-elevation of the adjustable base of the Transit Circle, Plate VII. They are coated to the thickness of $1\frac{1}{2}$ inches with a mixture of paraffin wax and powdered pumice-stone melted together and run into slabs entirely covering the pier. The pier is then covered externally with sheet-copper to present a clean surface.

2, 2 are cast-iron boxes which are bolted to the iron piers. There is a strong arched rib on this casting, shown in section at 3; it is flattened at the top to carry the pivot-bearings. The boxes 2, 2 also form the supports of the micrometer-microscopes, which are omitted to avoid confusion in the present figure.

The positions of the microscopes are shown on the figure on the left-hand side of Plate VIII. There are six principal microscopes on each pier; they are marked A, B, C, D, E, F on the east pier, as shown in the figure, and on the west pier, G, H, I, K, L, M.

O is the low-power reader, which gives the reading of the circle to the nearest 5′. The graduations of the circles are numbered to each degree; the field of the low-power reader embraces fully 1° of the circle.

Besides the six microscopes, which are read with every observation of a fundamental star, there are two pairs of auxiliary microscopes on each pier, placed at diameters 20° and 25° from the diameter A B; these latter microscopes are employed only in the investigation of the division errors of the circle.

Each microscope is supported on bearings attached to opposite sides of the cast-iron box. The solid-drawn steel tubes of the microscopes pass freely through larger steel tubes, which are fixed like "boiler tubes" in the cast-iron box.

The micrometer boxes and screws are of steel, the slides of iron, the micrometer heads of celluloid.

The iron boxes, 2, which carry the microscopes, are coated with $\frac{1}{2}$-inch-thick slabs of the same non-conducting material as the piers, and then, like the piers, sheathed with copper. But, in the case of the iron boxes, they are further lined outside the copper with $\frac{1}{2}$-inch-thick mahogany—not so much as an additional protection against change of temperature, but as a convenient material for the attachment of electric conductors, switches, etc., connected with the illumination of the circle microscopes. The flanges of the piers and iron boxes are enclosed in mahogany (see Plate VIII., 4 and 5).

The axis of the Transit Circle is of cast iron—a remarkably fine example of the founder's skill, being quite homogeneous and free from "blow-holes." It has the form of two truncated cones with a central cube, the latter having short, flanged cylinders, forming the means of attachment for the truncated cones that complete the tube of the telescope; the whole is strongly diaphragmed, as shown in the figure. The conical parts and the diaphragms are turned both inside and outside.

Digitized by Google

The pivots are hollow cylinders of flint-hardened steel shrunk into the cast-iron ends of the axis, as best shown in Plate IX. Mr Simms encountered very great difficulty in hardening such masses of steel, and it would certainly have been preferable to have simply shrunk thin hollow cylinders of hardened steel upon the pivots in the manner first suggested to him. He, however, took the more heroic course and finally succeeded in hardening the pivots, although probably not so homogeneously as if the hardening process had been confined to a much smaller mass. The bearings of the pivots are shown at 6, Plate VIII. These are not the segmental bearings usually adopted with non-hardened pivots, but true V bearings with slightly rounded faces set at an angle of 90°, and presenting, at first, only two points as bearings for the pivot. These points, of course, soon wear to bearings of appreciable width, but exactly adapted to the hard pivots which have produced the wear. Long segmental bearings give unreliable results, because the slightest change in the relative heights of the two supporting piers must cause one pivot to bear only on the inner edge, and the other only on the outer edge of their respective bearings. It is necessary, however, with either form of bearing to determine the errors of the pivots from time to time in order to ascertain whether the pivot-errors change as the result of change in the bearing or wear of the pivot. The pressure of the pivots on their bearings is relieved by the ball-bearing rings, which are attached to chains, and the latter to the levers and counterpoise weights, 8. The residual weight left bearing upon each pivot is only a few pounds.

7, 7 are vulcanite rings on which copper rings are mounted, pressed upon by wipers. Through these wipers and rings the electric connections for illumination of the eye-end and field and for the connections with the chronograph are made.

9 is the end-bearing of the western pivot. It is held in position by the screw 10.

11 is the end-bearing of the eastern pivot. It slides within the hollow screw 12, and it is pressed against the end of the pivot by a strong spiral spring, the coils of which are shown at 13 (see also Plate IX.).

The female screw, 14, is provided for withdrawing the pressure of 11 upon the pivot before the Transit Circle is reversed.

The circles are shown at 15 and 25, together with their protecting copper discs; it will be seen that the disc farthest from the microscope is turned over so as to protect the edge of the circle, but yet to leave the divisions visible by the microscopes.

15 is the fixed circle, 25 the movable circle—that is to say, 25 can be independently rotated on the axis with respect to 15. As originally constructed, the circles were further surrounded by copper enclosures attached to the piers; and the circles were read through apertures in the enclosures. It was found, however, that with these outer enclosures the circulation of air about the circles was so impeded that, after damp weather, moisture was deposited on the graduated surfaces to such an extent that the divisions could not be accurately read, and we had reluctantly to abandon the use of the fixed copper enclosures.

16 is the clamp, of which a larger scale drawing is given on Plate X.

17 is the head of the clamping screw, which can also be operated by the handles 18 (Plate X.); 19, 19 are the slow-motion handles. 20 is a most useful relief-friction wheel, the axis of which is mounted on a spring, and this wonderfully relieves the friction of the clamp on the axis when the screw 17 is unclamped. The action of the clamp and slow motion will be evident on inspection of Plate X. When the instrument is reversed it is necessary to remove the screws which attach the piece 22 to 21 and to bolt 22 to the similar piece 21 on the opposite pier. 23, 23 are the hand-wheels which are used for setting the telescope to the required Zenith distance previous to observation.

24, 24 are the slots into which the head-pieces of the reversing apparatus enter.

26 is a piece which counterpoises the weight of the clamp 16; it can be turned and clamped with respect to the axis of the Transit Circle, and is provided with means for giving small motions of rotation to the circle 25.

Each of the two flanged truncated cones, 28, which form the tube of the telescope, is a single iron casting; both cones are turned to perfect similarity externally and internally; they are bolted to the flanges of the short cylinders 27 that form part of the axis of the instrument.

29, 29 are projections cast on the tubes, and form the attachments for the double copper envelopes which surround the tube to protect it from unequal heating on its opposite sides.

30a is a 6-inch aperture, strongly ribbed to prevent weakening of the axis, through which the collimators can be mutually sighted upon each other.

The object-glass mounting is attached by eight screws to the flanged end of one cone at 30, and the eye-end micrometer to the flanged end of the other cone at 31. The fittings of both ends are exactly similar, so that the object-glass and eye-ends can be interchanged. The copper envelopes are entirely independent of the conical iron tubes except at their point of attachment, 29.

Digitized by Google

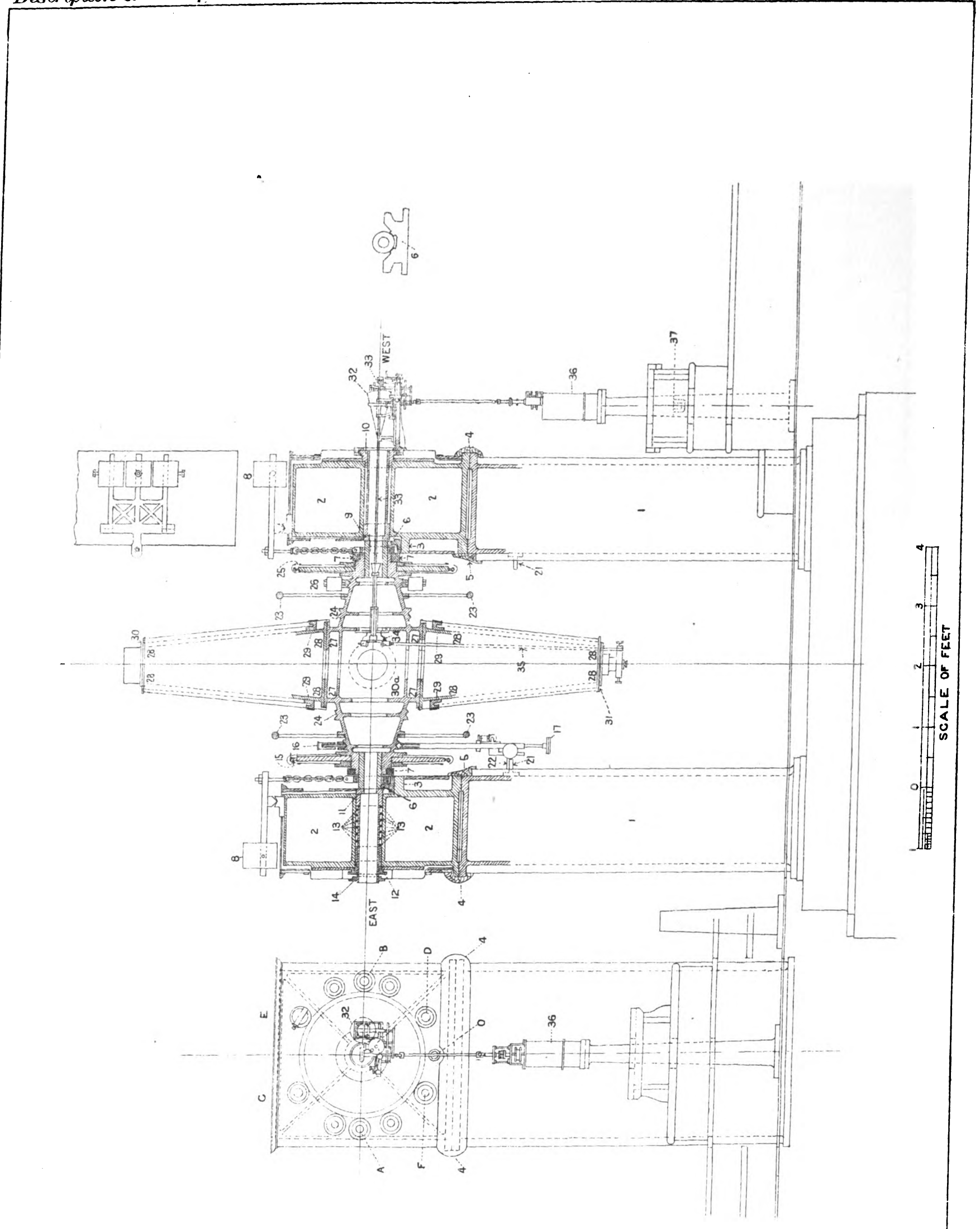

To face page 44.

2641.

Digitized by Google

Digitized by Google

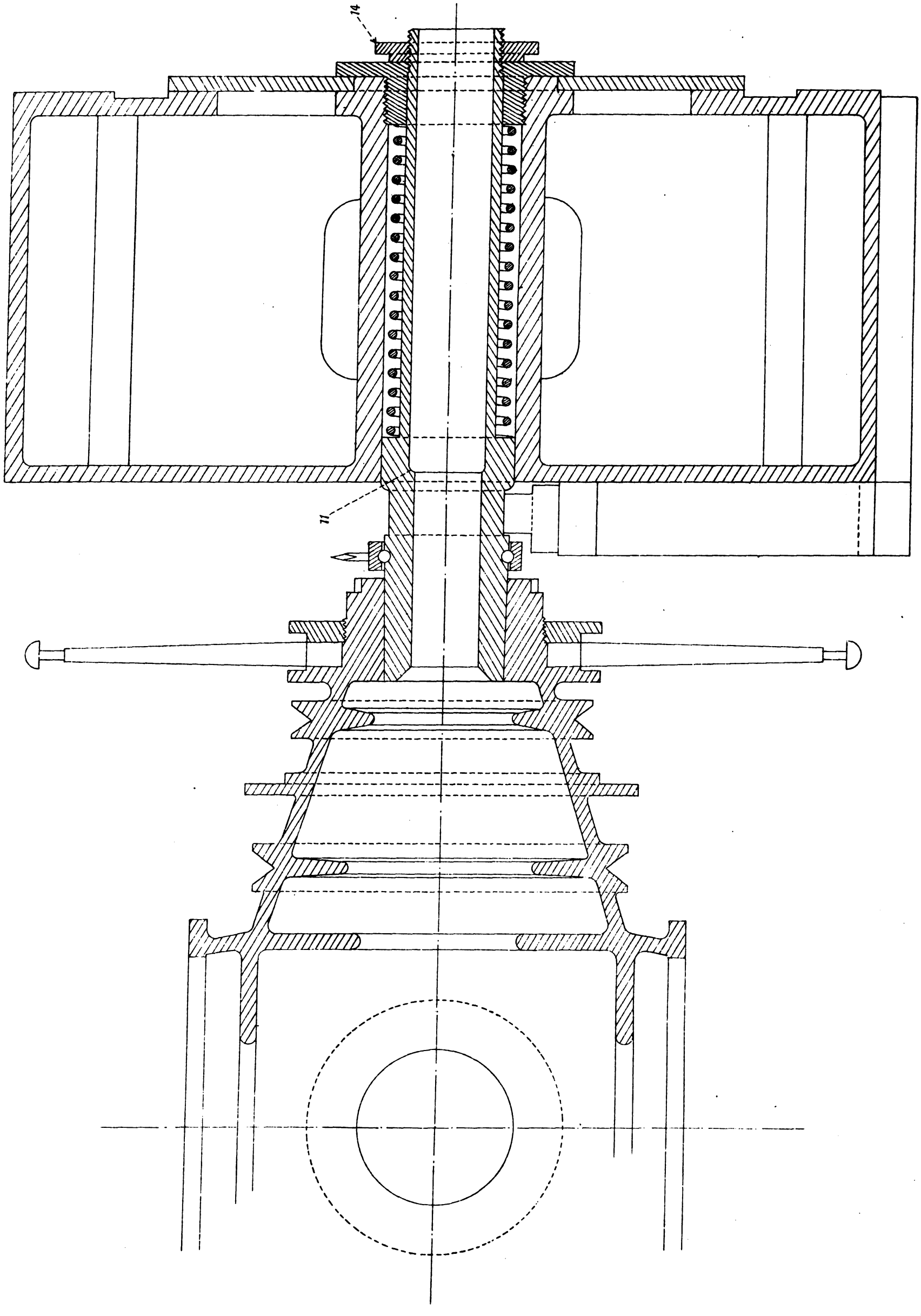

To face page 44.

2641.

Weller & Graham, Ltd. Litho, London.

Digitized by Google

Digitized by Google

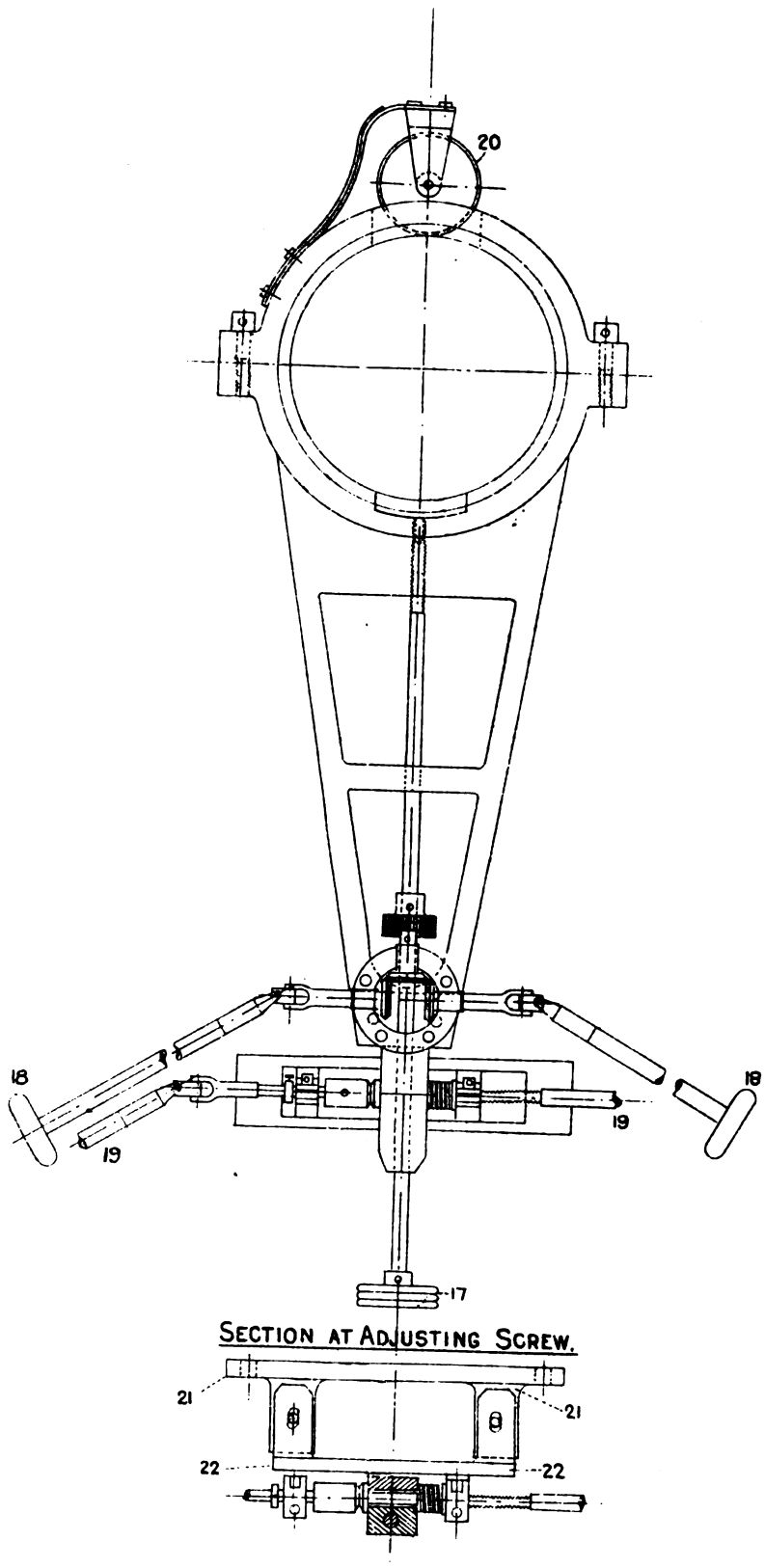

SECTION AT ADJUSTING SCREW.

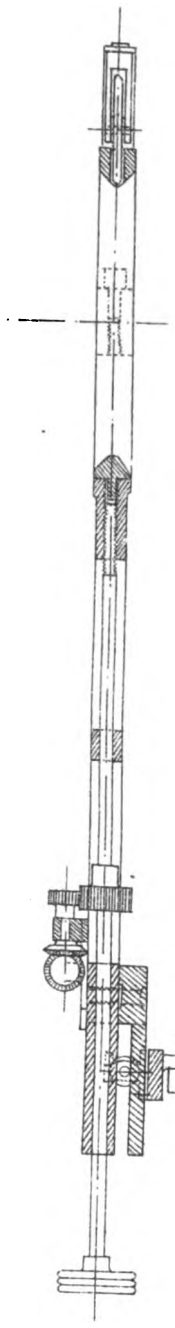

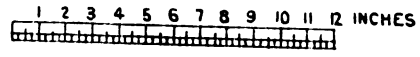

2641

To face page 44.

Weller & Graham, Lith London.

Digitized by Google

Digitized by Google

Digitized by Google

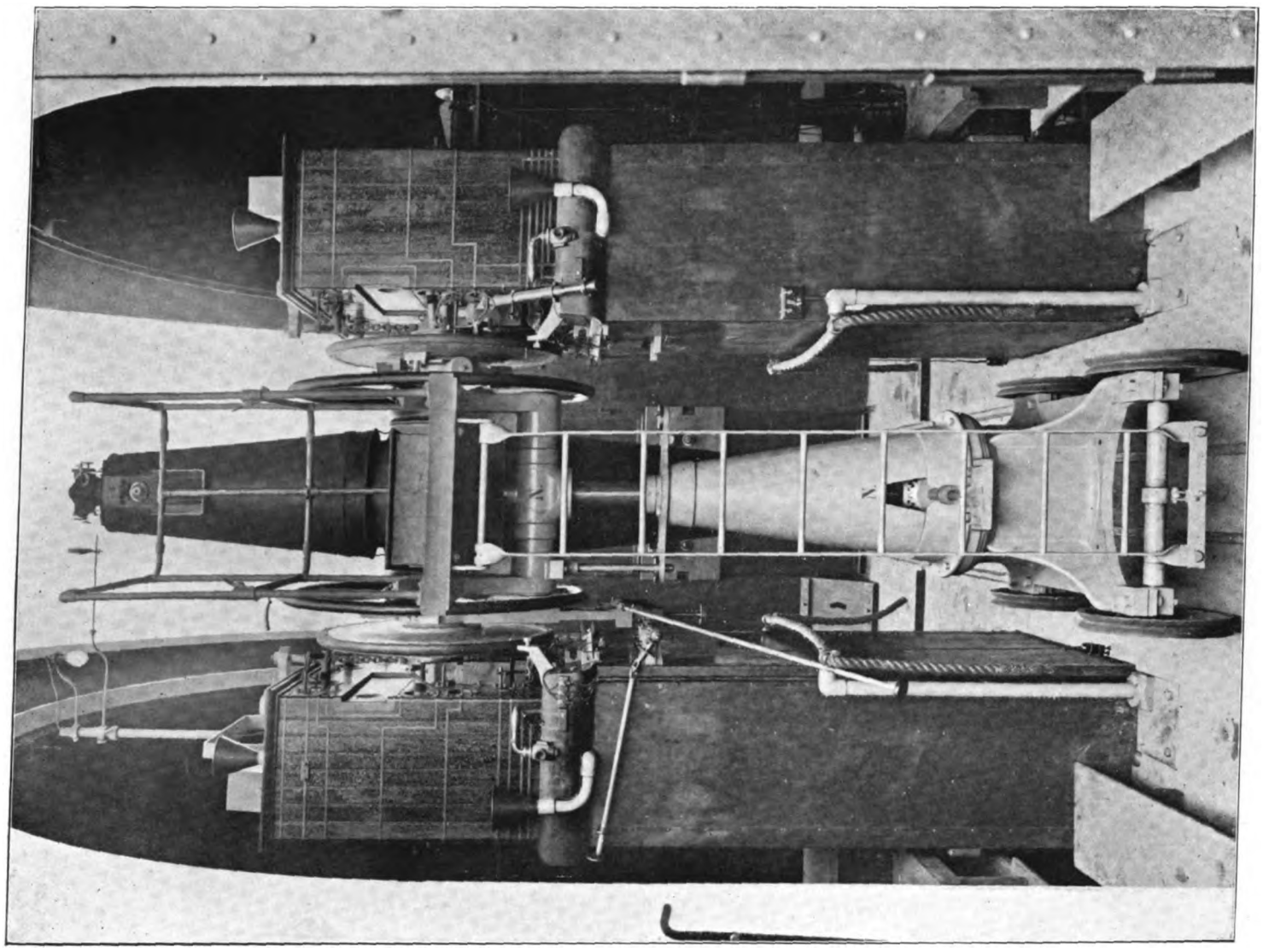

XIV.

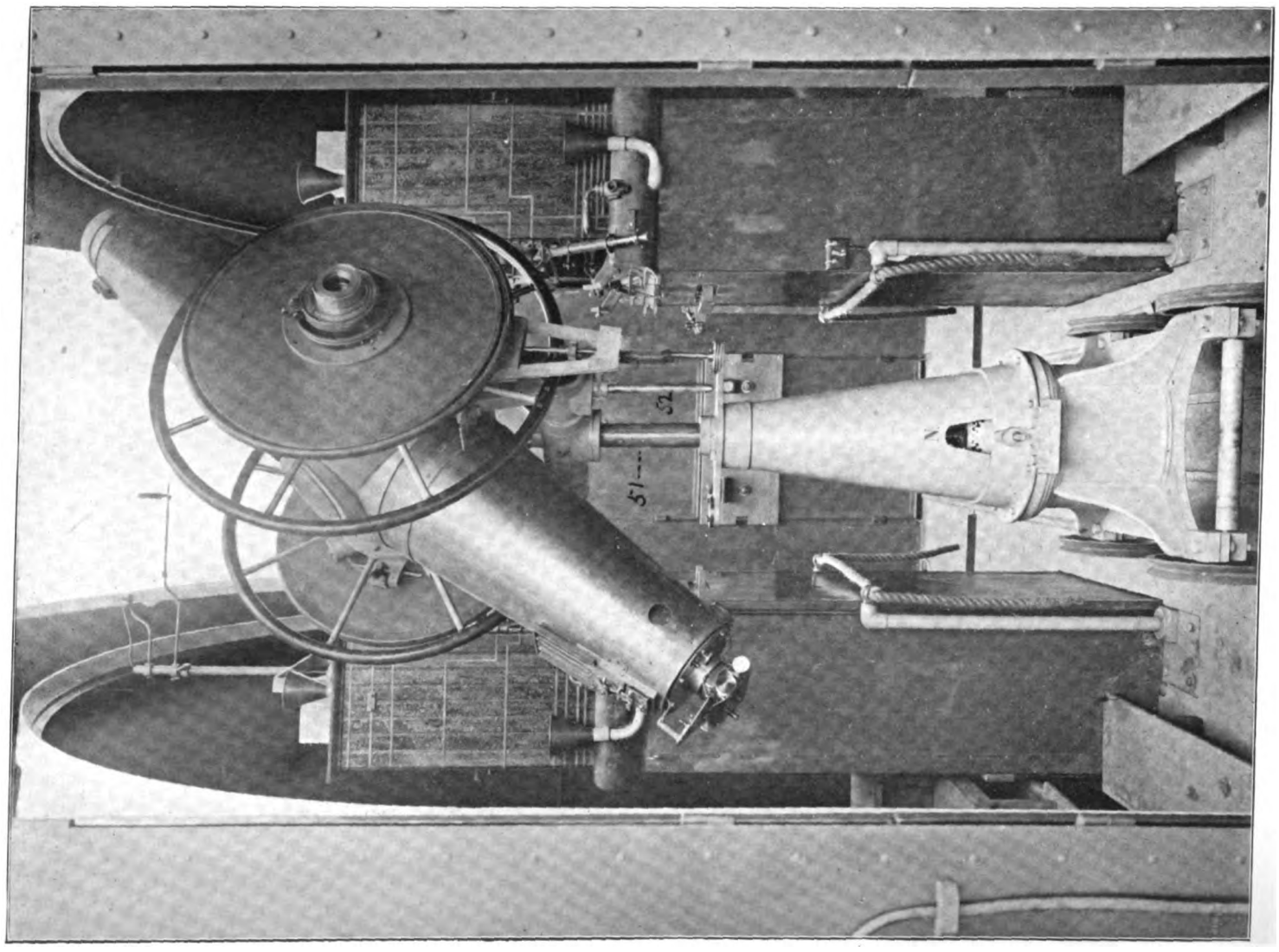

XIII.

[*To face Plates XI.–XII., before page* 45.

Digitized by Google

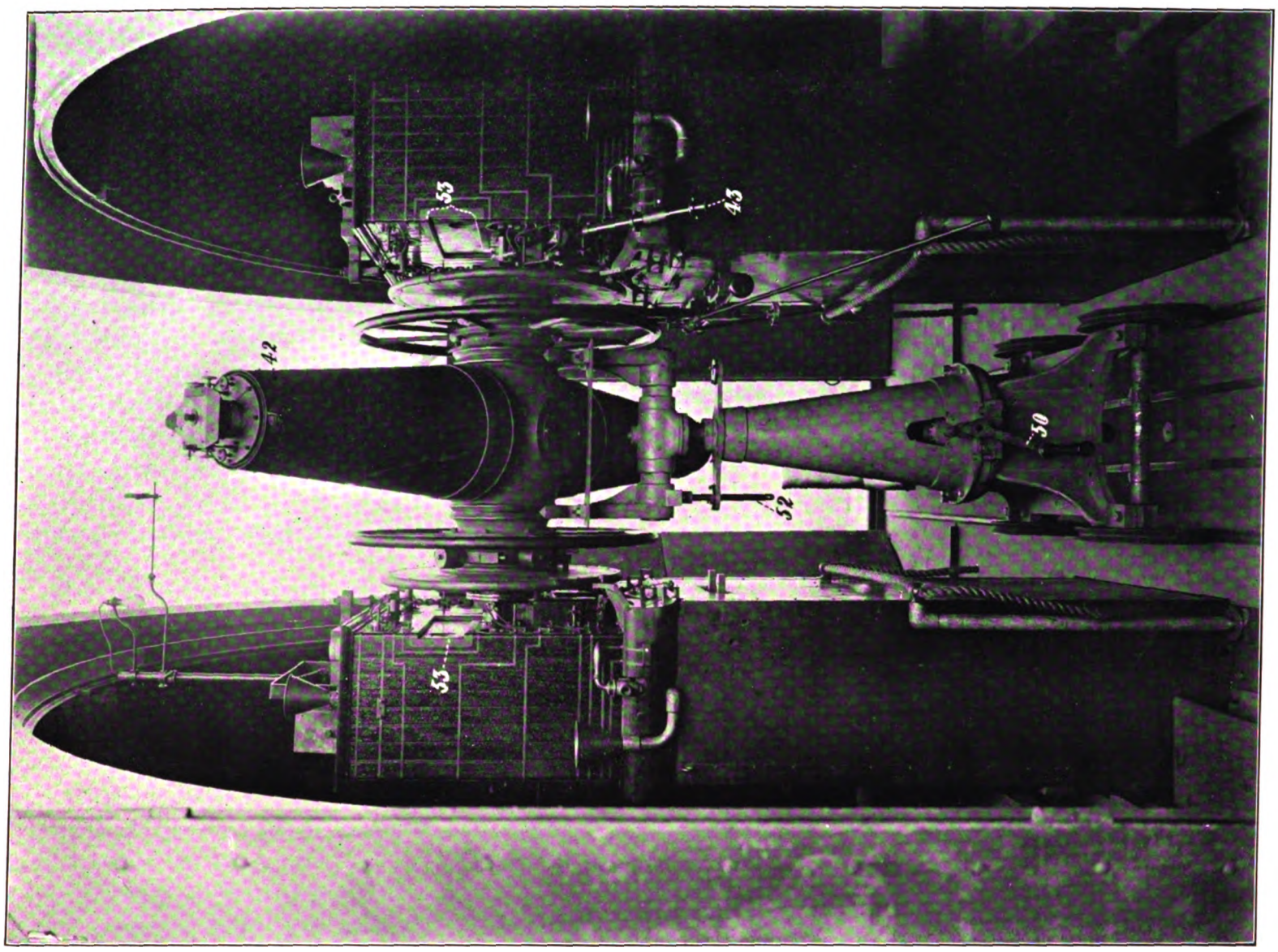

XII.

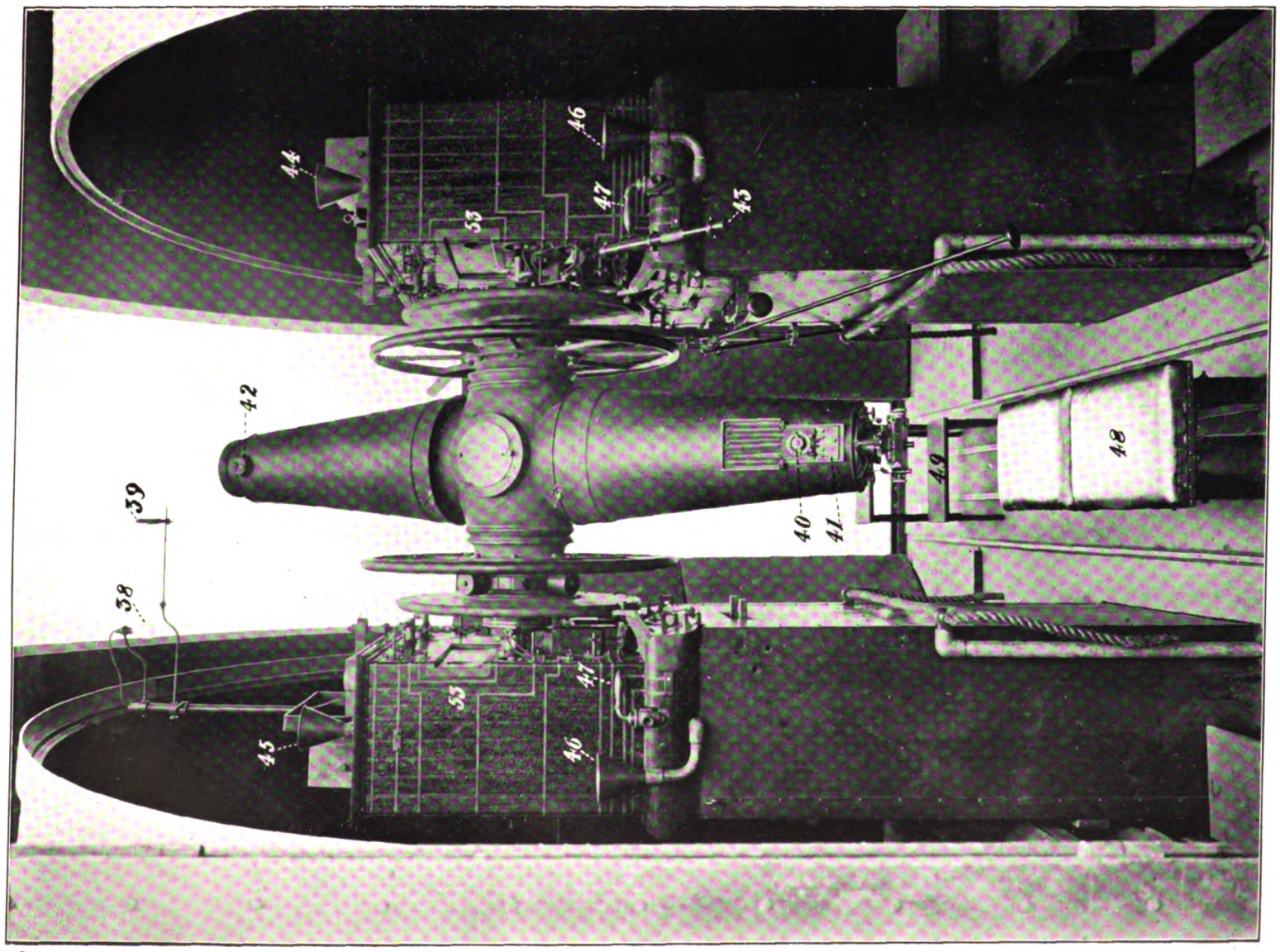

XI.

[*To face Plates XIII.–XIV.*

Digitized by Google

Digitized by Google

32 is the cone apparatus which (by means of the rod 33, the bevel-wheels 34, and the aluminium tube 35) transmits motion from the regulating motor 36 to the drum head of the Right Ascension micrometer, causing the latter to turn so that the travelling web moves across the field at any required rate (*e.g.*, the rate at which a selected star will move in transit). Detailed descriptions are subsequently given of the cone apparatus, the travelling wire micrometer, and the regulating motor.

37 is the iron pillar which supports the regulating motor. This pillar is divided into two parts, so that the upper part, together with the regulating motor itself, can, when the instrument is reversed, be removed without difficulty and be placed on the standing lower part of the corresponding pillar on the eastern side. The fittings for the electric connections are permanently brought up to the dividing-point on both pillars, so that the complete installation of the motor on the other side can be made in the course of a few minutes.

The cone apparatus is attached, in the manner shown, by three thumb-screws to the piece 10. It may be attached in the same way to the piece 12 on the opposite pier. It is only necessary in the first place to draw out the square rod 33 before transferring the cone apparatus, then, after reversal of the instrument and re-mounting of the cone apparatus on the other side, to replace the square rod.

Plate XI. is from a photograph of the instrument taken from the north.

The following points may be noticed which have not been dealt with in the description of previous plates :—

38 is an electric lamp. 39 is a lens which focusses the light of the lamp upon a small plate of parallel glass that can at pleasure be mounted on the eyepiece at an angle of 45° to the axis of the telescope when the latter is directed to the Nadir. This gives a much sharper image and far better definition than the Bohnenberger-eyepiece in determination of Nadir by the reflex method.

40 is the rheostat-switch which regulates the intensity of illumination of the field or of the wires.

41 is the switch which controls the current for illuminating the heads of the microscopes and the illumination of the wires in a dark field; there are switches similar to 40 and 41 at the other end of the telescope, for use when the object-glass and eye-end are interchanged.

42 is another switch, also existing at both ends of the telescope, which puts the spring that makes contact on the drum-head of the micrometer into circuit with the chronograph.

43 is the reader which we have mounted in a convenient position for setting the instrument to the required altitude.

44, 45 are the funnels for filling the upper iron boxes with water.

46, 46, similar funnels for filling the hollow iron piers with water.

47, 47, the stop-cocks for running off the water from the upper boxes; the stop-cocks for emptying the piers are below the observatory floor. The photograph also shows the brass strips on the mahogany casing which connect the small lamps for illumination of the circles with the small keys beside each micrometer head. The observer presses a key to illuminate the portion of the circle under the particular microscope. So soon as the division of the circle has been bisected, the removal of pressure on the key extinguishes the lamp; thus there is no unnecessary heating of the air in the neighbourhood of the circle.

48 is the observing chair, either half of which can be used as a back inclined at any desired angle to support the observer's head; 49 is a movable set of steps which enables the observer to reach the eyepiece when the telescope is pointed on the collimators or the Meridian marks.

The switch for starting or stopping the chronograph is mounted on the south side of the eastern pier, and is therefore not shown in the photograph.

The ropes mounted on iron stanchions attached to the floor have been found very convenient for pulling the observing chair into a convenient position when the observer is on the chair in a position for observing.

Plate XII. shows the reversing apparatus in the position for lifting the instrument. This is effected by turning the handle 50; the spindle that is so turned carries a bevel-wheel, which gears upon another bevel-wheel that is mounted upon a male screw cut upon the lower part of the cylinder 51 (Plate XIII.). When the axis is raised to a point that is marked upon the spindle 52, the pivots are then central with the slots 53 (Plates XI., XII.). The chains are then unhooked from the roller bearings, and the reversing apparatus, carrying the transit with it, is then rolled out towards the north, when the instrument can be reversed in the manner shown in Plate XIII.

Plate XIV. shows the reversing apparatus, with "the pulpit" mounted upon it for giving easy and comfortable access to the eyepiece in observing the Nadir.

Digitized by Google

The Collimators (Plates XV. and XVI.).

Plates XV. and XVI. show one of the collimators. It is impossible, within the limits of space of the collimator house, to obtain a photograph showing all necessary details in a single plate.

Plate XV. shows the eye-end and southern support of the south collimator; Plate XVI. the northern support and long-focus lens in its mounting.

The collimator object-glasses are of 6 inches aperture and 8 feet focal length, being in both respects identical with the object-glass of the Transit Circle itself. The tubes are of steel, with gun-metal rings or pivots, 1 and 2, which rest in bearings on the supports.

The two collimators are alike in every respect with one exception, viz. that in the case of the south collimator the axis of the micrometer screw is vertical, and in the north collimator it is horizontal; the former is used to make coincidences with the horizontal wire of the north collimator in determinations of Horizontal Flexure, the latter to make coincidences with the vertical wire of the south collimator in the determination of Collimation.

The eyepieces of both collimators are fitted with reversing prisms.

3 is the focussing screw.

4 is an arm attached to the gun-metal ring next the eye-end. This arm is loaded with the heavy weight 5, which, were it not for the screw 6, would cause the tube to rotate on its bearings. This screw, however, with its divided drum-head enables the observer to communicate a delicate and measured rotation of the tube about its axis. The object of this is to provide an easy and accurate means of measuring the inclination of the horizontal wire of the Transit Circle.

For this purpose the Transit Circle is turned upon the north collimator and pointed so that its horizontal web is nearly in coincidence with that of the collimator. Then, by means of the screw 6, the north collimator is rotated upon its axis till its horizontal web is parallel with that of the Transit Circle. A number of readings of the screw can be made, and the screw finally left at its mean reading.

Then the north collimator is viewed through the aperture in the axis of the Transit Circle by the south collimator, and the horizontal wire of the latter is brought by the micrometer to near coincidence with the horizontal wire of the north collimator; then, by means of the screw 6 of the south collimator, the horizontal wire of the latter is made parallel to the horizontal wire of the former. Lastly, the Transit Circle is turned upon the south collimator, when the horizontal wires of the two telescopes will make an angle with respect to each other equal to twice the angle between the axis of rotation of the Transit Circle and the horizontal wire of the collimator. This angle may either be measured by means of the screw 6 of the south collimator or by making coincidences between the image of the horizontal web of the collimator and the horizontal web of the Transit Circle at known opposite distances from the line of Collimation and taking the Declination micrometer readings for these coincidences. The latter method has been generally adopted.

The inclination of the axis of the Transit Circle is known, and, if it is sensible, is added to the derived inclination of the web. This method is very much less laborious and far more accurate than is the derivation of the inclination of the wire from the observation of Declinations at small hour angles.

7 is the lens, in the focus of which the south mark is mounted at a distance of 235 feet. In the case of the north mark this distance is 295 feet.

8 is the screw-head, by which this lens can be traversed in its slide until the microscope 9 shows that the requisite adjustment of the optical centre of the lens 7 over the underground mark is obtained in the manner subsequently described.

10 is the microscope for reading the scales by which the movement of the lens 7 relative to the underground mark is measured.

11, 11 are V-shaped notches cut in the projections on the iron lens-mounting into which a cylinder can be laid and its horizontality tested by a striding level. The object of this is to ascertain whether the horizontality of the slide changes sufficiently to produce any sensible variation in Azimuth between the optical centre of the lens 7 and the illuminated disc on the slide.

Mountings of the Long-Focus Lenses and Meridian Marks (Plate XVII.).

The method of mounting the long-focus lenses is shown on Plate XVII., as constructed by Troughton & Simms in accordance with working drawings made by H.M. Astronomer.

Digitized by Google

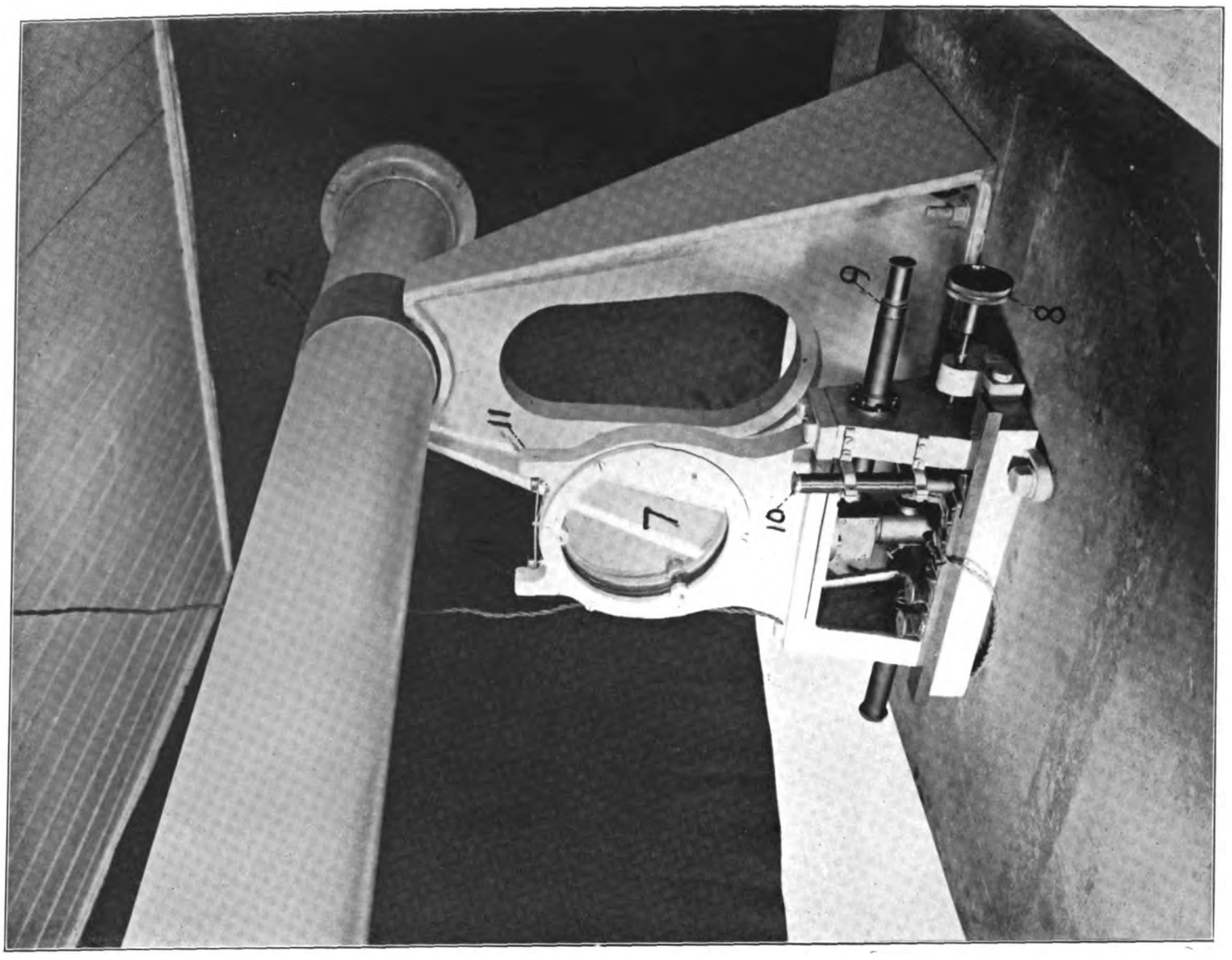

XVI.

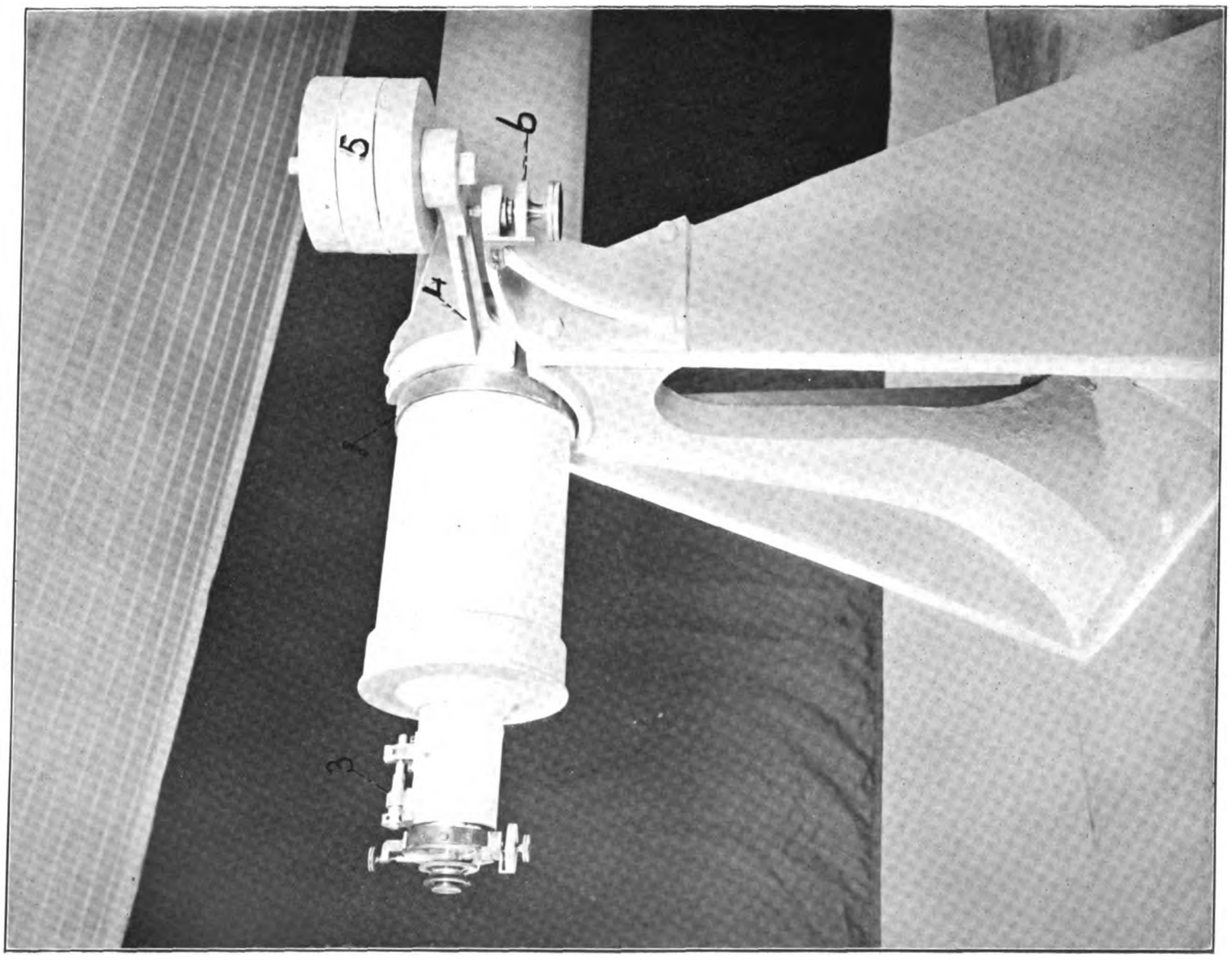

XV.

[*To face page* 46.

Digitized by Google

Digitized by Google

Digitized by Google

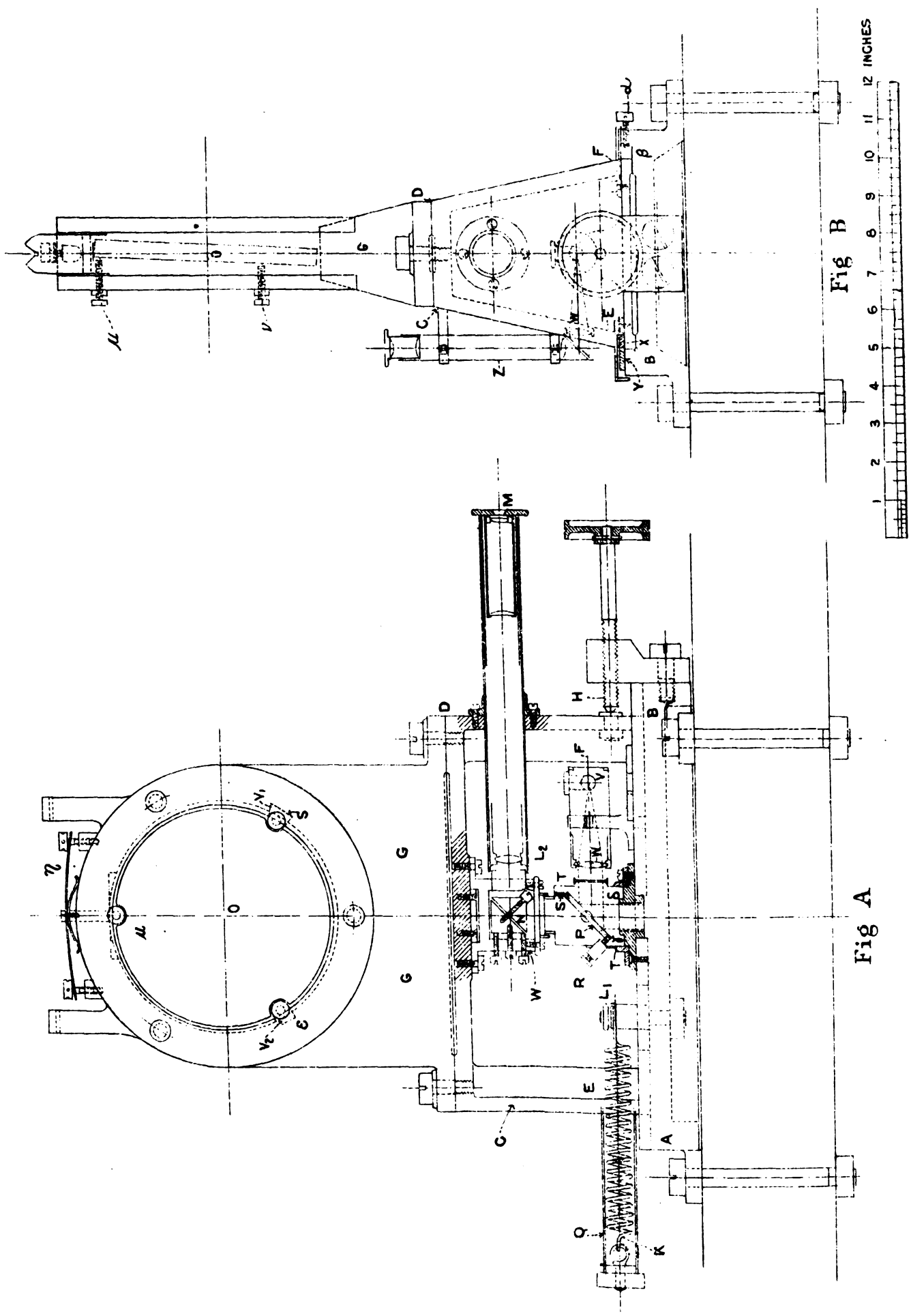

To face page 47.

2641.

Digitized by Google

Fig. A shows the apparatus viewed from the south, fig. B from the east.

A B is a strong iron casting, the three feet of which are bolted to the heavy slate slab on which the stand of the collimator is mounted.

The frame C D E F moves in bearings planed and ground with care. The conical point of the screw α enters a hollow cone in the block β (fig. B) near one end of the slide, and there is a similar screw and block near the further end of the slide. By these means a perfectly smooth movement of the frame, entirely free from shake, is easily secured.

Q (fig. A) is a tube screwed into the side E C of the moving frame, carrying at its extremity the hook to which one end of the spiral spring K is attached; the other extremity of K is attached at L to the iron base A B. This powerful spring forces the slide against the polished end of the screw H, so that the most delicate motion can be communicated to the slide with certainty and precision by means of the screw. The spider webs which were originally employed were mounted at $\gamma\delta$ (fig. A), and illumination was provided, as in a Bohnenberger-eyepiece, by light from the small incandescent electric lamp V falling on the lens W, and thence reflected from the first surface of the transparent parallel glass plate P, the exact adjustment of which was made by means of the spiral spring S and the screw R and by rotation of the cylindrical brass box T T (in which P is pivoted) about its axis. The spider webs were viewed by means of the microscope M L and the prism of total reflection N, the latter being mounted in the iron box W and provided with the necessary adjusting screws, as shown.

When the use of spider lines was abandoned in favour of the small hole and wire, already described (p. 40), the plate of metal, containing the hole and carrying the wire, was attached to $\gamma\delta$, and the plate P was removed.

At X (fig. B) is shown a section of a scale graduated on a silver bar to 1 mm., and reading by estimation relative to a scale of 1 mm. sub-divided to 0·1 mm. on the block Y to 0·01, or even 0·005 mm., by the powerful microscope Z. This scale is also illuminated by the same lamp V, in the manner shown in fig. B.

G is an iron casting of the form shown in figs. A and B, which is attached to the slide C D E F to carry the long-focus lens O.

The edge of the lens is rounded, so that it rests on the bearings ϵ and ζ (fig. A) and is pressed against these by the spring η.

The screws at μ, ν_1 and ν_2, acting against opposing spiral springs, serve to centre the lens upon the Meridian mark. This operation is accomplished in practice with the aid of a centring telescope (see *Encyclopædia Britannica*, vol. xxiii. p. 153, fig. 35).

Mountings of the Object-Glasses which are fixed at the bottom of the Pits (Plate XVIII.).

The method of mounting the object-glasses, whose optical centres form the marks of reference at the bottom of the pits, is shown in Plate XVIII.

A is a section, through the prime vertical, of the bottom of the cast-iron lining of the shaft which is imbedded on the solid unweathered rock.

B B are projecting rails running north and south, cast as part of the 3-inch-thick bottom of the flanged iron tub that forms the bottom of the lining of the shaft. These rails support the planed parallel square iron plate C, to which the mercury-trough D is attached.

The rails B B are 14 inches in length, in order to leave some margin of error in original fixing of the axis of the pit.

After the long-focus lenses and marks were definitively fixed on the collimator piers, the plate C was shifted on the rails B till its centre, as determined by a plumb-line, was vertically under the mark or under the centre of the long-focus lens. Then the rail was chipped away with a chisel, leaving only two projections on one rail and one projection on the other, such that the plate C might rest on three points, two of which are near the corners of one side and one near the middle of the opposite side of C. These projections were then filed and scraped until, when C C was laid on these points, its upper surface was perfectly horizontal. The plate C C was then bolted to B B by three bolts, one of which is shown at H.

The mercury trough D is of cast iron, accurately turned and finished on all its surfaces. Three screws, one of which is shown at K, pass through the bottom of D and support the sleeve E, into which the focussing tube F very accurately fits; the latter carries the object-glass G.

Digitized by Google

In the lower edge of E there are ∧-shaped radial slots into which the rounded ends of the screws K enter. The lengths of the screws K and the depths of the slots were carefully adjusted, so that when the upper surface of C is level the upper flange of F is also level, and therefore, if the object-glass is well centred in its cell, its axis will be nearly vertical and will certainly be in sufficiently good "squaring adjustment."

The final process of adjustment is first to accurately focus the object-glass G so that the small hole and wire carried at $\gamma\,\delta$ (Plate XVII.) are in its principal focal plane. This was done on each object-glass by sliding F in the sleeve E (Plate XVIII.), making trials at different distances between the flanges at *m* and *n*. When the best focal adjustment was secured the tube F was clamped by a screw at P. Then D was carefully centred by tapping so that when the axis of the long-focus lens was accurately centred with the axis of the telescope of the Transit Circle, the image of the illuminated disc on the slide of the long-focus lens was bisected by the wire on the slide. This done, the circumference of D upon C was traced with a sharp point, and then D was permanently attached to C by three screws, one of which is shown at Q. The circular trough in D, in which the foot of E stands upon the three screws K, was then nearly filled with mercury. This has the effect of rendering the space between the object-glass and the pool of mercury nearly air-tight, and effectually excludes dust, so that the surface of the mercury remains for a long time bright without cleaning. If need should arise for cleaning it, one has only to lift the object-glass and the pieces E and F together, to get access to the mercury, and with the certainty of being able to replace the whole in identically the same position. The mercury in the circular trough also effectually prevents the surfaces of the radial slots and the ends of the screws from rust. All the rest of the iron work was then painted *in situ*.

The object-glasses under the marks are similarly made and adjusted.

The design and working drawings for the object-glass mountings were made by H.M. Astronomer, and the work was executed at H.M. Dockyard, Simon's Town.

The Travelling Wire Eye-End (Plate XIX., figs. *a*, *b*, *c*, *d*).

Many plans for observing stars in Right Ascension other than the ordinary "eye and ear" and "chronographic" methods have been proposed with the object of eliminating the "personal error" to which these observations are subject. This "personal error" depends upon a temporary habit of observing, which varies with the state of the observer's health, upon the velocity of the apparent motion of the star, upon the direction of motion (right or left) across the field, and upon the star's magnitude. In the design of a new fundamental Transit Circle it was obviously desirable to consider all these proposals, because unquestionably such variability in the "personal equation" is one of the chief outstanding difficulties in exact Meridian work.

All these proposals have been of two distinctive types :—

A. To cause a wire in the field of view to move so that the wire shall appear at rest with respect to the star; the revolving head of the micrometer screw that causes the wire to travel being fitted with electric contacts, which automatically register on a chronograph the instants when the star is at known angular distances from the line of Collimation of the instrument.

B. To allow a star to photograph a trail on a plate in the focus of the telescope and to interrupt the action of the star's light upon the plate by a shutter worked by an electro-magnet, the currents for which are sent by the clock at known instants of "clock time." If now the line of Collimation of the instrument is in some way marked upon the plate (for example, if the webs are photographed upon it) the angular interval between the star and the line of Collimation at the beginning and end of each interruption of the light can be measured.

I was very anxious, if possible, to test both methods, and for this purpose arranged to have a Taylor-3-lens object-glass as made by T. Cooke & Sons of York, which is almost perfect in its chromatic correction, and can therefore be used practically at the same focus for photographic and visual purposes. But, after some experience of an 8-inch object-glass of this construction which Messrs Cooke made for our old Transit Circle, it was found that such object-glasses are not suitable for use in transit instruments. Their large field, their freedom from coma, the sharpness of the images, and the collection of all visible rays to a common focus are admirable qualities; but the deep curves of the central flint lens render the combination liable to very marked change of focal length when there is a comparatively small difference of temperature between the two outer lenses and the central one. In practice, it was sometimes found that whilst in the beginning of the evening's work the reflex images of the webs in the Nadir observation were formed in perfect coincidence with the plane of the webs themselves, at a later stage of the work there would be such a change in the focal length that when the webs were in sharp focus the eyepiece had to be moved more than quarter of an inch to focus their reflex images. Experiment showed that when all the lenses

Digitized by Google

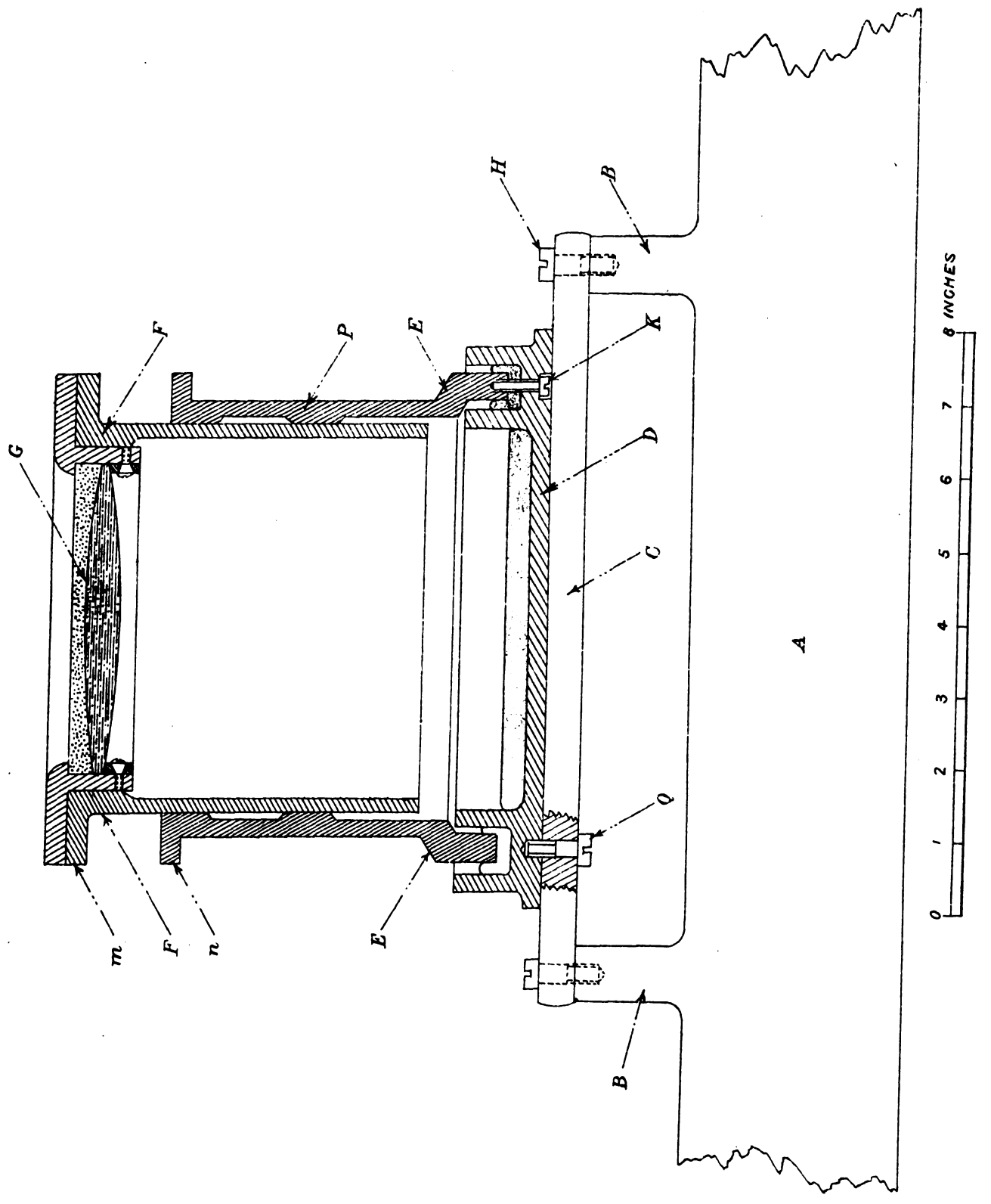

To face page 48.

Digitized by Google

Digitized by Google

are at a common temperature, the change of focus is very nearly identical with the change of length of the iron tube, and that consequently the normal focal setting remains practically constant; but a very small difference in temperature between the crown and flint lenses, such as may easily occur during observation, creates such serious change in the focal length as to unfit that description of object-glass for use in any kind of astronomical instrument where it is essential that the focal length should be constant—*e.g.*, the transit circle and the heliometer.

I had therefore, very reluctantly, to give up the 3-lens object-glass, and Messrs Cooke exchanged it for a most excellent one of the same aperture of the ordinary 2-lens form, which seems to be quite free from the defect in question.

This experience interfered with my original intention of working out a photographic method of Meridian observing.

Unquestionably, successful results have been obtained by photographic methods, but at the expense of considerable inconvenience. The taking and subsequent development and measurement of plates of single trails is a time-consuming operation, and trails of stars cannot be observed in daylight; so that, unless the photographic process can be conveniently combined with some kind of visual process, it would neither be possible to observe stars near the sun nor planets in daylight.

Unless the ratio of aperture to focus is very large, trails could only be obtained of the brighter stars; and it is not possible at present to obtain lenses of large aperture in proportion to their focal length which give good visual and photographic definition at the same focus.

For these reasons the idea of combining photographic with visual methods of observation had to be abandoned.

In the *Astronomische Nachrichten*, No. 2828, Dr J. Repsold proposed the use of a transit instrument capable of limited parallactic motion; so that, if it were driven by clockwork and its hour angle automatically registered on a chronograph at short intervals, a star apparently at rest in the field of view would automatically register the clock times when the wire reached certain hour angles. If, by suitable delicate slow motions applied by the observer, the star could be kept constantly bisected, an ideal method of observing transits would be attained. But the instrument would of necessity become very massive, and the difficulty of accurate determination of the instrumental corrections be so great that the method was never put in practice.

In the *Astronomische Nachrichten*, No. 2940, Dr Repsold proposed a method of Meridian observing which consists in causing a web to follow the image of the star in transit by motions communicated by the observer's hands alone, whilst electric contacts on the drum of the micrometer screw register on the chronograph the instants when the star is at corresponding known intervals from the line of Collimation.

The purpose of his paper was to show that if the axis, which imparts motion to the slide on which the travelling web is mounted, is provided with two discs at its extremities, so that the observer can use the thumb and finger of both hands in rotating it, there is no difficulty, after a little practice, in keeping the web constantly bisecting the star, and the mean of the absolute errors in following the star becomes nearly zero.

In the *Astronomische Nachrichten*, No. 3377, Repsold gives a detailed description of two forms of eye-end of transit circles, fitted with means for observing in this manner, to which he gives the name of "the impersonal micrometer."

This method of observation has since been very successfully employed under Professor Seeliger at Munich, in an extensive series of Meridian observations, and, under the auspices of the Geodetic Institute at Potsdam, in Telegraphic Longitude operations.

One evening in 1896 I had an opportunity of trying the method at Messrs Repsold's with a portable transit instrument mounted on the roof of their workshops in Hamburg. I was not convinced by that trial of the advantages of the method, but must now admit that my feeling of disappointment was largely due to want of previous practice. I felt an undue sense of strain, which to a large extent passes off with more experience of the method; but I had the instinctive feeling that, if a satisfactory method of communicating the chief motion by clockwork could be devised, leaving to the observer only the task of perfecting the guiding, a decided advance in accuracy and in ease of observing could be attained.

Under the date March 1901, Dr Struve published in the *Astronomische Nachrichten*, No. 3719, an account of the application of clockwork as an aid in Repsold's method. Unfortunately, this communication escaped my attention until the publication of Dr Cohn's paper on the same subject, *Astronomische Nachrichten* for 1902, No. 3767.

The method consisted in having motion transmitted to the micrometer screw from an axis that is turned by a disc which presses upon a cone revolving uniformly by clockwork. The velocity of rotation of the micrometer

Digitized by Google

screw could therefore be varied for stars of different Declination by varying the distance from the apex at which the revolving disc presses upon the revolving cone.

I wrote to Dr Cohn on the 15th March 1902 as follows:—

"I have studied your paper with the greatest interest and satisfaction, because I believe that you have given an absolute proof that the Struve-Repsold method of observing transits has completely solved a problem which is of the greatest importance in refined practical astronomy.

"From the point of view of one who has not seen the apparatus, nor even a drawing of it, I venture to send you the following notes, first of all pointing out what seem to me its chief deficiencies, and secondly indicating how I think it might be improved.

"Its defects appear to me:—

"1. The irregularities to which a clock of continuous motion is liable in changed positions with respect to the vertical. I imagine that some form of governor on the principle of Foucault's governor is employed—depending on revolving weights, springs, and expanding fans.

"2. The uncertainty of friction-contact on a cone and the liability to slip seem to me considerable, and also that it must be very difficult to adjust the scale which changes the velocity with the necessary accuracy.

"3. The disturbance of the rate of the clockwork when the screw is turned independently of the clock, because the attachment of the screw to the clock depends on friction, and any independent motion must increase or diminish the force acting on the governor.

"4. The undesirability of attaching a clock weighing three kilos to the eye-end in a position necessarily unsymmetrical with the axis.

"My suggestions are:—

"(*a*) Instead of a clockwork attached to the eye-end, employ a small shunt-wound electro-motor attached to the cube of the instrument, and transfer its motion to the eye-end by means of a light revolving rod.

"(*b*) Instead of a cone on the axis of the screw for changing its velocity of rotation, let the rod coming from the electro-motor terminate in a toothed wheel or pinion acting on a toothed wheel fitted loose on the axis of the screw, but provided with sufficient spring-friction to turn the screw and yet to enable the screw to be turned independently of the revolving wheel (this friction setting would only be used for preliminary pointing), and provide means to change the velocity of rotation of the rod.

"The property of a well-made shunt-wound electro-motor is to preserve the same speed of rotation under considerable change of load (or work done) so long as the electro-motive force of the battery remains constant, and to vary its speed nearly in proportion to the electro-motive force of the battery. Now, it is easy to provide a very nearly constant electro-motive force by means of good accumulators, and to vary the electro-motive force of a given current by the introduction of resistances. It is also easy to make resistance, with a numbered dial, which would give 100 different resistances, any one of which could be used at will, and this resistance regulator could be attached to and move with the observing chair. I think it would be easy enough to change the speed of the motor from 1 to 4 by means of resistance only. By means of change wheels it would be easy to change the velocity of the terminal pinion of the rod from 1 to 4; that would give a total change of 1 to 16, and by other change wheels 16 to 64. This range of 1: 64 would correspond with a range of Declination from 0° to 89°.

"The change of resistance could be reduced to smaller steps by the use of two or more dials, so that the most perfect adjustment of rate could be obtained, and experiment would give the precise resistance and change wheel-setting requisite for following a star of any Declination.

"(*c*) For delicate keeping of the star on the travelling wire during transit it would be easy to add to this apparatus a pair of Sun and Planet wheels on the plan of Grubb's slow motion in Right Ascension. When one of these wheels is stopped, by pressure of the armature of an electro-magnet, the velocity of rotation of the axis is increased 5 per cent., and when the other wheel is similarly stopped the velocity of rotation of the axis is diminished 5 per cent. Thus the observer, by tapping on one or other of two keys, held in the hand, could give a delicate motion of the travelling wire with respect to the star. The Sun and Planet wheels for slow motion could be attached to the cube.

"(By a more elaborate arrangement it would be possible to arrange resistances acted on by a rubbing spring on the circle so that the resistance would be automatically changed to give the right speed by the mere setting of the telescope, but it would involve considerable complications which could be avoided by use of the plan I propose.)

"There is still another plan, viz. to use one of Kelvin's rheostats, in which the resistance is changed by winding a long platinum wire from one barrel on to another. With such an apparatus the observer could not only set the rheostat to give the required resistance very approximately, but by turning the rheostat he could keep the star bisected by the travelling wire. I prefer, however, to use the Sun and Planet slow motion, because in that way the velocity of the motion of the motor would not be changed, and the observer would only apply such small corrections as are due to errors of pointing, irregularities of the screw, or vibrations of the image produced by irregular refraction.

"I have a good many other ideas to facilitate the application of the method, especially in regard to observing both R.A. and Decl. at the same transit; but I should be glad in the first place to hear what Prof. H. Struve and you think of the above suggestions, as, not having seen any detailed account of your apparatus, I may be in error about some of its advantages and disadvantages."

Dr Cohn, in reply to this letter, seemed to attach comparatively little importance to accurate going of the clock-work—he used the clock only as an aid; he lets the clock go a little slow, and keeps up the bisection of the star by hand.

I wrote on the 9th June 1902 to Repsold's, enclosing a copy of my letter to Dr Cohn, giving the sense of his reply, expressing the view that a great advance could be made on the Konigsberg method, and asking if their firm would undertake to make a new eye-end for our Transit Circle, and the necessary change-wheels, etc.

Dr Repsold replied that "the addition of a clockwork was neither necessary nor desirable in the use of his unpersonal micrometer; that if a clock was used at all it should be mounted independently of the instrument, not

Digitized by Google

Digitized by Google

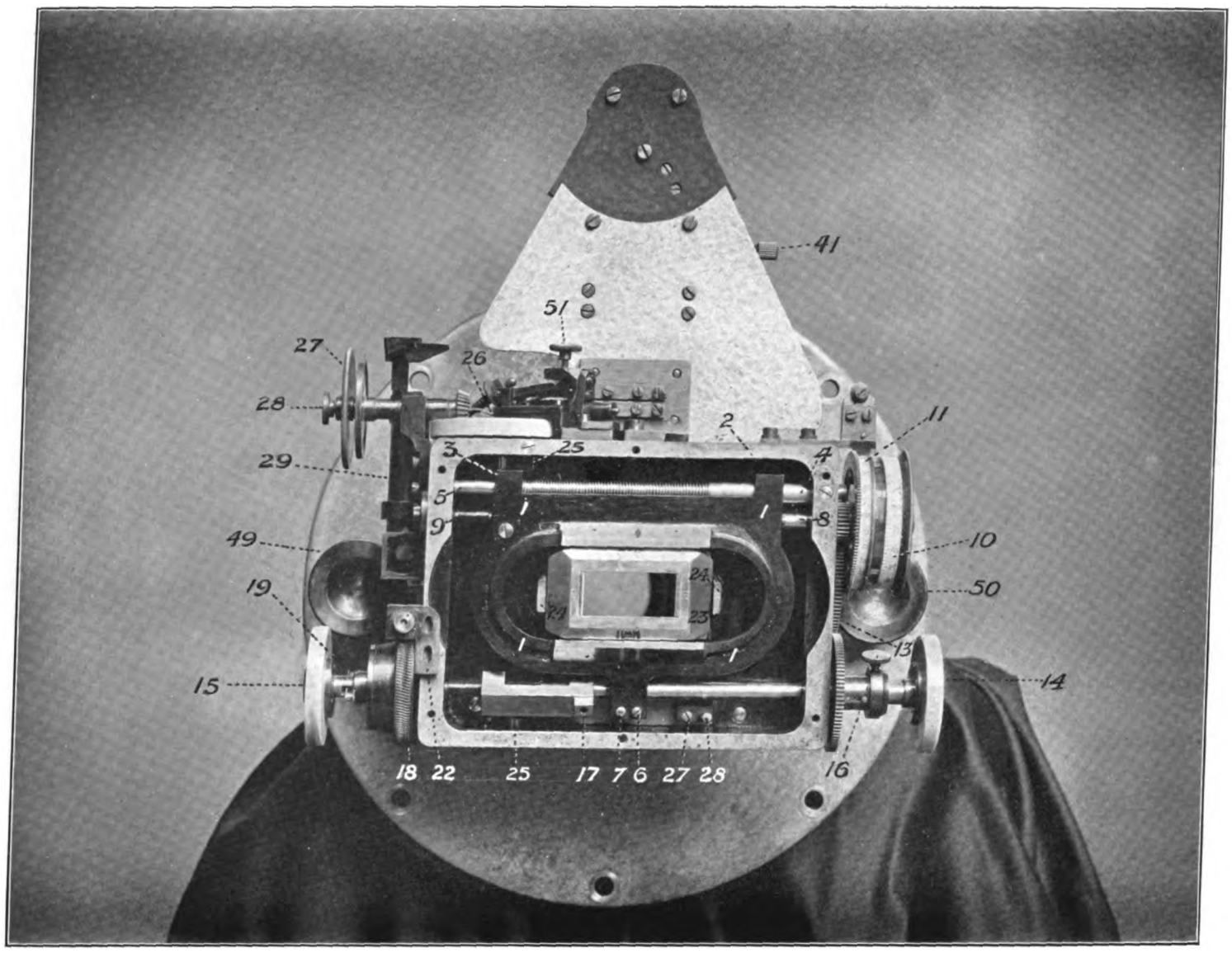

FIG. *a*.

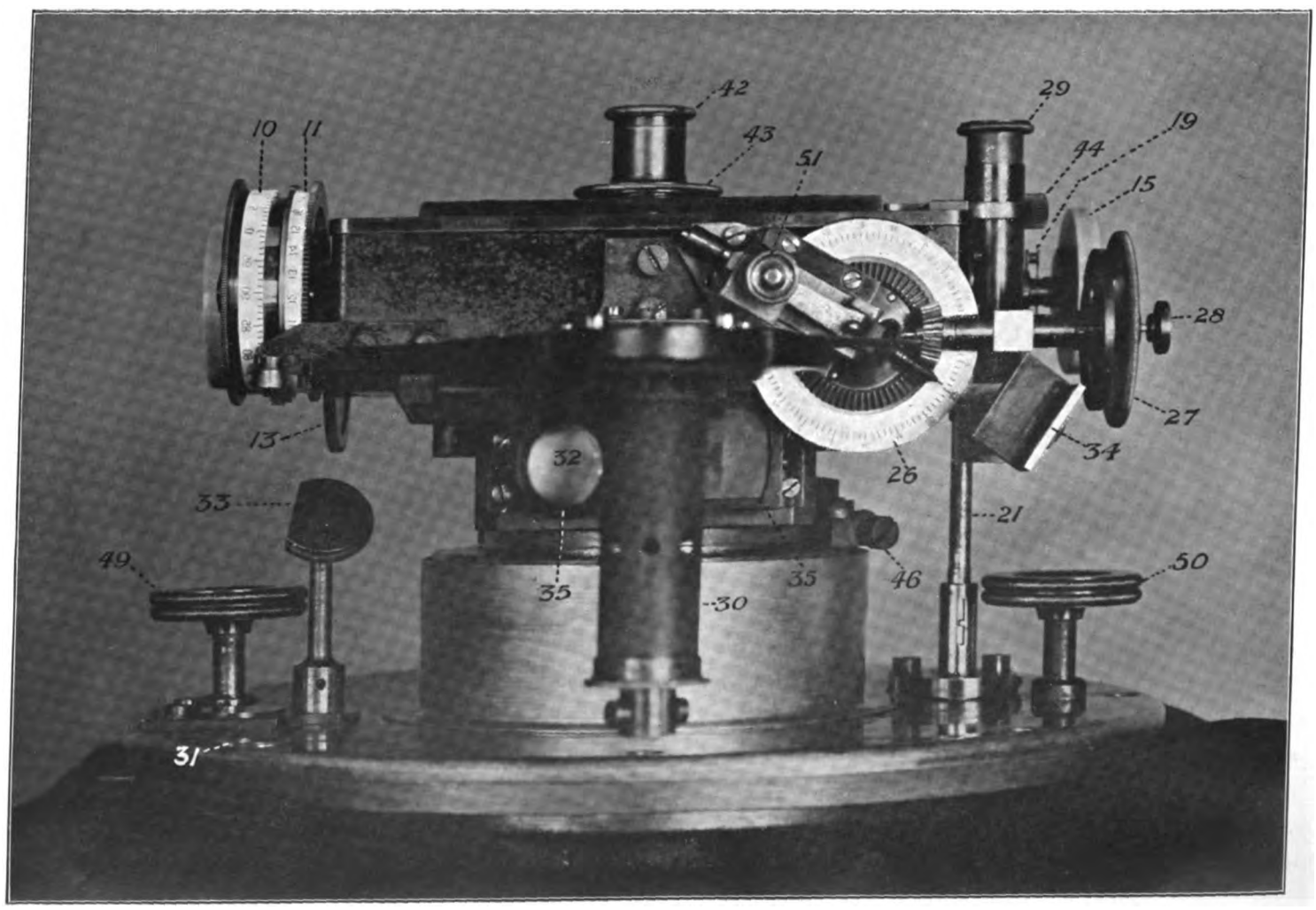

FIG. *b*.

[*To face Plate XIX., c, d, page* 50.

Digitized by Google

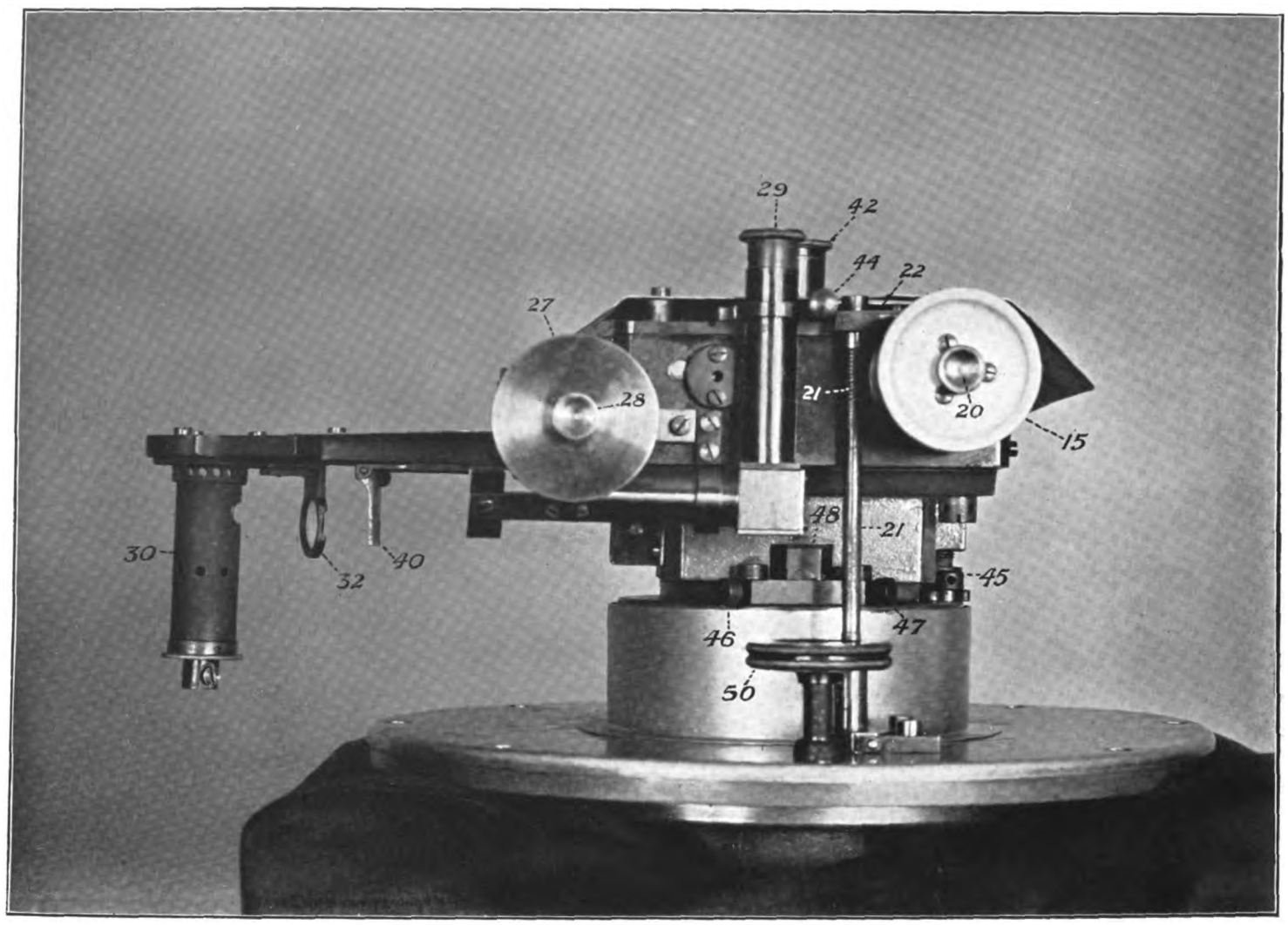

FIG. *c.*

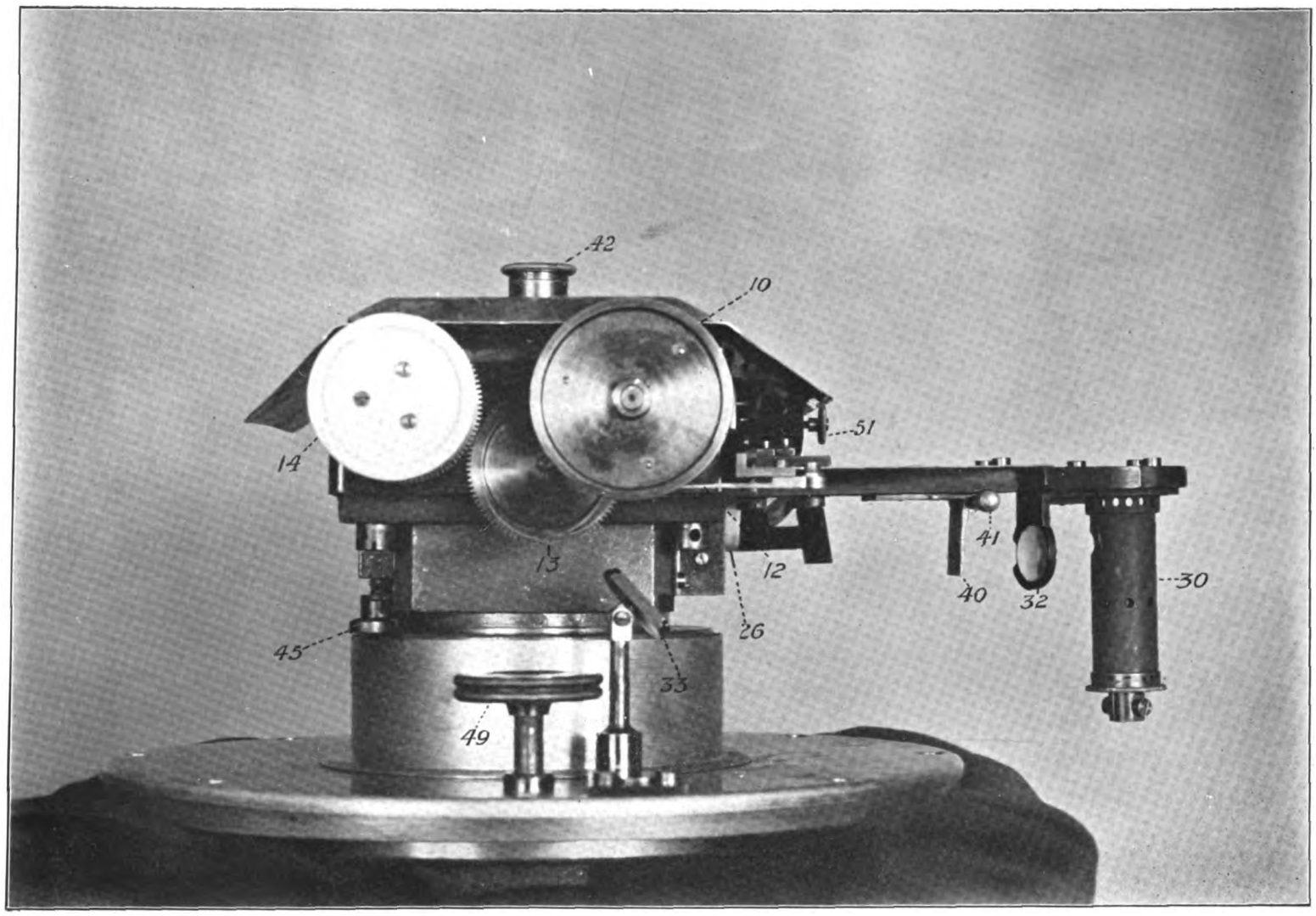

FIG. *d.*

[*To face Plate XIX., a, b, page* 50.

Digitized by Google

Digitized by Google

fixed to the tube or axis at all, but be connected with it only by a light rod passing through a perforation in the pivot, a second rod leading to the eyepiece."

Dr Repsold declined to have anything to do with making the change-wheels, etc.; but on my promising to give a trial to the use of the Repsold method both without as well as with clockwork, he finally consented to make the tangent screw necessary for communicating motion from the spindle.

In November 1902 the original eye-end of the Transit Circle was sent off to Messrs Repsold to enable them to gauge accurately the adaptation of a new eye-end carrying an "unpersonal micrometer" of their latest design.

The completed "unpersonal micrometer" was received from Messrs Repsold in the end of 1904, and observations with it were begun early in 1905.

The apparatus is shown in Plate XIX., figs. *a*, *b*, *c*, and *d*.

Fig. *a* represents the eye-end, the moving slide which carries the eyepiece and the cover of the micrometer-box being removed.

Fig. *b* gives a side view of the micrometer, the nickel shield being removed which protects the eyepiece-slide from the moisture arising from the breath and nostrils of the observer.

Figs. *c* and *d* give end-views of the instrument and show the nickel shield.

1 (fig. *a*) is the frame which carries the travelling wire. Its motion is guided by the rod 4, 5, and by the screws 6 and 7. The polished point of the screw 6 bears on a plane surface on the bottom of the box; the head of screw 7 bears upon the under side of the cover of the micrometer-box. These screws can thus be easily adjusted to make the movable web move in a plane parallel to the fixed webs, and at the same time to eliminate any movement of the slide about the axis of the cylinders 4, 5. The rod 4, 5 is cylindrical, but of two different diameters. The bearing at 2 fits the larger, that at 3 the smaller diameter. The difference of diameter of these two cylinders forms a shoulder between which and the bearing 3 is the strong spiral spring, shown in fig. *a*, which presses the slide always towards 5.

8, 9 (fig. *a*) is a steel spindle which terminates towards 9 in a carefully finished screw working in the slide 1, and beyond 8 passes through the side of the micrometer-box terminating in the drum-head 10. The spiral spring on 4, 5 thus forces the polished end of the micrometer-screw against its end-bearing, so that the readings on the drum-head define the position of the movable web.

The drum-head consists of three parts, viz. a brass disc with milled edge by which the observer can impart small movements to the screw in observations for Collimation, Level, etc.; a celluloid disc, attached to the brass disc, and graduated into 100 parts; and a nickel-silver disc into which are let pieces of agate, the nickel and agate being ground to a common cylindrical surface. This latter is the contact-disc, and a platinum-tipped spring presses lightly upon it, so that, when the spring presses on the nickel-silver part of the circumference, the electro-magnet of the chronograph is excited, and when it presses on the agate no current passes.

Beside the composite disc 10 is a second disc 11. This disc fits easily on the axis, so that it can be turned independently, and it also is composed of three parts, viz. a nickel-silver disc, a graduated celluloid disc, and a brass toothed wheel.

The nickel-silver disc of 11 has a special purpose: it allows the contact spring 12 (fig. *d*) to be in contact with the disc 10 only during such part of the star's transit as it is intended that the observer shall keep the star's image rigorously bisected by the travelling wire, and thus avoids a number of otherwise unnecessary and confusing records on the chronograph. As will be seen later, the disc 11 turns very slowly as compared with the drum-head 10, being, in fact, the counter of the number of revolutions of the screw, whilst 10 records the parts of a revolution.

The nickel-silver disc on 11 is made of rather larger diameter than the contact disc on 10, and the platinum end of the spring 12 is made broad enough to cover both the nickel-silver disc of 11 and the contact-disc of 10. It is then only necessary to cut suitable notches in the nickel disc (two of them as shown in fig. *a*) to correspond with those revolutions of the screw over which it is intended to guide the star, and then contact between the spring and the contact disc can only occur at these revolutions of the screw. The graduated celluloid disc on 11, as already stated, records the total number of revolutions of the screw.

Between disc 11 and the edge of the micrometer-box is a steel wheel of thirty teeth (fig. *a*) attached to the spindle 8, 9. This steel wheel gears in a wheel 13 (fig. *d*) of ninety teeth, which, in turn, gears into another wheel of ninety teeth that is mounted on the spindle 14, 15 (fig. *a*). This wheel slides on the spindle 14, 15, having a slotted fitting so that it can be slid out of or into gear with the wheel 13, and be held in either of these positions by the clamping screw 16. Concentric with and attached to wheel 13 is a pinion of sixteen teeth which gears in the toothed wheel upon disc 11. This latter wheel has 144 teeth. Thus one revolution of 14 causes 10 to make

Digitized by Google

three revolutions and 11 to make one-ninth of a revolution. Thus the celluloid drum of 11 is graduated into twenty-seven parts, each of which corresponds with one revolution of 10.

The celluloid discs 14 and 15 afford the means of rotating the micrometer-head by the use of the finger and thumb of both hands, and in that way, after some practice, the star can be kept continuously bisected.

17 is a bridge-shaped piece of brass as shown below in Fig. 2.

At *a* it slides on the spindle 14, 15, and at *b* is moved by a screw cut upon the spindle; thus the bridge-piece travels when the axis is turned. There is a hole at *c* (shown also in fig. *a* at 17) into which a pin in the eyepiece slide enters, and this causes the eyepiece to move along with the wire, the pitch of the screw on the axis 14, 15 being three times that of the micrometer screw 4, 5, because the latter rotates three times for one revolution of the former. In this way the travelling wire appears to be at rest in the field of the eyepiece.

Between the micrometer box and the head 15 is a friction-clutch, consisting of a cone on the axis 14, 15, which is ground into a hollow cone in 18; the latter has worm-teeth cut on its edge, as shown in fig. *a*. 21 (fig. *c*) is a worm-screw which, in the manner afterwards described, is turned by clockwork at such a rate as will cause the moving wire, when actuated by the wheels connected with the spindle 14, 15, to follow the star during transit. The amount of friction in the cone-clutch is regulated by pressure of the screw 20 (fig. *c*) acting on the springs 19 (fig. *a*). When this pressure is properly adjusted the travelling wire will follow the motion of the clock, and at the same time the observer can independently move it by the drum-head 10.

It will be seen that the upper bearing (22, fig. *a*) of the screw is fixed by screws having elongated holes (the screws are removed to show the elongated holes), so that the worm-screw can at pleasure be thrown out of gear, and therefore the micrometer can be used at pleasure either with or without clockwork.

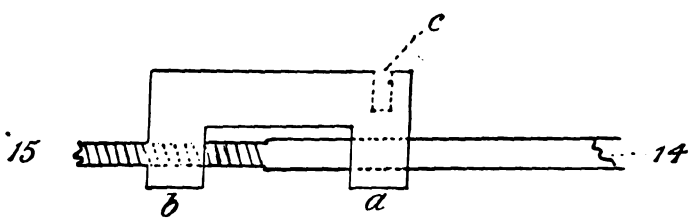

Fig. 2.

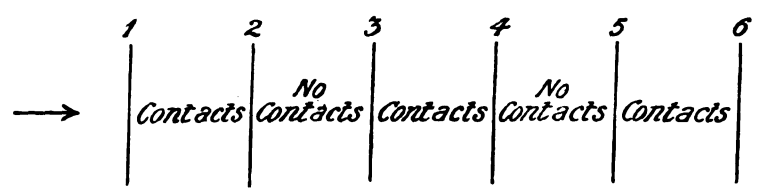

Fig. 3.

To complete the description of the appliances of the parts connected with the observation of Right Ascension :— There is a fixed frame 23 connected rigidly with the bottom of the micrometer box. On this frame I have finally adopted six fixed webs at intervals of two revolutions of the screw apart.

These webs have nothing to do with the observation; they simply serve to warn the observer when the travelling wire is about to reach that part of the field when the drum will record contacts on the chronograph.

The above diagram, Fig. 3, shows the arrangement. One revolution of the screw corresponds to $3^s{\cdot}783$ for an Equatorial star, *i.e.* $7^s{\cdot}566$ for a wire interval.

Suppose, now, an Equatorial star to be entering the field from the left. The observer, as the star approaches wire 1, begins to be very careful about keeping the star accurately bisected by the travelling wire, for, so soon as the star has passed wire 1, the notch in the nickel-silver disc on drum 11 allows the spring 12 to drop upon the contact drum of 10, and signals representing the successive "makes" or "breaks" on the drum-head are recorded on the chronograph. A low-resistance sounder, attached to the south side of the east pier, is joined up in series with the chronograph electro-magnet, and so the observer can hear that his signals are going on to the chronograph. So soon as the star reaches wire 2 the spring 12 is lifted from the contact drum, and signals to the chronograph cease. The observer has now about $22\frac{1}{2}$ seconds in which to make Declination pointings—that is to say, until the star comes to wire 5, when he must again preserve bisection of the star by the travelling wire till the star reaches wire 6; then the contact spring is lifted from the contact disc by the nickel disc, and no more records are made on the chronograph during that transit. The chronograph record for quick moving stars thus contains three groups of signals, viz. those between wires 1 and 2, between 3 and 4, and between 5 and 6. No attention, however, is paid to the middle group of signals, as the observer was at that time occupied with observations for Declination.

For Polar stars the Declination pointings are made between wires 2 and 3 and between wires 4 and 5, the Right Ascensions from wire 3 to wire 4.

The following (Fig. 4) is a copy of a chronograph record of the transit of an Equatorial star from one group of signals, referred to two clocks.

It would probably be of no advantage to record all these signals, and in practice we only read off the instants marked with a numeral, giving in all twelve signals for the two groups which form the complete record of the transit

Digitized by Google

of an Equatorial star. For a Polar star the signals of the single central group are alone employed—ten in all—as in Fig. 5.

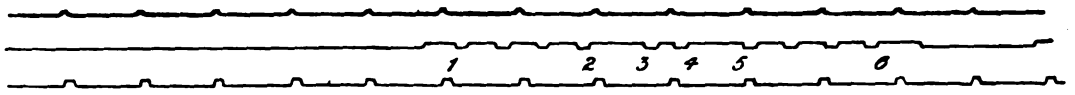

FIG. 4.

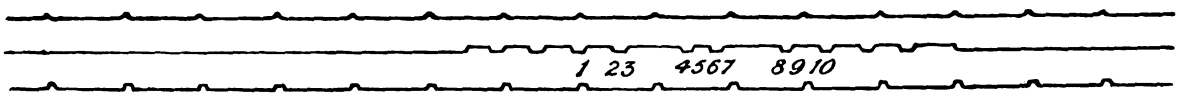

FIG. 5.

The Declination wire is mounted on a slide near the bottom of the micrometer box, of which the only parts clearly visible in fig. *a* are the two projections 24, the upper surfaces of which project only just sufficiently above the frame of the fixed webs to permit the Declination web to clear the fixed webs mounted on 23. This slide is mounted in a manner precisely similar to that of slide 1, 25 being the cylinder on which it moves, 26 the drum-head of the screw which communicates motion to it and measures the amount of that motion (see also fig. *b*). 27 and 28 are the screws which form the third bearing of this slide, and they perform the same functions for the Declination slide as 6 and 7 for slide 1.

26, fig. *b*, shows the graduation on the face of the drum of the Declination screw, and also the bevel-wheel and pinion gear by which the observer can, with great convenience and delicacy, rotate the screw by means of the brass disc 27.

The pointer is a lead pencil point, which on pressing the push-piece 28 draws a fine line upon the face of the celluloid disc, and at the same instant records on the chronograph the instant of the observations in Declination.

These markings can then be read off by means of the broken microscope 29. The marks can be instantly removed by rubbing with a moistened rag. Or, as the face of the disc is illuminated directly by light from a small incandescent electric lamp in the enclosure 30, the position of the pencil point relative to the graduations can, by means of the broken microscope 29 and the mirror 34, be very quickly read off, without making any marks. The screw 51 regulates the length and force of the pencil mark on the drum.

The drum-heads 10 and 11 are read with reference to the index line which is placed between them but cannot be read directly by the observer. It is, however, much more conveniently read by reflection from a mirror (only seen indistinctly in fig. *b*). The drum-heads 10 and 11 are illuminated by light from the lamp 30, which is concentrated by the lens 32 upon the mirror 33 (figs. *b* and *d*), whence it is reflected on the index and drum-heads 10 and 11. The illumination of the wires in a dark field is effected in a particularly elegant and efficient manner.

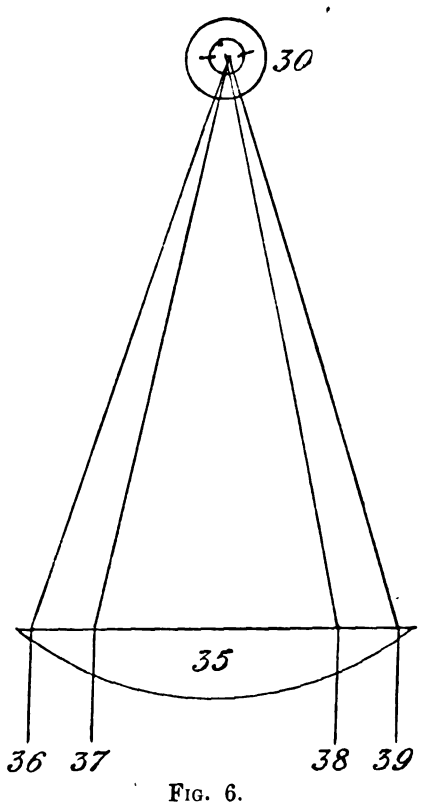

FIG. 6.

35 is a segment of a plane convex lens, shown in Fig. 6.

In fig. *b*, in which 35 is shown, this lens is partly hid by interposition of the lamp-enclosure 30 and partly by the lens 32. In Fig. 6, 30 is the lamp in the focus of the lens 35.

The parallel rays from 36 to 37 and from 38 to 39 are therefore in planes parallel to the Meridian and at right angles to the axis of the telescope. They fall on speculum metal reflectors underneath the ends of 24, and are reflected by them, at right angles to the plane of the diagram, upon mirrors inside the ends of 24, and thence upon the webs as shown in Fig. 7.

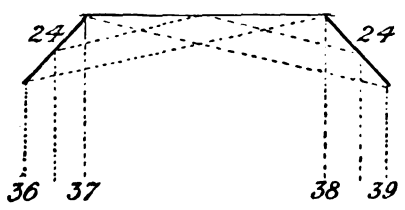

FIG. 7.

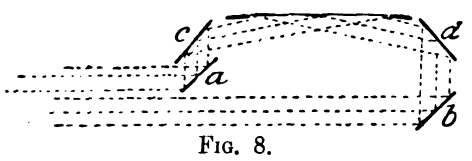

FIG. 8.

This provides illumination of the six fixed webs and the travelling webs by light falling on both sides of them at right angles to their lengths, and also for illumination of the Declination web, and of the two fixed webs parallel to it, by light falling nearly along their axes.

The parallel rays from 37 to 38 are reflected, half from the mirror *a* (fig. 8) and half from the mirror *b*, to

Digitized by Google

the mirrors *c* and *d* respectively, which are mounted on the slide 1, and these mirrors reflect the light upon the webs, illuminating the travelling R.A. webs along their length and the Declination webs at right angles to their length. In this way a most perfect and uniform illumination of all the webs is given, and it can be regulated at will by a rheostat.

40 (figs. *c* and *d*) is a shutter which, in the position shown, cuts off the light that otherwise would illuminate the webs. It can be folded back at pleasure by the fluted head 41 (figs. *a* and *d*). The interposition of this shutter is obviously necessary when observations are made with dark wires in a bright field.

42 is the eyepiece mounted on its slide; 43 (fig. *b*) is the graduated ring by rotation of which the eyepiece can be focussed; 44 (fig *c*) is the head by which 43 is clamped after adjustment.

45 (figs. *c* and *d*) is the screw for accurately focussing the webs in the principal focus of the object-glass; screws 46 and 47 (figs. *b* and *c*) combine the duties of orienting the micrometer and of clamping it when finally oriented and focussed, by their pressure upon the inclined planes of 48.

49 and 50 are convenient heads for removing or replacing the micrometer, and for handling the Transit Circle.

The micrometer-box, its tube and mounting, are of cast iron, the screws are of steel, so that the whole material employed has the same co-efficient of expansion by heat as that of the rest of the instrument.

The workmanship is of the excellent character that one expects of Messrs Repsold, and the convenience and elegance of the design and the perfection of the illumination of the webs leave nothing to be desired.

Regulating Motor of the Cone Apparatus (Plate XX.).

The contrivance of a satisfactory motor for driving the cone apparatus occupied my thoughts for some time. It was undesirable to employ a powerful clock driven by a weight, because it would be difficult to arrange for the necessary fall of the weight, and, even if that difficulty were overcome, it would be very inconvenient to dismount the weights, pulleys, etc., every week—that is to say, every time that the Transit Circle is reversed.

It was undesirable to employ a spring as motive power, because it would be difficult to obtain sufficient power without too frequent re-winding; it appeared, therefore, preferable, from the point of view of convenience, to employ some form of governed electro-motor.

But the working out of a good form of governed electro-motor at six thousand miles distance from workshops where such things are made would probably have needlessly wasted much time and energy, and it was therefore with relief that I found, on inquiry of the Société Génevoise, that such motors had actually been made by them, and that one such motor had been in satisfactory use at the Geneva Observatory for many years. The motor in question is described in the *Mémoires de la Société de Physique et d'Histoire naturelle de Genève*, tome xxix., No. 1, 1884, in a paper entitled "Description de l'equatorial Plantamour de l'Observatoire de Genève," by M. le Professeur Thury.

I had subsequently, on the occasion of my visit to Geneva in 1904, an opportunity of seeing two such motors at work in M. Thury's private observatory, and at the time was satisfied that it would be a very suitable form for the purpose in question.

After considerable discussion of detail at Geneva and subsequent correspondence, working plans were arranged and an experimental motor was constructed. This motor was not provided with differential gear by which increments of change of rate could be instantaneously applied by the observer; but the bisection of the star could be perfected by applying corrections to the micrometer whilst in motion, *i.e.* either by the brass disc of drum 10 or by the discs 14 or 15 (Plate XIX.).

Dr Cohn had apparently found that corrections could be applied to a moving screw with all necessary precision. After trial I did not feel this to be the case. I felt more and more that, if the motion of the wire could be accelerated or retarded at the will of the observer without touching the screw or affecting the rate of the motor itself, a great gain in convenience and accuracy would be reached.

The first experimental motor that was tried was found to be insufficiently powerful, and a more powerful motor, fitted with differential gear, was planned and made.

Plate XX. shows the apparatus as finally constructed. 1 and 2 are the field magnets of the electro-motor, 3 its armature, 4 the soft iron piece connecting the two electro-magnets, 5 the commutator, 6 the brush-holders, 8 the fly-wheel mounted upon a sleeve which can slide easily on the axis of the motor. This sleeve is suspended at 9 from the disc 10 by the springs 11. The balls 12 are attached to these suspending springs.

Current is transmitted from three or four accumulator cells to the spring 14 through the lever 13 to the screw 15, and thence to the motor.

Digitized by Google

Digitized by Google

MOTOR-REGULATOR FOR THE CONE APPARATUS

SECTION & ELEVATION

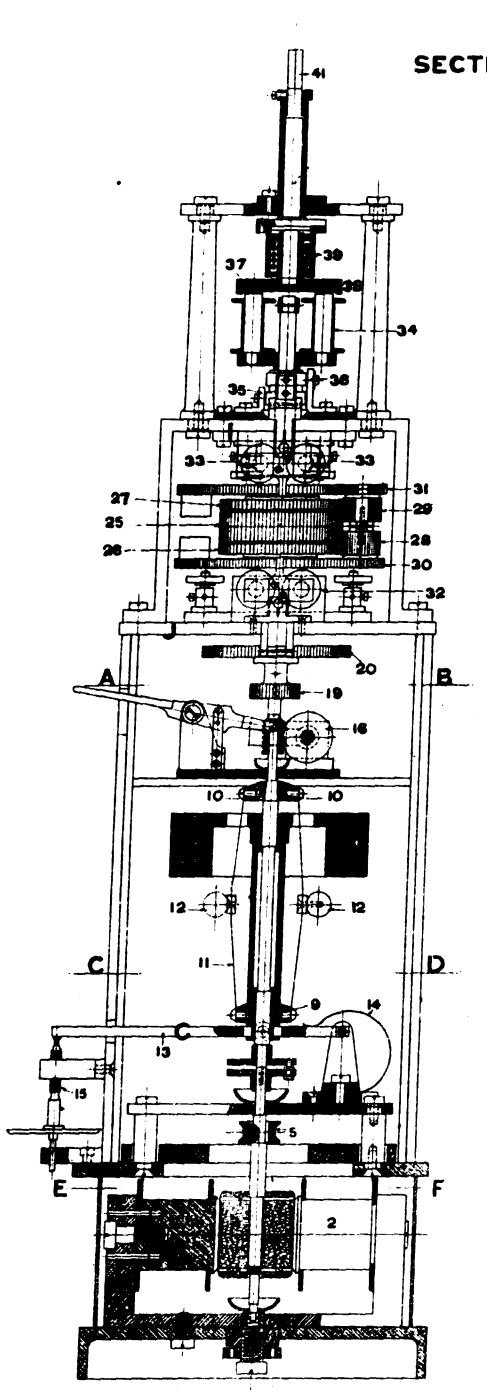

SECTIONAL PLAN THROUCH E F

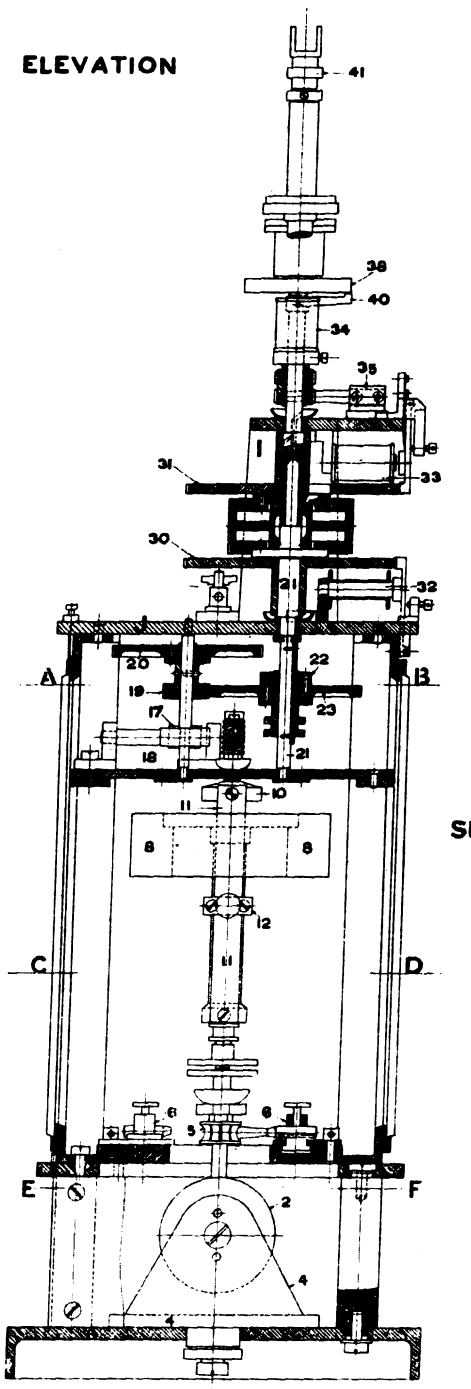

SECTIONAL PLAN THROUCH C D

PLAN OF BRIDCE

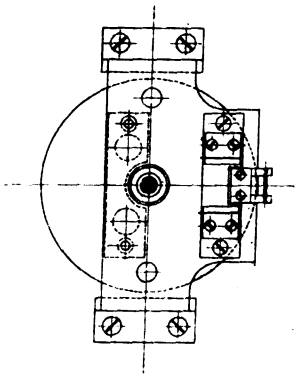

SECTIONAL PLAN THROUCH A B

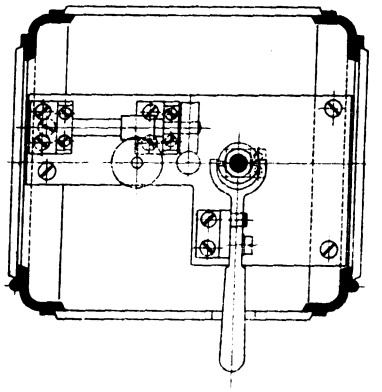

PLAN AT J

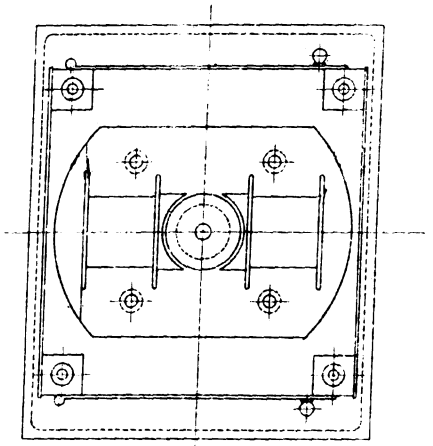

PLAN OF LEVER C

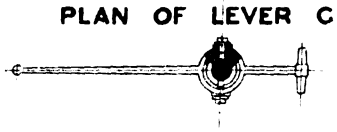

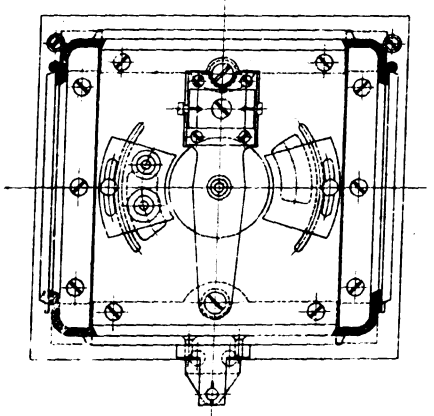

PLAN OF FLY WHEEL

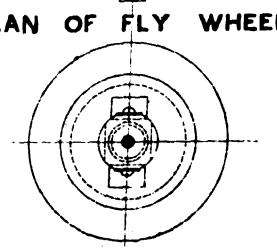

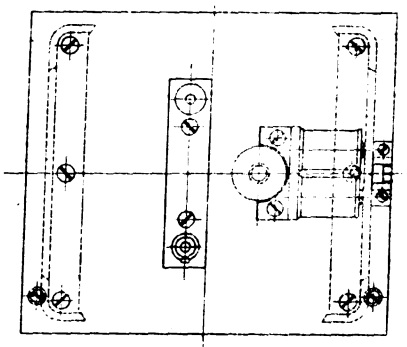

PLAN OF THE PIECE L

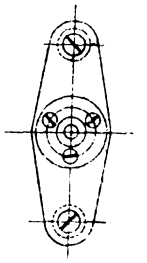

To face page 55.

Weller & Graham Lith. London

Digitized by Google

It will be seen, from inspection of the left-hand elevation and the plan of the lever 13, that if by any means the balls 12 are dragged apart, the lever 13 will be raised from the point of the screw 15, and so connection between the accumulator battery and the motor will be broken. When the rotation of the motor (and consequently that of the fly-wheel 8) attains a velocity of 4500 revolutions per minute, the centrifugal force acting in opposite directions upon the two balls becomes sufficient to force them apart, notwithstanding the strength of the springs and the weight of the fly-wheel and sleeve, and so the point of the lever 13 is raised from the point of the screw 15 and the supply of current is cut off from the motor. This immediately produces a diminution of the velocity of the fly-wheel, and consequently contact is restored between 13 and 15. In practice the contact is being made and broken so rapidly as to produce an apparently continuous spark between 13 and 15. To minimise this spark a shunt resistance between 14 and 15 is introduced which allows a constant current of about half the normal intensity to pass, and the regulation is maintained by the lever 13 making or cutting off the remainder of the supply. It is obvious that the rate of the motor can be regulated by raising or lowering the point of the screw. The divided head of the screw enables this to be done with certainty.

The shaft of the fly-wheel terminates in a worm-screw that acts tangentially on the wheel 16 of sixty teeth, which, when the motor makes 4500 revolutions per minute, makes 300 revolutions per minute. Another worm-screw upon the axis of 16 acts tangentially upon another wheel 18 of sixty teeth, and communicates to it a velocity of 20 revolutions per minute. The axis of 18 carries two wheels, one (19) of forty teeth and the other (20) of one hundred and twenty teeth.

The axis 21 carries two wheels (22 and 23), the former with forty, the latter with one hundred and twenty teeth. These wheels, 22 and 23, are conected together, and can be slid along the axis 21 by the lever 24, so that either 19 gears with 23 or 20 with 22.

There is a steel feather on the axis 21 which prevents rotation of 21 relative to 22 and 23.

When the wheels 19 and 23 are in gear (as shown in the drawing), the axis 21 makes one revolution in nine seconds. When 20 is made to gear with 22 (which is easily effected by pulling down the handle 24), the axis 21 makes one revolution per second.

The wheels 25, 26, 27, 28, and 29 together with the ratchet-wheels 30 and 31 constitute the well-known Sun and Planet differential gear invented by Sir Howard Grubb, and employed for giving fine slow motion in Right Ascension in all his recent equatorials.

These wheels are mounted in the manner shown in the drawings. 25 has one hundred teeth, 26 and 27 have ninety-six teeth, and the pinions 28 and 29 thirty teeth each. The whole of these revolve together as one block with the axis 21 and the electro-magnet 34.

But if the electro-magnet 32 is excited, the ratchet-wheel 30 is stopped by the catch attached to its armature. As 30 is free upon the axis 21, and as 26 is attached to that axis, the axis of 28 ceases to revolve about 21, and motion of rotation is communicated to 25 from 26 through the common pinion 28. But as the wheel 26 has ninety-six teeth as compared with one hundred in wheel 25, the velocity of rotation of 25 becomes 4 per cent. slower than that of 26. As the disc 31 is not clamped, then so long as the pinion 29 does not turn relative to its own steel axis, the two wheels 25 and 27 will remain fixed relative to each other, and a motion 4 per cent. slower than the axis 21 will be communicated to the upper part of the axis which carries the electro-magnet 34.

On the other hand, if the disc 31 is stopped by the catch on the armature of the electro-magnet 33, and if the disc 30 is free to revolve with the axis 21, then 25 will drive 27 through the pinion 29; and as 27 has 4 per cent. smaller number of teeth than 25, it will rotate 4 per cent. faster than 25, and so the electro-magnet 34 will rotate 4 per cent. faster than the axis 21.

Below the electro-magnet 34 two insulated metallic rings, 35 and 36, are fixed upon the axis, and upon these press lightly the two contact springs 35 and 36. The metallic rings are connected with the extremities of the winding of the electro-magnet 34, and so, through these springs, the electro-magnet 34 can be excited.

The armature of 34 is an iron disc, 37, to which is attached the toothed crown wheel 38. When 34 is excited, it draws down the armature against the spiral spring 39 until the single tooth on the arm 40 (which revolves with the electro-magnet) enters between two of the teeth in the wheel 38, and this causes the axis 41 (which connects with the cone apparatus) to rotate. Thus:—

(1) The motor can be run independently without turning the cone apparatus.

(2) By exciting the magnet 34 the cone apparatus can be instantly started at its proper speed.

(3) By exciting electro-magnet 32 the speed of rotation of the cone can be instantly retarded 4 per cent. for as long or short a period as may be desired.

(4) By exciting the electro-magnet 33 the speed of the cone may be similarly increased $4\frac{1}{2}$ per cent.

Digitized by Google

Thus on the south side of the east pier and on the north side of the west pier of the Transit Circle there are fixed switches, easily accessible to the observer's hand, by which the magnet 34 may be excited. The key employed is shown of natural size in Plate XXIII., figs. A and B. It can be held very conveniently in one hand whilst the forefinger of the same hand presses either the smooth-headed key (the accelerator) or the groove-headed key (the retarder) as may be required. The moving wire is set at a point corresponding to some fifteen or twenty seconds before the star reaches the first wire that marks the commencement of the first group of automatic signals. So soon as the star reaches the movable wire the cone apparatus is started by moving one of the two switches just mentioned. The star immediately appears to be at rest beside or on the wire. The bisection is perfected by a rapid motion of the screw by hand, and then by pressing the accelerating or retarding key, as may be required, throughout the transit. When the transit is over, the cone apparatus is stopped by turning off the switch.

The motor is mounted on an iron pillar, shown in Plate VIII. The upper part of this pillar can be lifted off, along with the motor, and transferred to the other side of the pier when the instrument is reversed. There is a corresponding pillar on the other side on which the motor can be placed.

When the motor is running well this system of observation leaves nothing to be desired, except that the differential motion is too slow when circumpolar stars are observed. But, for some reason which we are unable to trace, the motor is subject to sudden changes of rate which are greater than the observer can control by means of the differential gear. Steps are now being taken by Mr Hough to secure a more powerful and more perfect motor. At the same time the differential motion given by the observer will be made more rapid in action than formerly, and will in a given time displace the moving wire by the same angular amount for stars of all Declinations. This latter effect is produced by placing the differential gear on the axis between the cone apparatus and the micrometer, instead of between the cone apparatus and the motor, and by driving the differential gear by an independent motor which is continually running, but which is only brought into action when the observer presses the accelerating or the retarding key.

The Cone Apparatus (Plate XXI., figs. *a* and *b*).

The object of this apparatus is to vary the rapidity of motion transmitted from the motor to the movable wire, in order that the latter may move as nearly as possible at the same rate as a star of any required Declination in transit. As it was impossible to get a good photograph for descriptive purposes when the apparatus is mounted *in situ*, it was attached to a piece of wood covered with paper and photographed in another place, as shown in Plate XXI., figs. *a* and *b*.

1 is a tube connected at its lower end with the motor and suspended at its upper end from the Hooke's joint 2.

The Hooke's joint (2) clamps upon the lower pivot of the axis of wheel 3. The shoulder of this pivot runs on ball-bearings, so that the weight of the connecting rod 1 and its Hooke's joints may not create undue friction.

3 gears into wheel 4, and that into wheel 5. The reason for connecting the tube 1 to wheel 3, instead of directly to the axis of 5, was to make 1, and consequently the motor itself, vertically under 6 (the axis of the wheel that transmits motion through the pivot of the Transit Circle). An unsymmetrical position of the motor would have created inconvenience to an observer who desired to read the microscopes of the circle.

7 and 8 are the bevel-wheels which transmit motion to the cone. For this purpose they are both mounted on a sleeve which can slide, but not rotate, on the axis of 5; either 7 or 8 can be made to gear with the bevel-wheel 9, which is attached to the base of the cone 10. The object is, of course, to provide for making the moving web travel in the direction suitable for stars at upper or at lower transit. When 7 is in gear (as in the plate) the motion imparted to the web corresponds with that required for stars at upper transit; when 8 is in gear, with lower transit. The change is rapidly effected by raising the catch and pulling the sleeve downwards until the catch drops into another notch.

10, 11 is the cone. This is of hollow brass, carefully turned to a true cone and roughened on its surface by a sand-blast. Under the action of the regulating motor it makes one revolution per second or one revolution in 9 seconds, according as the handle 24 of the motor is set to "quick" or "slow" speed.

12 is a wheel which is turned by friction-contact with the cone. It consists of a thin disc of india-rubber slightly larger than the brass disc that is fixed upon the same axis, and it is pressed against this brass disc by a second brass disc of the same diameter as the first, and fixed to it by the screws shown in the figures. In the original construction of the apparatus a disc of compressed paper was employed, but its frictional contact with the

Digitized by Google

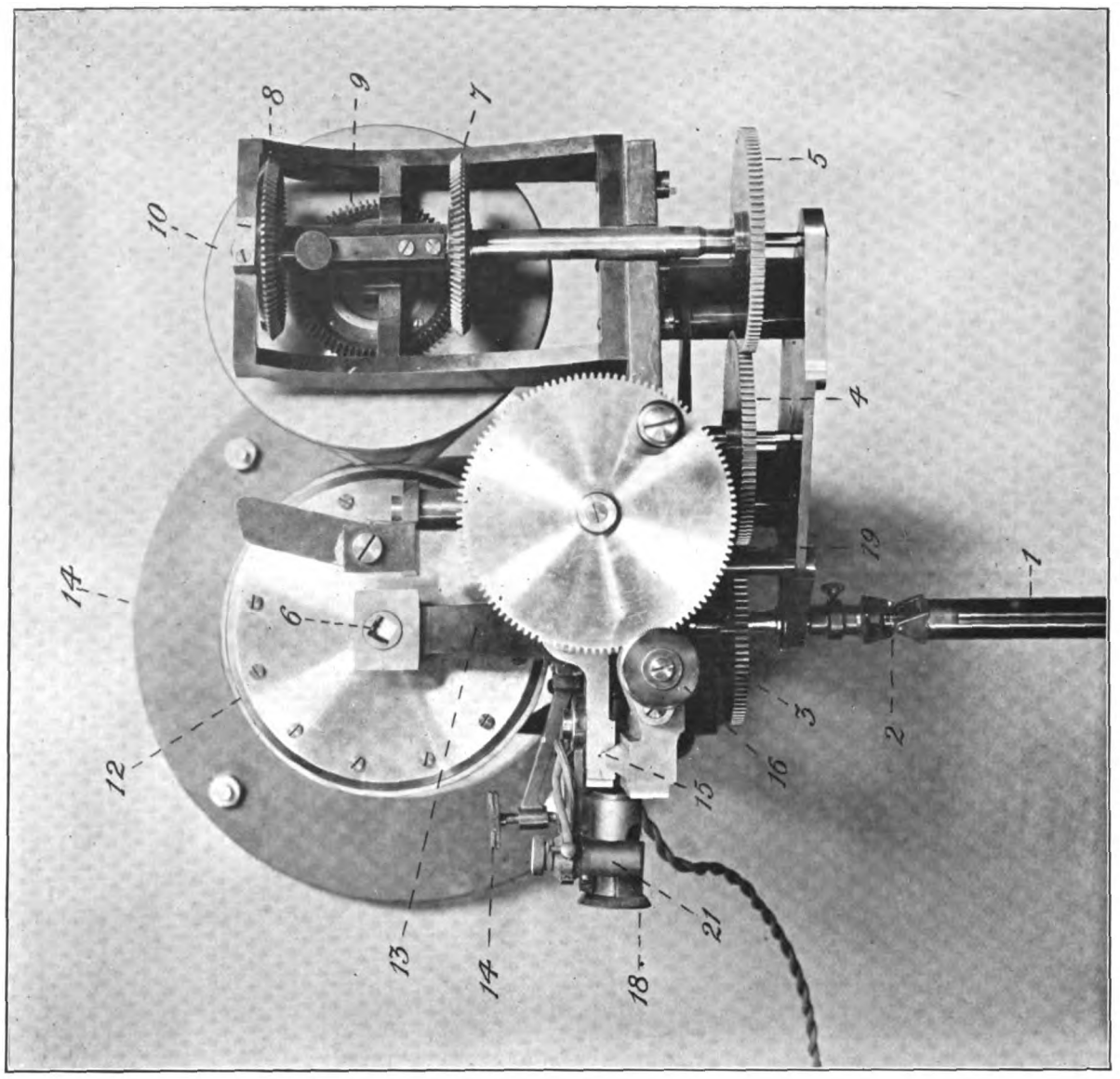

FIG. *b*.

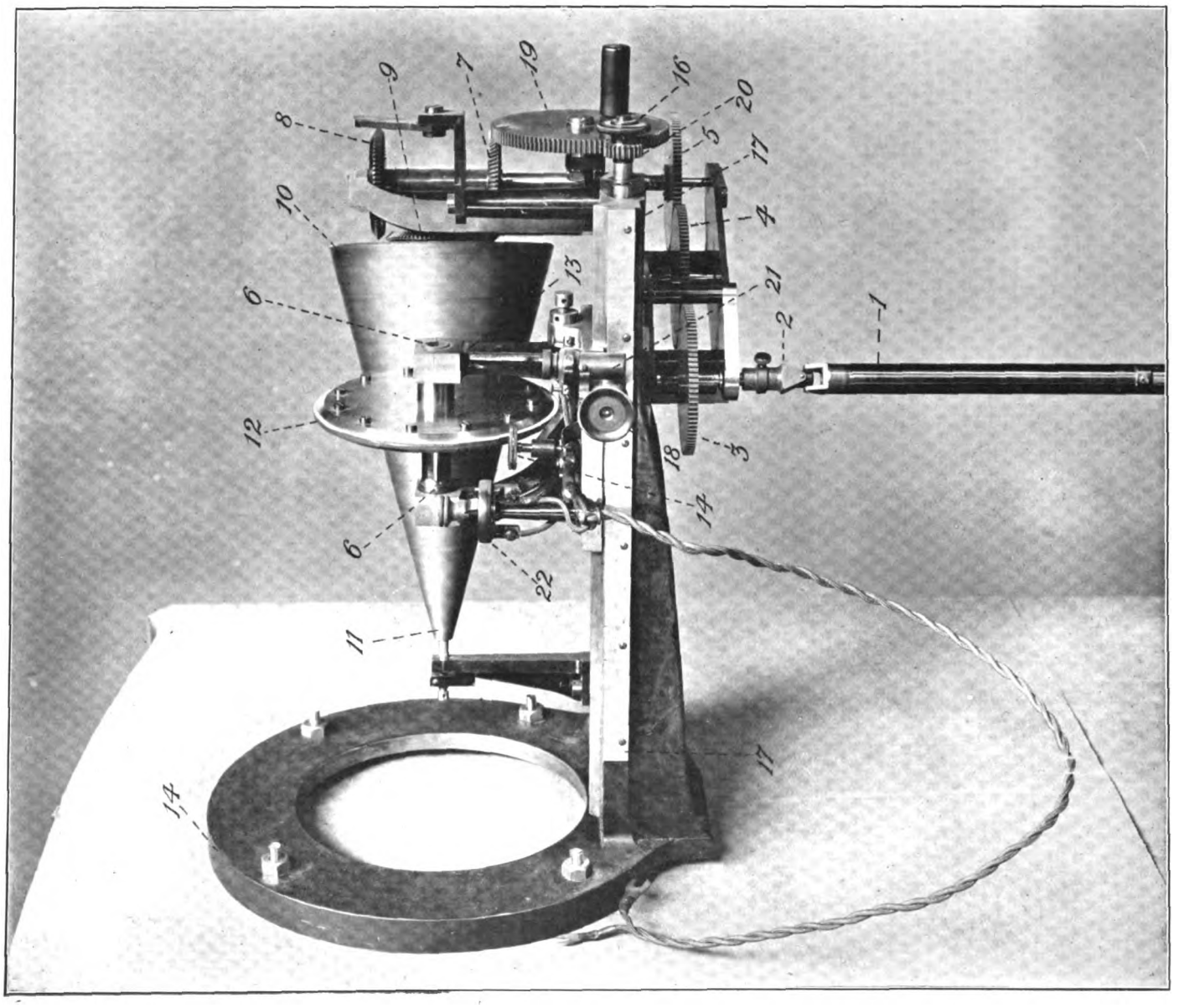

FIG. *a*.

[*To face page* 56.

Digitized by Google

Digitized by Google

cone soon became uncertain. The axis 6 of the wheel 12 is mounted on a rocking bracket, 13, to which is connected an arm that terminates in a screw, 14. Pressure of a spring on the end of this screw forces the wheel 12 into contact with the periphery of the cone, and the amount of pressure between the wheel and cone can be regulated by the screw 14. As the axis of the wheel 12 is designed to transmit motion through the axis of the pivot of the Transit Circle, it is obvious that the axis of 12 must also coincide with the axis of the Transit Circle. Also, the axis of the wheel 12 must be capable of travelling rigorously in a straight line coincident with the axis of the Transit Circle. The end of the slide for this purpose is shown at 15 in fig. *b*.

The wheel and its rocking support are traversed on this slide by means of a screw which terminates in the milled head 16, by means of which, with aid of the scale 17 and the eyepiece 18, it can be set to any point on the scale with great accuracy. For rapid motion from one point of the scale to another the wheel 19 gearing into the pinion 20 is provided.

The cone is mounted with its axis in the same horizontal plane as the axis of the wheel 12, but so that the line formed by intersection of this plane by the surface of the cone on the side towards the wheel is parallel to the axis of the wheel, and distant the radius of the wheel from its axis.

The cone has an angle at the apex of 30°, and the base of the cone is 120 mm. in diameter.

The wheel 12 is made nearly of the same diameter as the base of the cone.

The scale is graduated into equal parts numbered from 10 to 100. The index reads 10 when the wheel is set so that ten revolutions of the cone produce one revolution of wheel 12, and 100 when one revolution of the cone corresponds with one revolution of wheel 12. In this way the scale-readings are proportional to the velocity of rotation of the wheel 12 relative to the cone.

The axis of the regulating motor was constructed to make one revolution in one sidereal second at the "quick speed," and one-ninth of a revolution per second at "slow speed"; one revolution of the cone corresponds with one revolution of the clock spindle. Repsolds arranged the tangent screw and wheels of the micrometer so that ten revolutions of the worm-screw correspond with one revolution of the micrometer screw.

Numerous observations have determined the value of one revolution of the micrometer screw to be equivalent to 3·783 seconds of time for an Equatorial star; thus the period of rotation of the spindle which turns the worm-screw should be one revolution $= 0{\cdot}3783$ second, and therefore the bevel-wheels which transmit the motion of the axis of the wheel 12 to the spindle of the worm-screw should be toothed in the proportion of 10000 : 3783 or of 111 : 42 very nearly.

The two bevel-wheels have accordingly been cut with 111 and 42 teeth—a proportion less than 1 in 5000 parts in error—and which, if required, can be corrected by causing the driving-shaft at quick speed to make 5287 revolutions in 5286 sidereal seconds.

Thus, if the regulating motor is properly timed, the setting of the scale which will cause the micrometer web to follow a star accurately is

$$\text{Setting for quick speed} = 100 \cos \delta$$
$$\text{,, for slow speed} = 100 \cos \delta \times 9$$

when δ is the star's Declination.

A table of natural cosines thus enables the observer at once to set the slide of the wheel in the proper position for observing any star whose Declination is known. The proper scale-setting is entered opposite every star in the regular observing list.

21 is a small 6-volt lamp (controlled by the switch 22), which illuminates the scale by light reflected from the surface of a perforated diagonal reflector mounted in the interior of the eyepiece tube and inclined at an angle of 45° to its axis. This aid renders it a very quick and easy process to set the wheel of the cone in the required position.

In moving from one setting of the scale to another, the finger should be pressed upon the screw-head 14, so as to remove the edge of the wheel from contact with the cone, before turning the wheel 19. This precaution prevents wear of the surface of the cone or of the periphery of the wheel.

The regulation of the motor is accomplished by setting the scale to 100 and allowing the motor to record an imaginary transit of an Equatorial star on the chronograph, alongside the clock-record. The interval between the first and last registered contact will correspond with ten revolutions of the screw, and should therefore correspond with 37·83 seconds of time. As this interval can be read off to $0^s{\cdot}01$ or $0^s{\cdot}02$ on our chronograph, a single run determines the error of the rate with ample accuracy, and, as the effect of one revolution of the regulating screw of the motor is known, the required correction can be applied.

For transmission of the motion of wheel 12 to the micrometer, it will be seen from Plate XXI., fig. *b*, that

Digitized by Google

the pivots 6 of wheel 12 are hollow, and this hollow space is square in section. A long square shaft slides smoothly in the centre of the pivot.

A system of bevel-wheels is driven by the square shaft above mentioned. These wheels are mounted on the iron plate which is fitted and bolted to the strong and accurately turned diaphragm of the transit-axis, as shown upon a small scale at 34 in Plate VIII.

The square shaft is entered through the axis of 12, passes through the pivot, and enters a square hole upon the end of the axis of the bevel-wheel of one hundred and eleven teeth, being guided in entrance by the hollow cone shown in the figure, Plate VIII. The hollow aluminium rod 35, connected to the axis of the bevel-wheel of forty-two teeth, transmits the motion to a ball and pin joint on the inner extremity of the axis of the worm-screw 21 (see Plate XIX., figs. *b* and *c*).

The Circle Microscopes (Plate XXII., figs. *a* and *b*).

Plate XXII. shows the western end of the western pier; fig. *a* the installation for Clamp West, fig. *b* for Clamp East.

It will be remembered that the fixed circle, which is the circle that is ordinarily read, is attached to the same end of the axis as the clamp, and the illumination is introduced through the adjoining pivot. Thus fig. *a* shows the enclosure of the small 6-volt lamp from which light falls upon a prism in the axis, whence it is reflected to a speculum metal mirror that is cemented on the inner face of the object-glass, and thence to the field of the transit.

In order to insure uniformity of illumination at all Declinations it is necessary that the lamp should be exactly in the axis of rotation of the Transit Circle. This adjustment is effected by means of the screws 2 and 3. The colour of the illumination can be changed by use of brown, red, or colourless glass in the wheel 4.

The microscopes in ordinary use are shown in their proper positions; the spare microscopes *a*, *b*, *c*, *d*, used only in investigation of division error, are removed. Their removal permits the photograph to show the plan on which they are mounted.

Plate XXIII., fig. 1, shows one of the microscopes together with the iron collars by which it is attached to the iron box that forms the upper part of the pier.

The tube is of solid steel, finished at its extremities to true cylinders, so that it enters, a smooth fit, into the iron collars. The microscope passes freely through the boiler tube, and is clamped by square-headed screws in the manner shown in the plates.

Besides the collar, the microscope-tube first is passed through the adjusting piece 7 (Plate XXII., fig. *a*), which can also be clamped to the tube of the microscope. The square-headed screws 8 then give delicate means of adjusting the webs parallel to the division lines, and the screws 9 (Plate XXIII., fig 1) of focussing the microscope.

Each microscope is 18 inches in length from the webs to the object-glass, and the object-glass is about $4\frac{1}{4}$ inches distant from the circle. The microscopes, with the eyepieces in general use, magnify an object 42 diameters as compared with an object viewed at 10 inches from the naked eye.

Illumination of the part of the circle under the microscopes is effected by reflection of the light of a small incandescent 6-volt lamp from a surface of plaster of Paris inclined at an angle 45° to the axis of the microscope. The tube, containing the plaster of Paris surface from which the light is reflected, is mounted on a pillar attached to the wood casing of the pier; its axis is coincident with that of the microscope, and it is independent of the microscope itself—a little screen of black velvet only is employed to exclude extraneous light between the end of the tube and the microscope-objective. The plaster of Paris reflector has an elliptical hole in its centre, through which the divisions on the circle are viewed. A smaller tube at right angles to the other carries the small incandescent lamp.

Thus each microscope is provided with its own lamp, and each lamp has its own button-switch.

The button for each microscope is situated near the end of the micrometer-box which is farthest from the head, so that the observer can always with one hand press the button whilst he uses the other to adjust the two parallel spider webs moved by the micrometer screw symmetrically on opposite sides of the division (or mark) on the circle. Thus, for example, 10 is the button-switch for microscope G. When the finger is removed from the button the light is extinguished. In this way the lamp is only lighted for the few seconds that are required for the pointing, and even the small amount of heat so generated is not conveyed by conduction to the microscope.

It will be seen that all the electrical connections for the low tension (6-volt) circuits are simply brass strips, which, where they cross each other, are separated by ebonite. The arrangement is a very simple and convenient

Digitized by Google

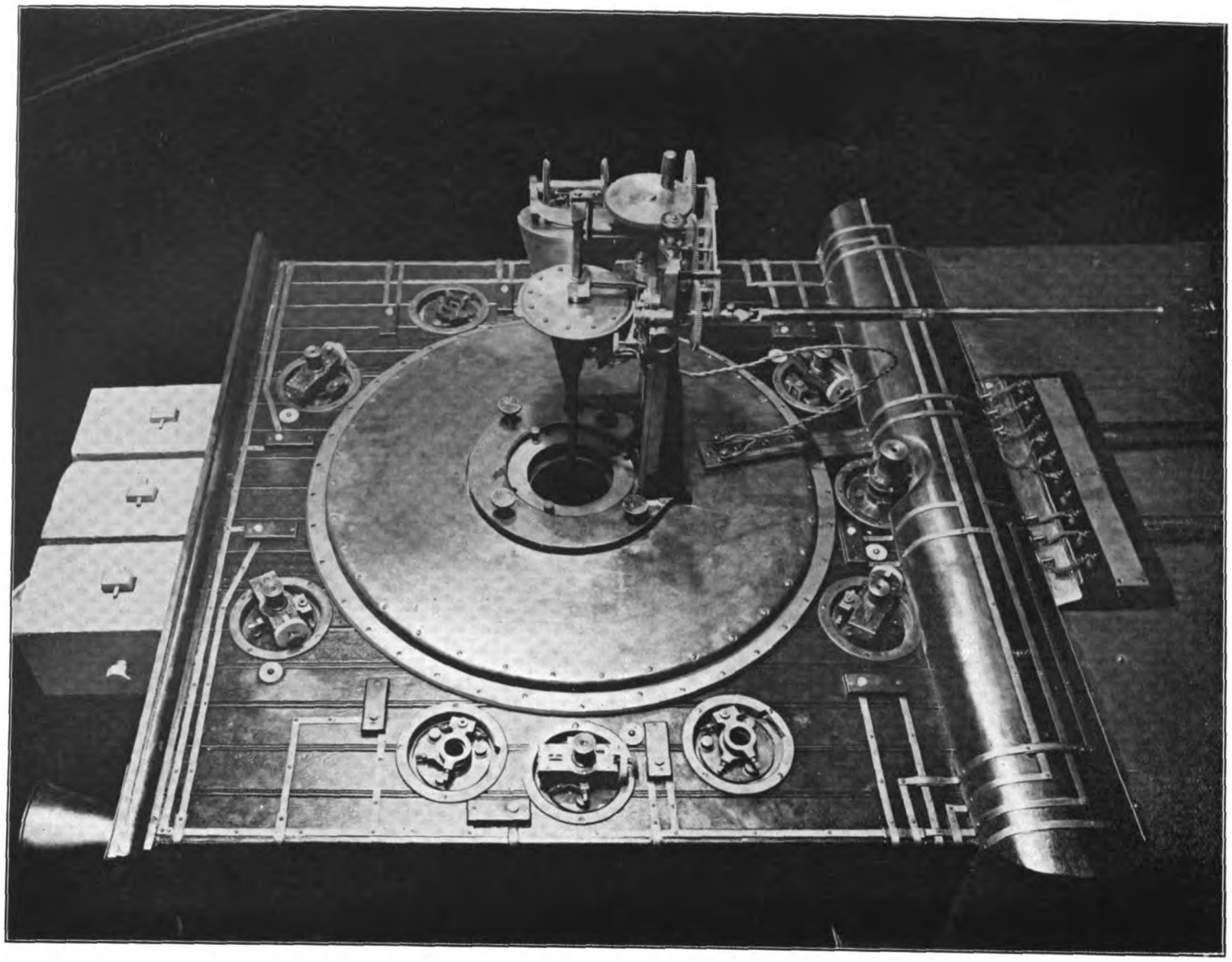

FIG. *b*.

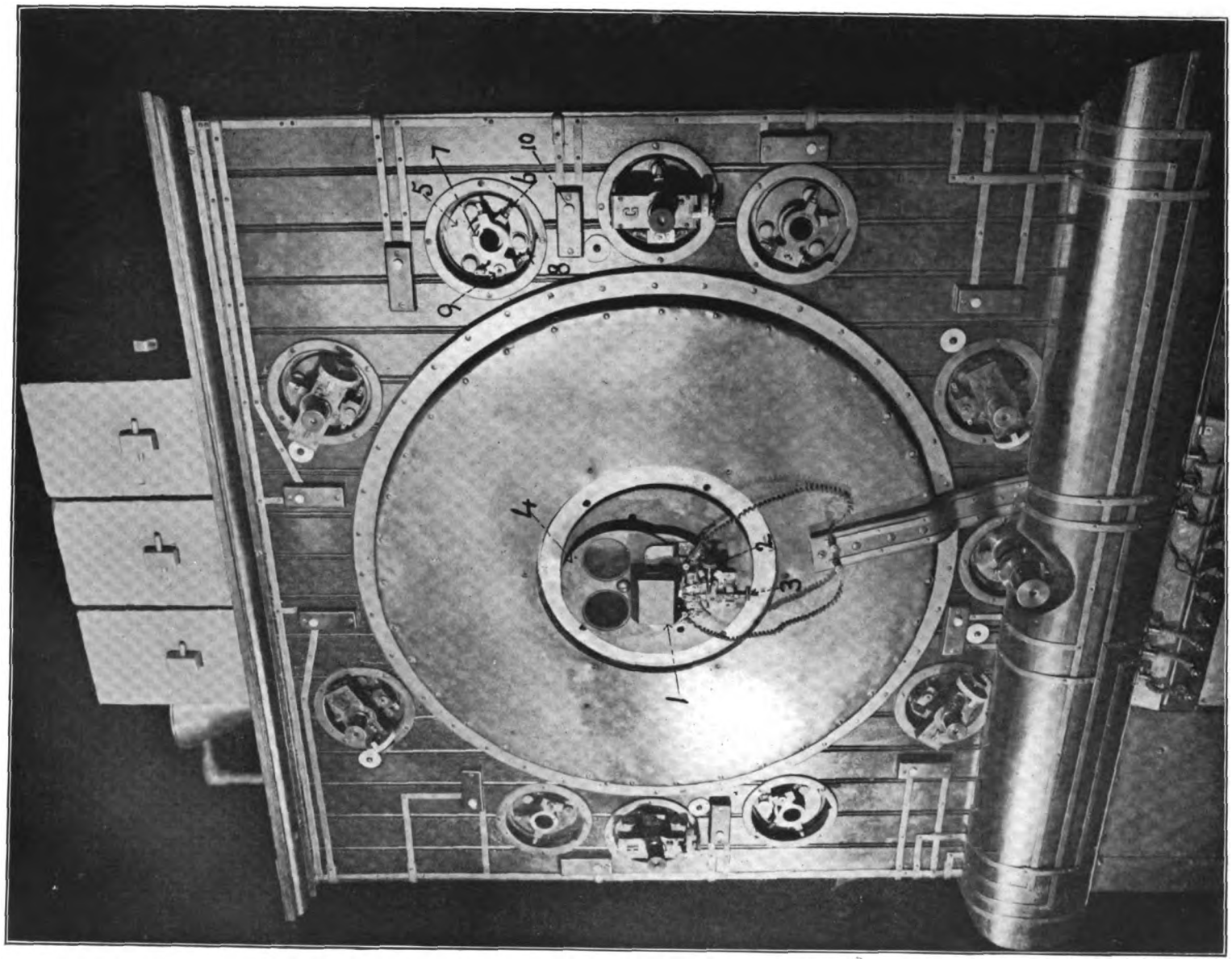

FIG. *a*.

[*To face page* 58.

Digitized by Google

Digitized by Google

Digitized by Google

(1)

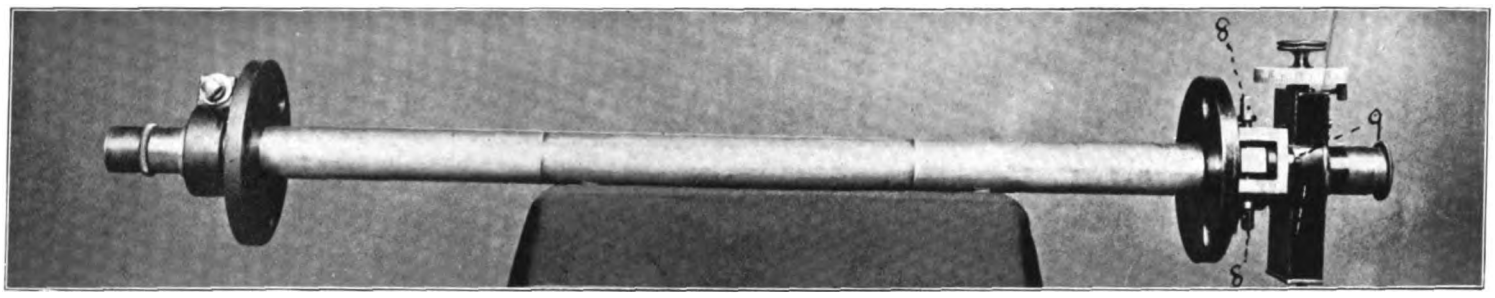

(2)

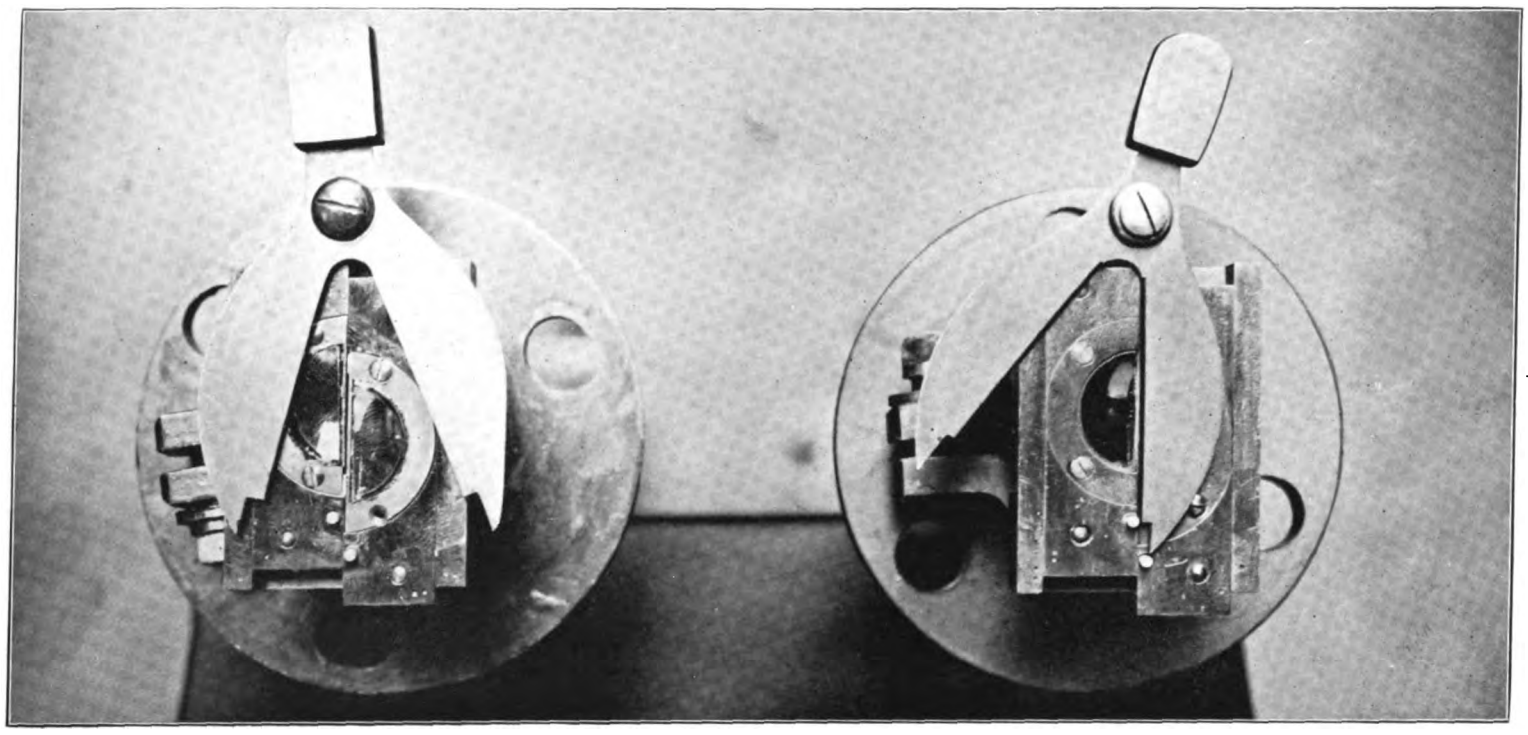

(3)

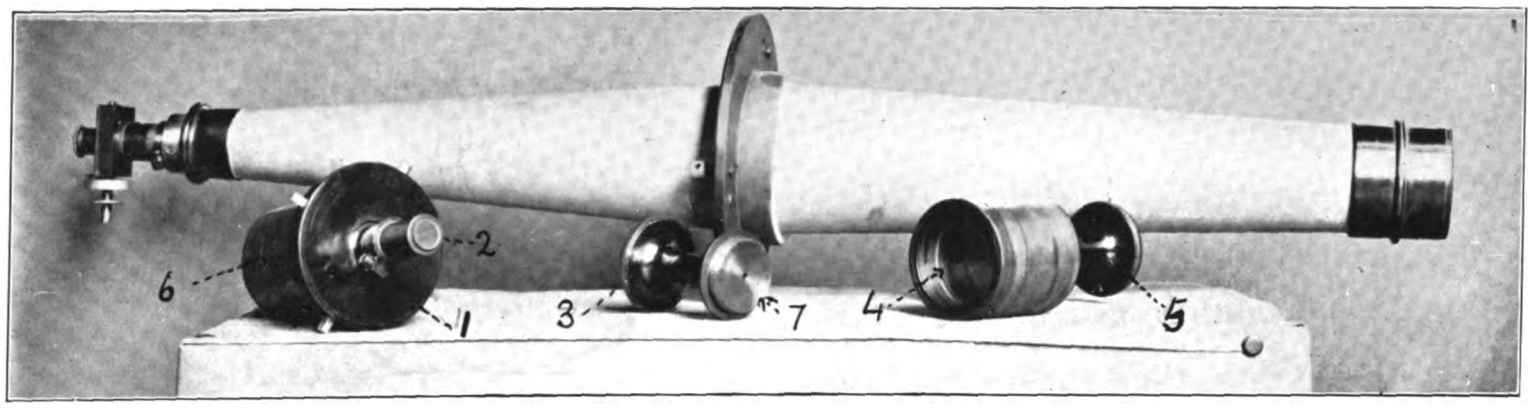

(4)

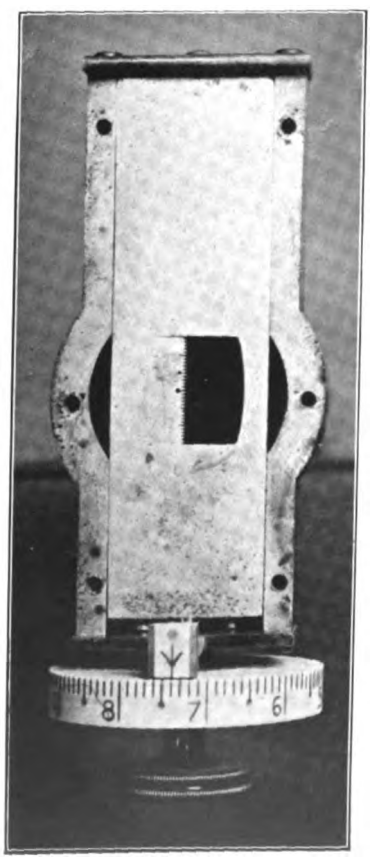

(5)

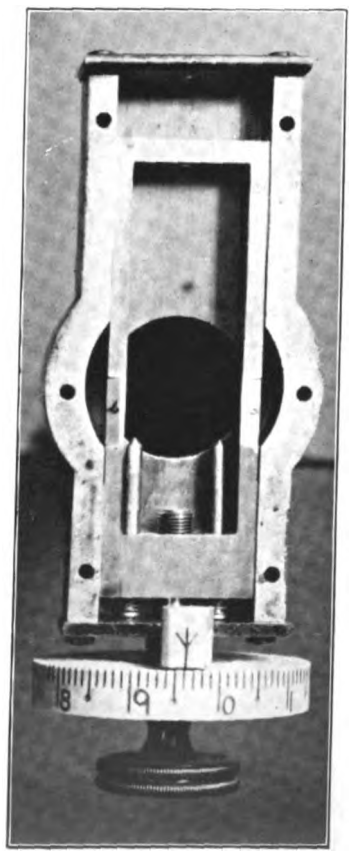

(6)

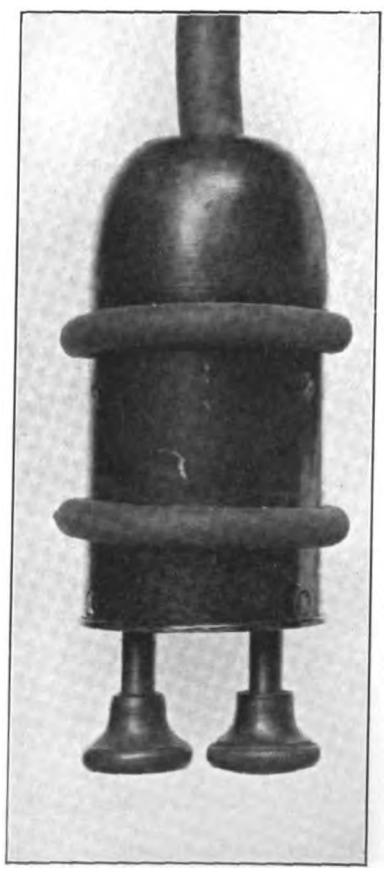

(7)

[*To face page* 59.

Digitized by Google

one; it was fitted, as also the wooden cover of the upper part of the pier, at the Cape. The illumination of the circles is quite perfect and leaves nothing to be desired.

Fig. *b* is chiefly of independent interest because it shows the cone apparatus (already described) attached to the pier.

Plate XXIII., fig. 2, shows two divided object-glasses which can be substituted for the ordinary objectives of two of the spare microscopes, for investigation of the errors of graduation of the circles. The optical centres of the semi-lenses are displaced relative to each other so that they bring the images of two lines on the circle, otherwise one degree apart, nearly into coincidence. With the aid of the balanced shutter shown in the figure either half of the objective can be covered, and so only one of the lines be seen at a time. The relative displacement of the optical centres of the lenses being regarded as a constant, the difference of the length of successive degree-spaces can be measured with the micrometer.

The divided object-glass micrometer does not give such good definition nor such symmetrical illumination as the ordinary micrometer, and, had another similar Transit Circle to be made, it would be well to provide an additional pair of boiler tubes through which a pair of microscopes on each pier making an angle of 24° with the microscopes L, M and C, D could be fixed. In this way the graduations could be determined to every degree without the use of divided object-glasses. Not only so, but the holes of the collars could be so widened as to permit the microscopes to be fixed so as to make the interval $24^\circ \pm 5'$, or $\pm 10'$, or $\pm 30'$, and so permit a most rigorous determination of each $5'$ space, with the use of microscopes which are similar throughout.

Plate XXIII., figs. *a* and *b*, shows the internal construction of the micrometers. The boxes are of steel, the slide of iron, the screw of steel, the micrometer-drums of celluloid.

In fig. *a* the cover and eyepiece are removed, showing the comb, or counter of whole revolutions; in fig. *b* the slide on which the webs are mounted is shown, as well as the micrometer screw and spiral springs.

In accordance with a suggestion of Mr Maw, the male and female screw are of the same length, so that if the slide was in the middle of its run no portion of the thread of the screw would be visible in the photograph. In this way it seems probable that a tendency to uneven wear in the screw will be prevented.

My chief criticism on the micrometer, of which I did not see the design until the micrometer-boxes had been completed, is that the spiral springs are too short, thus exaggerating the increase of pressure as the screw approaches the head. Also the thread of the screw is too near the hemispherical shoulder where it bears at the end of the box, because, at such short distance, the effect of any fault in the absolute parallelism of the axis of the screw with the direction of motion of the slide is unnecessarily exaggerated. It would have been better to have mounted the micrometer heads at the opposite end of the box, and to have shortened the slide and so obtained a much greater distance between the shoulder and the thread.

DETERMINATION OF THE ERRORS OF THE MICROMETER SCREWS.

All the drum-heads of the micrometers connected with the Transit Circle are graduated on celluloid into 100 parts, and the errors of the screws have been investigated with great care by means of the screw-testing apparatus which is described and figured in the Introduction to the *Cape Meridian Observations*, 1879–81, p. viii.

The periodic errors of the screws have been determined by Bessel's method.

If u is the smaller and u_1 the greater reading of the head, and f the constant interval between the webs of the screw-tester expressed in arc of the micrometer screw under observation, and if we assume that the periodic errors of the screw may be represented by :—

$$a_1 (\cos u_1 - \cos u) + b_1 (\sin u_1 - \sin u) + a_2 (\cos 2u_1 - \cos 2u) + b_2 (\sin 2u_1 - \sin 2u),$$

Bessel shows (*Astronomische Untersuchungen*, vol. i. pp. 79–80) that the values of the coefficients a_1, b_1, a_2, b_2 will be expressed by the following equations, when the constant space has been measured by beginning successively at ten symmetrically disposed points of the head :—

$$\begin{aligned}
10a_1 \sin \tfrac{1}{2}f &= \Sigma(u_1 - u - f) \sin (u + \tfrac{1}{2}f),\\
10b_1 \sin \tfrac{1}{2}f &= -\Sigma(u_1 - u - f) \cos (u + \tfrac{1}{2}f),\\
10a_2 \sin f &= \Sigma(u_1 - u - f) \sin (2u + f),\\
10b_2 \sin f &= -\Sigma(u_1 - u - f) \cos (2u + f),
\end{aligned}$$

where f may be taken as the mean of all the measured values of the constant space, and Σ is the usual expression of summation.

Digitized by Google

If the constant distance between the webs in the screw-tester is set = one-third of a revolution of the screw, the constants depending on the sine and cosine will be determined with equal weight.

But for a rigorous determination of the errors of the screws the progressive errors must be determined either simultaneously with the periodic errors, or the progressive errors must first be determined and eliminated before the periodic errors are determined. In the former case some assumption must be made as to the form of the progressive error, such as

$$an + bn^2 + \text{etc.},$$

where a and b are constants, and n the number of revolutions.

I have preferred in all cases to determine the progressive error for the intervals $0^r{\cdot}0$ to $1^r{\cdot}0$, $1^r{\cdot}0$ to $2^r{\cdot}0$, $2^r{\cdot}0$ to $3^r{\cdot}0$, etc., and, when possible, to determine also $0^r{\cdot}0$ to $2^r{\cdot}0$, $2^r{\cdot}0$ to $4^r{\cdot}0$, $4^r{\cdot}0$ to $6^r{\cdot}0$, etc., and $0^r{\cdot}0$ to $3^r{\cdot}0$, $3^r{\cdot}0$ to $6^r{\cdot}0$, $6^r{\cdot}0$ to $9^r{\cdot}0$, etc., and then from these measurements derive the absolute errors of the successive zeros of the micrometer screw. Then, plotting the successive summations of these on a curve, to interpolate the correction on account of the progressive errors for each part of the screw.

After applying these corrections for progressive error, the periodic errors are investigated at two or more different points of the screw, and in all instances except one—viz. for the circle screw M—they were found to be practically identical for all parts of the screw examined. For the screw M it was found necessary to determine first the progressive errors of the single revolutions from zero to zero and then to find the absolute error of each one-fifth of a revolution and interpolate the errors for each one-tenth of a revolution.

Screws of the Repsold Eye-End Micrometer.

The Right Ascension Screw.

In September 1905 spaces on the screw tester, nearly equal to one revolution, two revolutions, and three revolutions of the screw, were successively compared with all different parts of the screw that are used in course of work, to determine the progressive errors.

For determining the single-revolution spaces, pointings were made as follows: In going forwards, the left-hand wire of the screw-tester was set to correspond with $u = 14^r{\cdot}5$, and a pointing was made by turning the micrometer screw; then the micrometer screw was turned till the right-hand wire of the screw-tester was bisected; two pointings were made near the reading $15^r{\cdot}5$, and then the first reading, near $14{\cdot}5$, was repeated. The space $15^r{\cdot}5$ to $16^r{\cdot}5$ was similarly compared, and so on to $25^r{\cdot}5$ to $26^r{\cdot}5$; then the same observations were repeated in the reverse order. This constituted a complete set. Eight such sets were made in determining the single-revolution spaces. For the 2-revolution and 3-revolution spaces the results quoted depend on fourteen sets each.

u.	I. $u_1 - u$.	II. $u_1 - u$.	III. $u_1 - u$.
r			
14·5	r		
	1·00024	r	
		1·99781	r
15·5			3·000044
	53		
16·5			
	60		
17·5		1·99809	
	58		
18·5			
	31		3·00014
19·5		1·99795	
	58		
20·5			
	74		
21·5		1·99796	
	19		3·00028
22·5			
	84		
23·5		1·99801	
	49		
24·5			
	30		3·00055
25·5		1·99786	
	49		
26·5			

Digitized by Google

As the observer can only estimate to one-tenth, or at best to one-twentieth, of a division of the micrometer head—*i.e.* at the utmost to $\pm 0^{r}\cdot0005$—it is sufficient to limit the determination of the errors to the fourth decimal of a revolution. The resulting corrections to the screw readings are :—

	From II. and I.	From III. and I.	Mean.
14·5	$0^{r}\cdot0000$	$0^{r}\cdot0000$	$0^{r}\cdot0000$
15·5	+ 2·	+ 2	+ 2
16·5	+ 1	0	+ 0·
17·5	+ 0·	− 1	0
18·5	0	− 1	− 0·
19·5	+ 1·	+ 1	+ 1
20·5	0	+ 1	+ 0·
21·5	− 3	− 0·	− 2
22·5	0	+ 4	+ 2
23·5	− 2·	+ 2	0
24·5	− 1	+ 1	0
25·5	+ 0·	+ 1	0
26·5	0	0	0

The greatest progressive error of the screw thus amounts only to $\frac{1}{5000}$ of a revolution $= 0\cdot00076$ of a second of time for an Equatorial star—a quantity that may be safely neglected.

For the periodic errors a space $= 0^{r}\cdot33$ was measured with successive readings $u = {}^{r}\cdot0, {}^{r}\cdot1, {}^{r}\cdot2, {}^{r}\cdot3 \ldots {}^{r}\cdot9$; each result quoted below is the mean of six sets.

	$u^{1} - u - f$		
u =	$15^{r}\cdot3$ to $16^{r}\cdot2$.	$19^{r}\cdot3$ to $20^{r}\cdot2$.	$23^{r}\cdot3$ to $24^{r}\cdot0$.
·0	− $0^{r}\cdot0057$	− $0^{r}\cdot0057$	− $0^{r}\cdot0054$
·1	− 50	− 28	− 32
·2	− 12	− 1	− 12
·3	+ 19	+ 20	+ 24
·4	+ 35	+ 34	+ 34
·5	+ 40	+ 30	+ 38
·6	+ 40	+ 36	+ 37
·7	+ 26	+ 20	+ 18
·8	− 5	− 10	− 11
·9	− 38	− 48	− 39
f =	$0^{r}\cdot3278$	f = $0^{r}\cdot3278$	f = $0^{r}\cdot3276$.

The resulting constants of the periodic errors are :—

	15^{r} and 16^{r}.	19^{r} and 20^{r}.	23^{r} and 24^{r}.
a_1	= − $0^{r}\cdot00262$	− $0^{r}\cdot00210$	− $0^{r}\cdot00223$
b_1	= + ·00120	+ ·00147	+ ·00138
a_2	= − ·00040	− ·00067	− ·00035
b_2	= − ·00032	− ·00004	− ·00013

The corresponding corrections are practically identical, viz :—

Rev.	15^{r} and 16^{r}.	19^{r} and 20^{r}.	23^{r} and 24^{r}.	Mean.
·0	− $^{r}\cdot0030$	− $^{r}\cdot0028$	− $^{r}\cdot0026$	− $^{r}\cdot0028$
·1	− 18	− 11	− 12	− 14
·2	+ 5	+ 13	+ 8	+ 9
·3	+ 25	+ 26	+ 24	+ 25
·4	+ 30	+ 24	+ 26	+ 27
·5	+ 22	+ 14	+ 19	+ 18
·6	+ 10	+ 6	+ 8	+ 8
·7	− 2	− 2	− 4	− 3
·8	− 14	− 15	− 16	− 15
·9	− 26	− 27	− 26	− 26

The mean corrections given in the last column have therefore been adopted for the whole screw.

The value of one revolution of the screw is $3^{s}\cdot783$; the same result has been found both from the observations of 1905 and 1906.

Digitized by Google

The Declination Micrometer of the Eye-End.

There are practically only three revolutions of this micrometer which come into use. The screw has no counter of revolutions. There are two fixed horizontal wires in the field, one of which corresponds with the reading $0^r{\cdot}0$ of the Declination screw, the other with the reading $5^r{\cdot}0$.

As the telescope is set and clamped so that the star transits nearly midway between the fixed wires, the Declination reading is always near 2·5 revolutions, and thus nearly all observations are made between readings $2^r{\cdot}0$ and $3^r{\cdot}0$; if any exception is made the observer can estimate the whole revolution without difficulty.

The investigation of the screw has been therefore confined to the revolutions between $1^r{\cdot}0$ and $4^r{\cdot}0$.

A space on the screw-testing apparatus nearly equal to 1^r was compared with each revolution of the screw within these limits.

The mean of twenty-seven satisfactory accordant sets gave the following results :—

	1^r to $2^r{\cdot}0$	2^r to $3^r{\cdot}0$	$3^r{\cdot}0$ to $4^r{\cdot}0$
Space on screw-tester =	$0^r{\cdot}99811$	$0^r{\cdot}99716$	$0^r{\cdot}99751$

The corresponding corrections are therefore :—

	Correction.
$1^r{\cdot}0$ . . .	$0^r{\cdot}0000$
2 ·0 . . .	− · 6
3 ·0 . . .	− 2
4 ·0 . . .	± 0

For the periodic errors a space $= 0^r{\cdot}33$ was measured beginning at each tenth of a revolution from 1·0 to 1·9, and from 2·5 to 3·4. These two sets gave the following results for the space on the screw-tester as measured at different parts of the screw :—

Decimal of Revolution.	near 1·5 Rev. u_1-u-f.	near 3 Rev.	u_1-u-f corrected for Progressive Error.		v.
0·0	$0^r{\cdot}3355$	$0^r{\cdot}3355$	$+^r{\cdot}0011$	$+^r{\cdot}0009$	$-^r{\cdot}0005$
·1	49	55	+ 5	+ 9	+ 1
·2	42	39	− 2	− 7	+ 1
·3	14	25	− 30	− 21	− 2
·4	11	7	− 33	− 39	0
·5	19	18	− 25	− 28	− 1
·6	44	48	0	+ 2	+ 4
·7	59	67	+ 15	+ 21	− 4
·8	78	75	+ 34	+ 29	+ 1
·9	72	75	+ 28	+ 29	+ 4

Correcting the values of u_1-u-f for progressive error and taking the mean we derive the following constants for the correction of periodic errors :—

$$a_1 = +0{\cdot}00041$$
$$b_1 = - \quad 170$$
$$a_2 = - \quad 43$$
$$b_2 = + \quad 2$$

These constants give the residuals v in the last column of the above table.

The corresponding corrections having regard to the progressive errors, expressed in hundredth parts of a division of the drumhead, are as follows :—

Rev.	$r{\cdot}0$.	$r{\cdot}1$.	$r{\cdot}2$.	$r{\cdot}3$.	$r{\cdot}4$.	$r{\cdot}5$.	$r{\cdot}6$.	$r{\cdot}7$.	$r{\cdot}8$.	$r{\cdot}9$.
1	0	− 9	−12	−16	−17	−11	+ 2	+14	+16	+ 7
2	− 6	−14	−16	−19	−19	−12	+ 2	+15	+18	+10
3	− 2	−10	−13	−15	−16	− 9	+ 5	+17	+21	+12
4	0									

The value of one revolution of the screw is $38''{\cdot}97$.

Circle Microscope Screws.

The circles are divided into 5′ spaces, and one revolution of each microscope screw is approximately equal to one minute of arc. The heads being divided into 100 parts, the sum of the decimal readings of the six microscopes, estimated to one-tenth of a division, when added together give the corresponding seconds and hundredth parts of a second of arc. The microscopes are adjusted so that the revolution in the centre of the field is $5^r{\cdot}0$, and it is

Digitized by Google

assumed that the observer will read the division of the circle which is nearest to $5^r{\cdot}0$. The errors of the screws have been determined from 0^r to $10^r{\cdot}0$.

The investigations of the errors of the screws were made on the same lines as those of the R.A. micrometer screw.

The progressive errors of the zero-readings of the head from $0^r{\cdot}0$ to $10^r{\cdot}0$ were determined for each alternate revolution by twelve sets, and for each single revolution by six sets of observations.

The periodic errors were determined by measuring a space on the screw-tester corresponding to $0^r{\cdot}33$. One set of such observations was made at each revolution of the screw, and as in every case but one (that of microscope M already mentioned) the periodic errors were evidently identical for all parts of the screw, the mean values of $(u_1 - u - f)$ were adopted for computation of the periodic error.

The results are given in the following tables:—

Corrections to the Microscope Readings of the East Pier on Account of Errors of the Screws (Unity = $0^r{\cdot}0001$).

r.	A.	B.	C.	D.	E.	F.	r.	A.	B.	C.	D.	E.	F.
0·0	− 4	− 2	+ 4	− 36	+ 14	+ 12	5·0	− 34	− 6	+ 44	− 37	+ 19	+ 11
·1	− 2	− 2	+ 3	− 29	+ 8	+ 10	·1	− 29	− 7	+ 43	− 31	+ 12	+ 9
·2	0	+ 2	+ 1	− 25	− 7	+ 5	·2	− 25	− 3	+ 42	− 27	− 2	+ 3
·3	− 3	+ 8	0	− 20	− 10	0	·3	− 25	+ 2	+ 40	− 23	− 6	− 2
·4	− 4	+ 7	− 1	+ 3	0	− 2	·4	− 24	+ 1	+ 39	0	+ 5	− 4
·5	− 5	+ 2	− 3	+ 39	+ 8	− 3	·5	− 23	− 5	+ 38	+ 36	+ 13	− 6
·6	− 7	− 2	− 3	+ 62	+ 1	− 7	·6	− 22	− 9	+ 38	+ 59	+ 5	− 10
·7	− 10	0	− 1	+ 47	− 14	− 8	·7	− 23	− 7	+ 40	+ 44	− 10	− 11
·8	− 16	+ 5	+ 3	+ 7	− 15	− 3	·8	− 26	− 2	+ 43	+ 3	− 11	− 6
·9	− 20	+ 6	+ 5	− 25	− 2	+ 8	·9	− 28	− 2	+ 46	− 30	+ 3	+ 4
1·0	− 20	+ 3	+ 6	− 31	+ 10	+ 15	6·0	− 25	− 5	+ 47	− 36	+ 14	+ 11
·1	− 18	+ 2	+ 6	− 25	+ 4	+ 13	·1	− 20	− 5	+ 46	− 30	− 8	+ 9
·2	− 17	+ 6	+ 5	− 22	− 10	+ 8	·2	− 16	− 1	+ 44	− 26	− 5	+ 3
·3	− 19	+ 11	+ 3	− 18	− 13	+ 3	·3	− 16	+ 5	+ 41	− 22	− 8	− 2
·4	− 21	+ 10	+ 3	+ 5	− 1	+ 1	·4	− 15	+ 4	+ 40	+ 1	+ 4	− 4
·5	− 22	+ 4	+ 2	+ 40	+ 7	0	·5	− 14	− 1	+ 38	+ 37	+ 13	− 5
·6	− 24	− 1	+ 3	+ 62	0	− 4	·6	− 13	− 4	+ 38	+ 60	+ 6	− 9
·7	− 28	0	+ 6	+ 47	− 14	− 5	·7	− 14	− 3	+ 39	+ 45	− 8	− 10
·8	− 34	+ 5	+ 9	+ 6	− 15	0	·8	− 17	+ 3	+ 42	+ 4	− 8	− 5
·9	− 38	+ 5	+ 13	− 28	− 1	+ 11	·9	− 19	+ 3	+ 44	− 29	+ 7	+ 5
2·0	− 38	+ 2	+ 14	− 34	+ 11	+ 18	7·0	− 16	+ 1	+ 45	− 35	+ 19	+ 12
·1	− 34	0	+ 14	− 28	+ 5	+ 16	·1	− 12	0	+ 43	− 29	+ 13	+ 10
·2	− 31	+ 4	+ 13	− 24	− 9	+ 10	·2	− 8	+ 4	+ 40	− 24	− 2	+ 3
·3	− 32	+ 9	+ 11	− 20	− 13	+ 5	·3	− 9	+ 10	+ 37	− 20	− 5	− 2
·4	− 32	+ 7	+ 11	+ 3	− 2	+ 3	·4	− 9	+ 9	+ 35	+ 3	+ 6	− 4
·5	− 31	0	+ 10	+ 39	+ 6	+ 1	·5	− 8	+ 3	+ 32	+ 39	+ 14	− 6
·6	− 31	− 4	+ 11	+ 61	− 2	− 4	·6	− 7	− 1	+ 31	+ 62	+ 6	− 11
·7	− 33	− 3	+ 13	+ 46	− 16	− 5	·7	− 9	0	+ 33	+ 47	− 8	− 12
·8	− 37	+ 1	+ 17	+ 5	− 17	0	·8	− 13	+ 6	+ 35	+ 6	− 9	− 7
·9	− 40	+ 1	+ 20	− 28	− 4	+ 10	·9	− 15	+ 6	+ 36	− 26	+ 4	+ 2
3·0	− 38	− 3	+ 22	− 34	+ 8	+ 17	8·0	− 13	+ 3	+ 36	− 32	+ 16	+ 9
·1	− 33	− 5	+ 22	− 28	+ 2	+ 15	·1	− 9	+ 2	+ 33	− 26	+ 10	+ 7
·2	− 30	− 1	+ 22	− 24	− 11	+ 8	·2	− 5	+ 6	+ 30	− 22	− 4	+ 2
·3	− 31	+ 3	+ 21	− 21	− 14	+ 3	·3	− 6	+ 11	+ 26	− 18	− 7	− 3
·4	− 30	+ 2	+ 22	+ 2	− 2	+ 1	·4	− 5	+ 9	+ 23	+ 5	+ 4	− 5
·5	− 29	− 5	+ 21	+ 38	+ 6	− 1	·5	− 4	+ 3	+ 20	+ 40	+ 12	− 6
·6	− 29	− 9	+ 23	+ 60	0	− 6	·6	− 3	− 1	+ 18	+ 62	+ 5	− 10
·7	− 31	− 8	+ 26	+ 45	− 14	− 7	·7	− 5	0	+ 18	+ 47	− 9	− 11
·8	− 35	− 4	+ 31	+ 3	− 14	− 2	·8	− 9	− 5	+ 19	+ 6	− 10	− 6
·9	− 37	− 4	+ 35	− 30	0	+ 7	·9	− 11	+ 5	+ 20	− 27	+ 4	+ 5
4·0	− 35	− 8	− 37	− 36	+ 12	+ 14	9·0	− 9	+ 2	+ 19	− 33	+ 16	+ 12
·1	− 31	− 9	+ 37	− 30	+ 7	+ 12	·1	− 4	0	+ 17	− 27	+ 10	+ 10
·2	− 28	− 5	+ 35	− 26	− 6	+ 5	·2	− 1	+ 4	+ 13	− 24	− 4	+ 4
·3	− 29	0	+ 34	− 22	− 9	0	·3	− 1	+ 8	+ 10	− 20	− 8	− 1
·4	− 29	0	+ 34	+ 1	+ 3	− 2	·4	− 1	+ 7	+ 7	+ 3	+ 3	− 3
·5	− 28	− 6	+ 33	+ 36	+ 12	− 4	·5	+ 1	+ 1	+ 4	+ 38	+ 11	− 5
·6	− 27	− 10	+ 33	+ 58	+ 5	− 9	·6	+ 1	− 4	− 2	+ 60	− 4	− 9
·7	− 29	− 9	+ 36	+ 43	− 8	− 10	·7	0	− 3	+ 2	+ 45	− 10	− 10
·8	− 34	− 4	+ 40	+ 2	− 8	− 5	·8	− 4	+ 2	+ 4	+ 4	− 12	− 5
·9	− 36	− 4	+ 43	− 31	+ 6	+ 4	·9	− 6	+ 1	+ 5	− 30	+ 2	+ 5

Digitized by Google

Corrections to the Microscope Readings of the West Pier on Account of Errors of the Screws (Unity = $0^{r}\cdot0001$).

r.	G.	H.	I.	K.	L.	M.	r.	G.	H.	I.	K.	L.	M.
0·0	− 14	+ 1	− 3	− 7	+ 2	0	5·0	0	0	− 79	+ 15	+ 10	− 4
·1	+ 3	0	− 1	− 7	− 2	+ 3	·1	+ 15	− 1	− 73	+ 14	+ 6	− 4
·2	+ 18	+ 1	+ 2	+ 4	− 6	+ 6	·2	+ 29	0	− 66	+ 22	+ 3	− 3
·3	+ 15	+ 2	+ 2	+ 12	− 3	+ 8	·3	+ 24	+ 1	− 62	+ 28	+ 6	− 4
·4	− 1	0	− 3	+ 10	+ 3	+ 10	·4	+ 6	− 1	− 63	+ 23	+ 12	− 4
·5	− 6	− 3	− 12	+ 2	+ 6	+ 22	·5	0	− 4	− 67	+ 13	+ 15	− 2
·6	+ 5	− 4	− 20	+ 4	+ 3	+ 33	·6	+ 10	− 4	− 71	+ 13	+ 12	+ 1
·7	+ 15	− 1	− 25	+ 15	− 1	+ 19	·7	+ 18	− 1	− 72	+ 22	+ 8	− 4
·8	+ 10	+ 2	− 26	+ 23	0	+ 5	·8	− 11	− 2	− 69	+ 27	− 9	− 9
·9	− 4	+ 3	− 27	+ 18	+ 3	− 3	·9	− 4	+ 3	− 67	+ 21	+ 13	− 10
1·0	− 5	+ 1	− 28	+ 10	+ 3	− 11	6·0	− 7	+ 1	− 63	+ 10	+ 13	− 11
·1	+ 11	0	− 26	+ 10	− 1	− 8	·1	+ 9	0	− 57	+ 9	+ 8	− 4
·2	+ 25	+ 2	− 21	+ 21	− 5	− 5	·2	+ 23	+ 1	− 50	+ 17	+ 4	+ 4
·3	+ 21	+ 3	− 21	+ 29	− 2	− 2	·3	+ 18	+ 2	− 46	+ 23	+ 6	+ 1
·4	+ 4	+ 2	− 25	+ 27	+ 4	+ 1	·4	+ 1	0	− 47	+ 18	+ 12	− 3
·5	− 2	− 1	− 33	+ 19	+ 6	+ 6	·5	− 5	− 3	− 51	+ 8	+ 14	+ 2
·6	+ 8	− 2	− 40	+ 21	+ 2	+ 10	·6	+ 6	− 4	− 55	+ 8	+ 10	+ 6
·7	+ 17	+ 2	− 44	+ 32	− 2	+ 7	·7	+ 15	− 1	− 56	+ 17	+ 5	+ 4
·8	+ 11	+ 5	− 45	+ 40	− 1	+ 3	·8	+ 8	+ 2	− 53	+ 22	+ 6	+ 2
·9	− 4	+ 7	− 45	+ 35	+ 2	+ 5	·9	− 7	+ 3	− 51	+ 16	+ 8	− 2
2·0	− 6	+ 5	− 45	+ 27	+ 2	+ 7	7·0	− 9	+ 1	− 47	+ 5	+ 8	− 5
·1	+ 11	+ 4	− 43	+ 26	− 2	+ 17	·1	+ 7	0	− 42	+ 4	+ 3	− 5
·2	+ 26	+ 5	− 38	+ 34	− 6	+ 27	·2	+ 22	+ 2	− 36	+ 12	− 1	− 4
·3	+ 22	+ 5	− 38	+ 40	− 3	+ 35	·3	+ 18	+ 3	− 33	+ 18	+ 1	− 8
·4	+ 6	+ 3	− 41	+ 36	+ 3	+ 42	·4	+ 2	+ 2	− 34	+ 14	+ 7	− 11
·5	+ 1	0	− 49	+ 26	+ 5	+ 41	·5	− 4	− 1	− 40	+ 4	+ 9	− 7
·6	+ 13	− 1	− 57	+ 26	+ 1	+ 39	·6	+ 7	− 2	− 45	+ 4	+ 5	− 3
·7	+ 23	+ 2	− 60	+ 35	− 3	+ 23	·7	+ 17	+ 2	− 46	+ 13	+ 1	− 9
·8	+ 17	+ 4	− 61	+ 41	− 2	+ 7	·8	+ 11	+ 5	− 44	+ 19	+ 1	− 14
·9	+ 3	+ 5	− 61	+ 34	+ 1	− 4	·9	− 3	+ 6	− 43	+ 12	+ 3	− 12
3·0	+ 2	+ 3	− 61	+ 24	+ 1	− 16	8·0	− 5	+ 5	− 40	+ 2	+ 3	− 10
·1	+ 18	+ 2	− 58	+ 23	− 2	− 10	·1	+ 11	+ 4	− 34	+ 1	− 1	− 7
·2	+ 32	+ 3	− 53	+ 31	− 5	− 3	·2	+ 26	+ 5	− 26	+ 10	− 6	− 3
·3	+ 28	+ 3	− 53	+ 37	− 1	+ 10	·3	+ 22	+ 6	− 21	+ 15	− 3	− 4
·4	+ 11	+ 1	− 56	+ 33	+ 6	+ 22	·4	+ 5	+ 4	− 21	+ 11	+ 2	− 4
·5	+ 6	− 2	− 63	+ 23	+ 9	+ 29	·5	0	+ 1	− 25	+ 2	+ 4	− 3
·6	+ 17	− 3	− 70	+ 23	+ 7	+ 35	·6	+ 11	− 1	− 28	+ 2	+ 1	− 1
·7	+ 26	0	− 73	+ 32	+ 4	+ 31	·7	+ 20	+ 2	− 28	+ 11	− 4	− 3
·8	+ 20	+ 2	− 74	+ 38	+ 6	+ 26	·8	+ 14	+ 5	− 25	+ 16	− 3	− 4
·9	+ 5	+ 3	− 74	+ 31	+ 10	+ 25	·9	0	+ 6	− 22	+ 10	− 1	− 4
4·0	+ 3	+ 1	− 73	+ 21	+ 11	+ 23	9·0	− 2	+ 4	− 17	0	− 1	− 4
·1	+ 19	0	− 70	+ 19	+ 7	+ 30	·1	+ 13	+ 3	− 12	− 2	− 5	+ 1
·2	+ 32	+ 1	− 64	+ 28	+ 3	+ 37	·2	+ 26	+ 3	− 5	+ 7	− 8	+ 5
·3	+ 28	+ 2	− 63	+ 33	+ 6	+ 36	·3	+ 20	+ 4	− 1	+ 12	− 5	+ 4
·4	+ 11	0	− 65	+ 29	+ 12	+ 35	·4	+ 2	+ 2	− 2	+ 7	+ 1	+ 3
·5	+ 5	− 4	− 72	+ 19	+ 14	+ 35	·5	− 5	− 1	− 6	− 3	+ 4	+ 2
·6	+ 15	− 5	− 79	+ 18	+ 10	+ 34	·6	+ 5	− 3	− 11	− 3	+ 1	+ 1
·7	+ 24	− 2	− 81	+ 27	+ 6	+ 26	·7	+ 13	0	− 11	+ 5	− 3	0
·8	+ 18	+ 1	− 81	+ 32	+ 7	+ 17	·8	+ 5	+ 3	− 9	+ 10	− 2	− 1
·9	+ 2	+ 2	− 80	+ 26	+ 10	+ 7	·9	− 11	+ 3	− 6	+ 4	+ 2	− 1

Digitized by Google

Corrections applicable to the Screw-Readings of the Supplementary Microscopes (Unity = $0^{r}\cdot0001$).

r.	a.	b.	c.	d.	r.	a.	b.	c.	d.
0·0	+ 1	− 6	− 3	+ 1	5·0	0	− 26	− 1	− 23
·1	+ 4	+ 6	− 7	+ 8	·1	+ 2	− 12	− 5	− 17
·2	+ 4	+ 3	− 11	+ 8	·2	+ 2	− 14	− 8	− 16
·3	+ 2	− 14	− 9	+ 2	·3	− 1	− 29	− 6	− 23
·4	+ 2	− 23	− 2	− 6	·4	− 1	− 37	+ 2	− 30
·5	+ 4	− 9	+ 6	− 7	·5	0	− 21	+ 10	− 32
·6	+ 5	+ 12	+ 9	− 5	·6	0	0	+ 14	− 30
·7	+ 4	+ 14	+ 7	− 5	·7	− 1	+ 4	+ 12	− 29
·8	+ 3	− 4	+ 2	− 7	·8	− 3	− 13	+ 7	− 32
·9	+ 4	− 19	− 3	− 8	·9	− 3	− 26	+ 3	− 32
1·0	+ 8	− 15	− 6	− 3	6·0	+ 1	− 21	0	− 28
·1	+ 10	− 3	− 10	+ 3	·1	+ 3	− 6	− 4	− 21
·2	+ 9	− 5	− 12	+ 3	·2	+ 3	− 7	− 7	− 20
·3	+ 6	− 22	− 10	− 4	·3	0	− 21	− 5	− 26
·4	+ 5	− 31	− 2	− 12	·4	− 1	− 28	+ 2	− 33
·5	+ 5	− 17	+ 6	− 15	·5	− 1	− 11	+ 10	− 35
·6	+ 5	+ 4	+ 10	− 14	·6	0	+ 11	+ 14	− 33
·7	+ 2	+ 6	+ 9	− 14	·7	− 2	+ 16	+ 12	− 32
·8	0	− 12	+ 4	− 17	·8	− 4	0	+ 7	− 34
·9	0	− 26	+ 1	− 18	·9	− 4	− 12	+ 3	− 34
2·0	+ 3	− 22	− 2	− 14	7·0	− 1	− 6	0	− 29
·1	+ 5	− 9	− 6	− 7	·1	+ 2	+ 8	− 4	− 22
·2	+ 5	− 12	− 9	− 6	·2	+ 2	+ 7	− 7	− 21
·3	+ 3	− 28	− 7	− 12	·3	− 1	− 8	− 5	− 27
·4	+ 2	− 37	0	− 19	·4	− 2	− 15	+ 2	− 34
·5	+ 3	− 22	+ 8	− 21	·5	− 1	+ 1	+ 10	− 36
·6	+ 1	− 1	+ 11	− 19	·6	− 1	+ 23	+ 14	− 34
·7	+ 2	+ 1	+ 9	− 18	·7	− 2	+ 27	+ 12	− 33
·8	+ 1	− 16	+ 4	− 20	·8	− 4	+ 11	+ 7	− 35
·9	+ 1	− 31	0	− 20	·9	− 4	− 2	+ 3	− 35
3·0	+ 5	− 26	− 3	− 15	8·0	0	+ 4	0	− 30
·1	+ 7	− 13	− 6	− 11	·1	+ 2	+ 17	− 4	− 22
·2	+ 6	− 15	− 8	− 9	·2	+ 2	+ 15	− 8	− 19
·3	+ 3	− 31	− 5	− 16	·3	− 1	− 2	− 6	− 24
·4	+ 2	− 39	+ 3	− 24	·4	− 2	− 10	+ 1	− 29
·5	+ 2	− 24	+ 12	− 26	·5	− 1	+ 5	+ 9	− 29
·6	+ 2	− 3	+ 16	− 24	·6	− 1	+ 26	+ 12	− 25
·7	0	0	+ 15	− 24	·7	− 2	+ 29	+ 10	− 23
·8	− 2	− 17	+ 11	− 27	·8	− 4	+ 11	+ 5	− 23
·9	− 2	− 31	+ 8	− 28	·9	− 4	− 3	+ 1	− 22
4·0	+ 1	− 26	+ 6	− 24	9·0	− 1	+ 2	− 3	− 16
·1	+ 3	− 13	+ 1	− 17	·1	+ 2	+ 14	− 7	− 7
·2	+ 3	− 15	− 2	− 16	·2	+ 2	+ 11	− 10	− 4
·3	0	− 31	− 1	− 22	·3	− 1	− 5	− 8	− 9
·4	− 1	− 39	+ 5	− 29	·4	− 1	− 14	− 1	− 14
·5	0	− 24	+ 13	− 30	·5	− 1	0	+ 7	− 13
·6	0	− 3	+ 16	− 27	·6	0	+ 20	+ 11	− 10
·7	− 2	0	+ 13	− 26	·7	− 1	+ 22	+ 9	− 7
·8	− 4	− 17	+ 7	− 28	·8	− 3	+ 5	+ 4	− 7
·9	− 3	− 31	+ 3	− 28	·9	− 3	− 10	0	− 6

The excentricity of the Circles is very small; thus, as great care was taken in their original adjustment, the microscopes read very nearly alike. Although the progressive errors of most of the screws are quite sensible, the periodic errors of all of them, except D, are small; so that, except for D, an error of even $\pm0^{r}\cdot1$ in the argument will seldom produce a difference $\pm0^{r}\cdot001$ in the tabular correction for error of the screw. It thus becomes possible, instead of correcting the readings of each of the individual microscopes, to apply the correction for screw-error to the sum of the screw-readings, by employing as argument the reading of the screw D in the case of the microscopes of the East Pier, and the "mean of screw-readings" as argument for those of the West Pier.

In practice the readings of the microscope-heads are estimated to $0^{r}\cdot001$—a quantity that, in the sum of the readings of the six microscopes, is equivalent to $0''\cdot01$.

Digitized by Google

The following simple table, used in the way above described, thus gives the corrections applicable to the Circle readings :—

Table of Corrections applicable to the sum of the Microscope-Readings on account of Errors of the Screws (Unity $= 0''{\cdot}01$).

East Pier.				West Pier.			
Argument.		Argument.		Argument.		Argument.	
2r·0	− 3	5r·0	− 1	2r·0	− 1	5r·0	− 6
·1	− 3	·1	− 1	·1	+ 2	·1	− 4
·2	− 4	·2	− 1	·2	+ 4	·2	− 2
·3	− 4	·3	− 1	·3	+ 6	·3	0
·4	− 1	·4	+ 2	·4	+ 5	·4	− 2
·5	+ 3	·5	+ 5	·5	+ 2	·5	− 4
·6	+ 4	·6	+ 6	·6	+ 2	·6	− 4
·7	0	·7	+ 3	·7	+ 2	·7	− 2
·8	− 3	·8	0	·8	+ 1	·8	− 3
·9	− 4	·9	− 1	·9	− 3	·9	− 5
3 ·0	− 2	6 ·0	+ 1	3 ·0	− 6	6 ·0	− 6
·1	− 4	·1	+ 1	·1	− 3	·1	− 3
·2	− 3	·2	− 1	·2	0	·2	− 1
·3	− 4	·3	0	·3	+ 3	·3	0
·4	− 1	·4	+ 3	·4	+ 1	·4	− 2
·5	+ 3	·5	+ 7	·5	+ 1	·5	− 3
·6	+ 3	·6	+ 9	·6	+ 1	·6	− 2
·7	+ 1	·7	+ 5	·7	+ 2	·7	− 2
·8	− 1	·8	+ 1	·8	+ 3	·8	− 1
·9	− 3	·9	+ 1	·9	0	·9	− 3
4 ·0	− 2	7 ·0	+ 1	4 ·0	− 2	7 ·0	− 5
·1	− 1	·1	+ 1	·1	+ 1	·1	− 3
·2	− 3	·2	+ 1	·2	+ 4	·2	− 1
·3	− 3	·3	+ 1	·3	+ 5	·3	0
·4	0	·4	+ 4	·4	+ 2	·4	− 2
·5	+ 4	·5	+ 6	·5	0	·5	− 4
·6	+ 5	·6	+ 8	·6	− 1	·6	− 3
·7	+ 2	·7	+ 5	·7	+ 1	·7	− 3
·8	− 1	·8	+ 2	·8	0	·8	− 2
·9	− 2	·9	+ 1	·9	− 3	·9	− 3
5 ·0	− 1	8 ·0	+ 3	5 ·0	− 6	8 ·0	− 4
Argument, Reading of D.				Argument, Mean of Readings.			

It should be mentioned, with regard to the effects of wear on the progressive errors of the screws, that the same plan has been adopted as that which was employed originally at Greenwich and subsequently at the Cape in the old non-reversible Transit Circles—viz. to reverse the directions of the heads of opposite microscopes, so that the effects of wear on the screw produce opposite effects in the micrometer readings. Experience has shown (*Cape Catalogue for* 1890, p. xiv) that this plan is very effectual, and, that whilst the wear of even the best screws is very marked in the course of ten years, its effect is nearly eliminated by the plan in question in the mean of the readings of six microscopes.

INVESTIGATION OF THE ERRORS OF THE PIVOTS.

The pivots of the instrument, as already mentioned, are of flint-hard steel and rest on cast-iron **V** bearings.

The method employed for investigation of their errors is similar to that which was introduced by Airy in his Transit Circle at Greenwich, viz. the temporary conversion of the horizontal axis into a horizontal collimator. The advantages of this method are very great, because one determines the combined effects of the errors of both pivots in a single operation.

An object-glass, rigidly mounted in a slightly cone-shaped tube, fits into a corresponding slightly conical hole in one pivot; an apparatus carrying a fine mark, with means for its adjustment both for focus and centring, is screwed into a slightly cone-shaped mounting precisely similar to that in which the pivot-object-glass fits. Thus the object-glass and mark can be interchanged in the pivots. The mark is first accurately focussed in the principal focus of the object-glass of the opposite pivot, when it can be viewed by means of another rigidly mounted telescope whose axis is parallel to, and nearly coincident with, that of the axis of the Transit Circle. By a series of preliminary

Digitized by Google

trials the mark is approximately centred with the axis of rotation of the horizontal collimator, and then first the horizontal and next the vertical co-ordinates of the mark are measured at each 5° of the Circle.

In Airy's arrangement of the method, the mark consists of a minute hole illuminated from behind, its diameter being diminished by a positive lens within the focus of the pivot-objective. But the mark so formed, at least in the case of that supplied for our old non-reversible Transit Circle at the Cape, was not satisfactory; its image was neither sharp nor round, and its centre might therefore be differently estimated in different N.P.D.'s of the Transit Circle. Recourse was therefore made to the "mercury dot," described in *Monthly Notices*, vol. lix. p. 125. It is prepared by boiling a little mercury in an iron spoon and passing a circular microscope-slide glass cover rapidly through the rising vapour of mercury. This vapour condenses upon the glass in minute globules, of which all but two or three of the most suitable near the centre of the disc are removed (under the microscope) with the aid of a small camel-hair brush. Upon another similar glass disc a small quantity of Canada Balsam is melted, and then the latter disc is pressed upon the disc with the mercury globules. When the Balsam has "set" the combined disc is mounted upon the centring apparatus—shown at 1 in Plate XXIII., fig. 3. The "mercury dot" is mounted in a cell which is screwed into the inner end of the focussing tube 2. At the visible end of tube 2 is a frosted glass cover upon which the light of an electric lamp shines and thus gives a field of uniform illumination in the telescope. The plate shows at 6 the hollow, slightly coned adapter that is ground to fit the hollow pivot. The centring apparatus screws into this adapter. The handle 3 has a screw cut upon it at 7, similar to that cut upon the centring apparatus 1, and is used to force the adapter firmly into the pivot, or to withdraw it, for the purpose of mounting the dot on the opposite pivot. The dot is centred with the aid of a key that fits the ends of the centring screws which are shown in the plate. The object-glass is shown at 4, fitted in its adapter, which, like the adapter of the dot-apparatus, is ground to fit the hollow at either pivot. The handle at 5 is shown, screwed into the object-glass adapter, ready for entering the latter into the pivot.

The viewing telescope of the pivot-tester is also shown in the plate; it can be attached to the West Pier by screws passing through its flange and entering 10, Plate VIII.

The object-glass of the telescope is of 2 inches aperture and about 2 feet focal length, but its equivalent focus is increased to about 8 feet by the introduction of a negative combination between the objective and the focal point.

The micrometer employed is not that originally constructed for the instrument, but one adapted from a measuring machine by Repsolds belonging to the Observatory. The screw of this micrometer is cut with a very fine thread, viz. 5 revolutions = 1 millimetre, and, from the form of the construction of the micrometer, resembling in principle that of the travelling wire micrometer (Plate XIX., fig. *a*), it gives most delicate and consistent results.

The pivot-error-telescope was firmly mounted on the pier of the Transit Circle, and the value of one revolution of the screw was determined on 1902 February 6, with very satisfactory accuracy, to be $= 17''{\cdot}1 = 1{\cdot}14$ seconds of time; or one division of the head $= 0^s{\cdot}0114$.

In order to eliminate the possible effects of periodic error of the screw on the determination of pivot error, three precautions were taken, viz. :—

1. To employ in the micrometer two spider webs separated by $1\frac{1}{2}$ revolutions and to make all the pointings with both of these webs. In all good screws the periodic errors depending on sin $2u$ and cos $2u$ are insignificant, and, in the mean of two readings of the drum-head made at points 180° apart, all periodic terms depending on sine and cosine disappear.

2. To further increase the reliability of the result the excentricity of the dot was shifted after each set by turning the inner tube with respect to the outer one, or another dot was employed, so as to give not only a different amount but a different direction of excentricity. The excentricity was always kept small.

3. To avoid personality no less than twelve different observers took part in the work.

Two series of observations have been made—the first in 1902, the second in 1904.

The first series consisted of sixteen sets—viz. :—

Sets	I.	to IV.	Clamp W.
„	V.	to VIII.	„ E.
„	IX.	to XII.	„ E.
„	XIII.	to XVI.	„ W.

In Series I. a sub-set consisted of single pointings made with increasing readings of the Circle at each successive 5° of the complete revolution (seventy-two pointings), each made with the approximate micrometer reading R, and

Digitized by Google

then, immediately afterwards by another observer, a similar series at successively diminishing readings with the approximate reading R + 1ʳ·5.

All these observations were made with the micrometer screw horizontal and its head to the right—*i.e.* to the south. Then the micrometer was rotated 90° (micrometer head above), and a similar sub-set of observations by two observers was made. This completed the first sub-set of Set I.

The next four sub-sets were precisely similar. Five sub-sets completed the full Set I. After each full set the tube carrying the dot was rotated, or another dot was observed, so as to give another excentricity.

At the end of four full sets the Transit Circle was reversed, the pivot object-glass and "dot" being exchanged in the pivots, so that all the observations might be made from the West Pier, to which alone the pivot-testing telescope is attachable. Each set was separately reduced.

In the second series, which was made in 1904, a set consisting of six sub-sets, each of which was similar to one sub-set of Series I., was made. Six different observers in all were employed, each one making a half sub-set of observations, as in Series I., one assistant setting the circle and recording whilst the other observed.

The complete Series II. consisted of four sets, containing in all twenty-four sub-sets, viz. :—

Set I.	Clamp E.	Position I.
,, II.	,, W.	,, I.
,, III.	,, W.	,, I.
,, IV.	,, E.	,, I.

The tube containing the dot was rotated 90° between each set. Let us take, for example, Set I. of Series II. (Table I., p. 69).

The sub-sets are numbered 1, 2, 3, 4, 5, 6; the results given in Table I. are each the excess of the observed over the mean reading.

If the pivots are true cylinders and the observations free from error, the quantities in Table I. would be all represented by equations of the form :—

$$\text{Micrometer head right} \quad a \sin \text{N.P.D.} + b \cos \text{N.P.D.} = n$$
$$\text{,, ,, above} \quad a \cos \text{N.P.D.} - b \sin \text{N.P.D.} = n'$$

Forming equations of this type and solving them by least squares we get :—

From head right $a = -0{\cdot}0648$ weight 36; $b = -0{\cdot}1049$ weight 36,
,, ,, above $a = -{\cdot}0689$,, 36; $b = -{\cdot}1043$,, 36.

Adopting the mean values $a = -{\cdot}0668$ and $b = -{\cdot}1046$ and substituting, we get the residuals which are given in column 1 of Table II. (p. 70), and which represent the combined effects of pivot error and error of observation.

In column 4 of the same table are given residuals similarly obtained from Set IV., which was made in the same position of the instrument. The values of a and b were :—

Micrometer head right $a + 0{\cdot}0874$, $b - 0{\cdot}0460$,
,, ,, above $a + {\cdot}0843$, $b - {\cdot}0518$.

The mean values $a = +0{\cdot}0859$, and $b = -0{\cdot}0489$ were adopted.

In Table III. (p. 71) the corresponding results are given for Sets II. and III. of Series II., when the observations were made in Position I., Clamp West. The adopted values of a and b for these sets are subsequently tabulated.

Digitized by Google

TABLE I.—Observations for Pivot-Error. Set I. Series II. (1904). Position I.* Clamp East.

Micrometer Right (Excess over Mean).

N.P.D.	1	2	3	4	5	6	Mean.	N.P.D.	1	2	3	4	5	6	Mean.
°	r	r	r	r	r	r	r	°	r	r	r	r	r	r	r
0	−·1189	−·1133	−·1120	−·1129	−·1078	−·0954	−·1100	180	+·0896	+·0957	+·0940	+·0851	+·0962	+·0816	+·0904
5	−·1254	−·1303	−·1230	−·1209	−·1223	−·1159	−·1230	185	+·0996	+·0927	+·0980	+·0956	+·0962	+·0906	+·0954
10	−·1394	−·1368	−·1290	−·1234	−·1328	−·1254	−·1311	190	+·1051	+·0922	+·0965	+·0941	+·0912	+·0956	+·0958
15	−·1374	−·1363	−·1255	−·1319	−·1388	−·1374	−·1345	195	+·0986	+·0927	+·0920	+·1026	+·0942	+·1021	+·0970
20	−·1509	−·1373	−·1275	−·1379	−·1423	−·1369	−·1388	200	+·1006	+·0917	+·0960	+·1061	+·0922	+·0916	+·0964
25	−·1539	−·1463	−·1370	−·1479	−·1453	−·1409	−·1452	205	+·1066	+·0937	+·1030	+·1036	+·0932	+·0996	+·0999
30	−·1529	−·1553	−·1495	−·1609	−·1553	−·1579	−·1553	210	+·1086	+·1067	+·0975	+·1031	+·0912	+·0991	+·1010
35	−·1444	−·1538	−·1500	−·1479	−·1458	−·1444	−·1477	215	+·1096	+·1032	+·0940	+·1026	+·0867	+·1006	+·0994
40	−·1464	−·1508	−·1515	−·1374	−·1478	−·1544	−·1480	220	+·1081	+·1002	+·0980	+·0971	+·0862	+·0976	+·0979
45	−·1459	−·1393	−·1410	−·1359	−·1433	−·1409	−·1410	225	+·0941	+·0977	+·0940	+·0961	+·0927	+·0901	+·0941
50	−·1344	−·1423	−·1405	−·1334	−·1263	−·1379	−·1358	230	+·0926	+·1007	+·0915	+·1026	+·0952	+·0921	+·0958
55	−·1489	−·1308	−·1350	−·1269	−·1353	−·1339	−·1351	235	+·1021	+·0972	+·0920	+·1016	+·0942	+·0996	+·0978
60	−·1384	−·1398	−·1410	−·1364	−·1358	−·1284	−·1366	240	+·0961	+·0947	+·0880	+·0921	+·0912	+·0886	+·0918
65	−·1189	−·1183	−·1230	−·1219	−·1153	−·1064	−·1173	245	+·0976	+·0862	+·0875	+·0916	+·0942	+·0931	+·0917
70	−·1054	−·1068	−·1150	−·1214	−·1013	−·1099	−·1100	250	+·0911	+·0887	+·0945	+·0881	+·0947	+·0851	+·0904
75	−·0999	−·1053	−·0990	−·1034	−·0863	−·0969	−·0985	255	+·0856	+·0912	+·0840	+·0906	+·0862	+·0851	+·0871
80	−·0894	−·0838	−·0830	−·0874	−·0883	−·0839	−·0860	260	+·0936	+·0912	+·0755	+·0826	+·0792	+·0846	+·0844
85	−·0624	−·0653	−·0665	−·0749	−·0688	−·0819	−·0700	265	+·0821	+·0892	+·0745	+·0731	+·0732	+·0836	+·0793
90	−·0634	−·0468	−·0540	−·0619	−·0513	−·0564	−·0556	270	+·0791	+·0767	+·0715	+·0681	+·0782	+·0776	+·0752
95	−·0394	−·0383	−·0385	−·0399	−·0473	−·0414	−·0408	275	+·0671	+·0687	+·0655	+·0601	+·0637	+·0671	+·0654
100	−·0234	−·0203	−·0245	−·0264	−·0258	−·0239	−·0240	280	+·0591	+·0657	+·0550	+·0566	+·0597	+·0566	+·0588
105	−·0234	−·0223	−·0150	−·0144	−·0198	−·0024	−·0162	285	+·0536	+·0582	+·0560	+·0526	+·0547	+·0476	+·0538
110	−·0009	+·0032	+·0060	+·0006	−·0008	+·0051	+·0022	290	+·0416	+·0532	+·0510	+·0491	+·0482	+·0536	+·0494
115	+·0171	+·0107	+·0160	+·0061	+·0232	+·0106	+·0139	295	+·0356	+·0477	+·0375	+·0331	+·0382	+·0341	+·0377
120	+·0286	+·0222	+·0215	+·0246	+·0272	+·0321	+·0260	300	+·0181	+·0292	+·0290	+·0291	+·0372	+·0226	+·0275
125	+·0416	+·0347	+·0410	+·0301	+·0282	+·0311	+·0344	305	+·0056	+·0147	+·0130	+·0151	+·0212	+·0226	+·0154
130	+·0506	+·0482	+·0460	+·0431	+·0392	+·0511	+·0464	310	+·0106	+·0072	+·0060	+·0096	+·0137	+·0031	+·0084
135	+·0511	+·0557	+·0475	+·0526	+·0432	+·0486	+·0498	315	−·0084	−·0138	−·0040	−·0099	−·0033	−·0074	−·0078
140	+·0626	+·0612	+·0560	+·0596	+·0562	+·0641	+·0599	320	−·0204	−·0173	−·0215	−·0159	−·0123	−·0234	−·0185
145	+·0706	+·0787	+·0655	+·0686	+·0722	+·0736	+·0715	325	−·0359	−·0398	−·0270	−·0299	−·0283	−·0374	−·0330
150	+·0891	+·0907	+·0790	+·0911	+·0817	+·0851	+·0861	330	−·0484	−·0548	−·0440	−·0374	−·0413	−·0514	−·0462
155	+·0726	+·0842	+·0790	+·0776	+·0822	+·0816	+·0795	335	−·0599	−·0608	−·0535	−·0534	−·0563	−·0659	−·0583
160	+·0866	+·0882	+·0900	+·0811	+·0887	+·0846	+·0865	340	−·0599	−·0668	−·0645	−·0609	−·0593	−·0594	−·0618
165	+·0891	+·0857	+·0905	+·0781	+·0797	+·0721	+·0825	345	−·0729	−·0813	−·0710	−·0594	−·0708	−·0704	−·0710
170	+·0806	+·0852	+·0930	+·0821	+·0857	+·0866	+·0855	350	−·0884	−·1063	−·0920	−·0834	−·0888	−·0859	−·0908
175	+·0906	+·0907	+·0950	+·0786	+·0952	+·0851	+·0892	355	−·1059	−·1043	−·0995	−·0994	−·0983	−·1019	−·1015
Observer	A. P.	M.	P.	R. C.	C.	W. W.		Observer	A. P.	M.	P.	R. C.	C.	W. W.	

Micrometer Above (Excess over Mean).

0	−·0792	−·0718	−·0930	−·0773	−·0698	−·0676	−·0765	180	+·0713	+·0657	+·0715	+·0707	+·0572	+·0639	+·0667
5	−·0602	−·0583	−·0650	−·0608	−·0583	−·0611	−·0606	185	+·0553	+·0527	+·0665	+·0582	+·0532	+·0589	+·0575
10	−·0447	−·0348	−·0435	−·0413	−·0463	−·0491	−·0433	190	+·0458	+·0437	+·0475	+·0467	+·0397	+·0549	+·0464
15	−·0372	−·0288	−·0350	−·0288	−·0393	−·0336	−·0338	195	+·0413	+·0257	+·0415	+·0407	+·0392	+·0419	+·0384
20	−·0212	−·0303	−·0200	−·0203	−·0263	−·0171	−·0225	200	+·0293	+·0297	+·0320	+·0282	+·0247	+·0299	+·0290
25	−·0097	−·0073	−·0085	−·0143	−·0088	−·0041	−·0088	205	+·0203	+·0272	+·0315	+·0147	+·0172	+·0179	+·0215
30	+·0033	+·0007	−·0010	−·0053	+·0007	−·0001	−·0003	210	+·0163	+·0112	+·0215	+·0102	+·0027	+·0089	+·0118
35	+·0128	+·0017	−·0010	+·0072	+·0132	+·0114	+·0076	215	−·0007	+·0042	+·0140	−·0018	−·0088	−·0041	+·0005
40	+·0208	+·0177	+·0145	+·0207	+·0157	+·0264	+·0193	220	−·0117	−·0043	−·0080	−·0213	−·0223	−·0161	−·0140
45	+·0398	+·0332	+·0130	+·0502	+·0322	+·0389	+·0346	225	−·0242	−·0253	−·0040	−·0308	−·0303	−·0311	−·0243
50	+·0513	+·0387	+·0270	+·0337	+·0442	+·0449	+·0400	230	−·0417	−·0413	−·0295	−·0423	−·0353	−·0441	−·0390
55	+·0608	+·0597	+·0445	+·0497	+·0522	+·0564	+·0539	235	−·0532	−·0588	−·0370	−·0453	−·0423	−·0511	−·0480
60	+·0688	+·0662	+·0575	+·0607	+·0617	+·0659	+·0635	240	−·0657	−·0608	−·0535	−·0638	−·0543	−·0651	−·0605
65	+·0853	+·0757	+·0680	+·0727	+·0677	+·0709	+·0734	245	−·0762	−·0563	−·0610	−·0663	−·0538	−·0691	−·0638
70	+·0753	+·0767	+·0590	+·0702	+·0702	+·0719	+·0706	250	−·0767	−·0698	−·0770	−·0738	−·0723	−·0831	−·0755
75	+·0828	+·0802	+·0695	+·0677	+·0682	+·0729	+·0736	255	−·0822	−·0768	−·0920	−·0848	−·0743	−·0831	−·0822
80	+·0878	+·0852	+·0740	+·0917	+·0762	+·0809	+·0826	260	−·0947	−·0863	−·0950	−·0973	−·0788	−·0841	−·0894
85	+·0973	+·0927	+·0850	+·0857	+·0892	+·0949	+·0908	265	−·1087	−·0913	−·1025	−·0983	−·0923	−·0921	−·0975
90	+·1013	+·0957	+·0840	+·0907	+·0897	+·0969	+·0931	270	−·1172	−·1033	−·1100	−·1043	−·0988	−·1031	−·1061
95	+·1123	+·1052	+·1005	+·1052	+·1017	+·1069	+·1053	275	−·1207	−·0993	−·1080	−·1113	−·1008	−·1021	−·1070
100	+·1208	+·1017	+·1140	+·1197	+·1067	+·1089	+·1120	280	−·1262	−·1018	−·1035	−·1223	−·1018	−·1051	−·1101
105	+·1283	+·1082	+·1060	+·1212	+·1117	+·1129	+·1147	285	−·1247	−·1053	−·1060	−·1218	−·1128	−·1081	−·1131
110	+·1163	+·1117	+·1120	+·1302	+·1222	+·1209	+·1189	290	−·1302	−·1143	−·0985	−·1148	−·1158	−·1131	−·1145
115	+·1278	+·1167	+·1150	+·1302	+·1252	+·1229	+·1230	295	−·1362	−·1208	−·1100	−·1223	−·1163	−·1186	−·1207
120	+·1343	+·1267	+·1265	+·1337	+·1297	+·1249	+·1293	300	−·1367	−·1158	−·1150	−·1198	−·1238	−·1121	−·1205
125	+·1383	+·1257	+·1150	+·1242	+·1257	+·1299	+·1265	305	−·1347	−·1253	−·1200	−·1283	−·1208	−·1181	−·1245
130	+·1403	+·1197	+·1140	+·1302	+·1282	+·1229	+·1259	310	−·1387	−·1248	−·1240	−·1218	−·1258	−·1226	−·1263
135	+·1303	+·1192	+·1215	+·1257	+·1167	+·1219	+·1226	315	−·1252	−·1188	−·1260	−·1258	−·1123	−·1191	−·1212
140	+·1263	+·1192	+·1185	+·1237	+·1152	+·1169	+·1200	320	−·1302	−·1283	−·1055	−·1238	−·1163	−·1266	−·1218
145	+·1338	+·1062	+·1405	+·1142	+·1217	+·1099	+·1211	325	−·1327	−·1188	−·1190	−·1153	−·1223	−·1216	−·1216
150	+·1168	+·1087	+·1130	+·1217	+·1147	+·0989	+·1123	330	−·1207	−·1158	−·1105	−·1158	−·1178	−·1176	−·1164
155	+·1118	+·1092	+·1165	+·1202	+·1082	+·1049	+·1118	335	−·1127	−·1048	−·1025	−·1138	−·1063	−·1106	−·1085
160	+·1048	+·1007	+·0985	+·1147	+·1017	+·0949	+·1026	340	−·1132	−·1083	−·1145	−·1138	−·1018	−·1161	−·1113
165	+·1038	+·0827	+·0940	+·0922	+·0877	+·0919	+·0921	345	−·1002	−·0963	−·1180	−·1083	−·0958	−·1101	−·1048
170	+·0858	+·0827	+·0980	+·0842	+·0732	+·0769	+·0835	350	−·0977	−·0933	−·0950	−·0978	−·0898	−·0941	−·0946
175	+·0748	+·0687	+·0870	+·0802	+·0642	+·0779	+·0755	355	−·0892	−·0908	−·0995	−·0903	−·0798	−·0751	−·0875
Observer	R. C.	A. P.	W. W.	C.	M.	P.		Observer	R. C.	A. P.	W. W.	C.	M.	P.	

* Position I. signifies that the object-glass is attached to that end of the tube which is next to 0° on the fixed Circle.
Position II. when the object-glass is attached to the end of the tube adjacent to 180° on the fixed Circle.

Digitized by Google

TABLE II.—Results of Observations for Pivot-Error. Series II. (1904). Position I. Clamp East.

Calculated *minus* Observed (Unity = $0^{r}\cdot0001$).

Micrometer Head Right (*Horizontal Co-ordinates*). *Micrometer Head Above* (*Vertical Co-ordinates*).

N.P.D.	Set I.	Set IV.	N.P.D.	Set I.	Set IV.	N.P.D.	Set I.	Set IV.	N.P.D.	Set I.	Set IV.
°			°			°			°		
0	+ 55	0	180	+ 142	+ 129	0	+ 97	+ 74	180	+ 1	+ 40
5	+ 130	+ 52	185	+ 145	+ 176	5	+ 32	− 19	185	− 1	+ 36
10	+ 165	+ 93	190	+ 188	+ 221	10	− 43	+ 42	190	+ 12	+ 39
15	+ 162	+ 93	195	+ 214	+ 198	15	− 36	− 43	195	− 10	+ 6
20	+ 177	+ 154	200	+ 247	+ 235	20	− 45	− 68	200	− 20	+ 30
25	+ 222	+ 221	205	+ 230	+ 271	25	− 75	− 48	205	− 52	+ 6
30	+ 314	+ 238	210	+ 229	+ 280	30	− 52	− 48	210	− 63	− 21
35	+ 238	+ 204	215	+ 244	+ 238	35	− 22	− 38	215	− 59	+ 51
40	+ 250	+ 228	220	+ 252	+ 262	40	− 32	− 41	220	− 21	+ 19
45	+ 199	+ 182	225	+ 271	+ 262	45	− 78	− 52	225	− 25	+ 23
50	+ 173	+ 176	230	+ 227	+ 205	50	− 29	− 33	230	+ 19	− 8
55	+ 203	+ 209	235	+ 170	+ 173	55	− 66	− 85	235	+ 7	− 8
60	+ 265	+ 261	240	+ 183	+ 202	60	− 64	− 74	240	+ 34	− 5
65	+ 126	+ 169	245	+ 130	+ 175	65	− 70	− 62	245	− 26	− 68
70	+ 114	+ 132	250	+ 82	+ 99	70	+ 49	+ 7	250	0	− 5
75	+ 69	+ 100	255	+ 45	+ 30	75	+ 102	+ 50	255	− 16	− 12
80	+ 20	+ 44	260	− 5	+ 17	80	+ 88	+ 69	260	− 20	− 25
85	− 56	− 16	265	− 37	− 3	85	+ 76	+ 36	265	− 9	− 13
90	− 112	− 86	270	− 84	− 63	90	+ 115	+ 30	270	+ 15	+ 2
95	− 166	− 146	275	− 80	− 90	95	+ 47	+ 4	275	− 30	− 4
100	− 235	− 212	280	− 112	− 110	100	+ 26	− 14	280	− 45	+ 6
105	− 212	− 209	285	− 164	− 131	105	+ 37	− 12	285	− 53	+ 17
110	− 292	− 286	290	− 225	− 148	110	+ 22	− 40	290	− 66	− 7
115	− 303	− 285	295	− 214	− 188	115	00	− 48	295	− 23	+ 47
120	− 315	− 332	300	− 220	− 255	120	− 54	− 94	300	− 34	+ 68
125	− 291	− 279	305	− 208	− 239	125	− 26	− 53	305	+ 6	+ 7
130	− 303	− 254	310	− 245	− 254	130	− 28	− 55	310	+ 32	+ 13
135	− 230	− 225	315	− 190	− 207	135	− 14	− 41	315	0	+ 38
140	− 229	− 196	320	− 186	− 184	140	− 15	− 90	320	+ 33	+ 54
145	− 242	− 163	325	− 142	− 188	145	− 63	− 111	325	+ 68	+ 98
150	− 290	− 211	330	− 109	− 167	150	− 22	− 109	330	+ 63	+ 73
155	− 131	− 142	335	− 81	− 132	155	− 71	− 50	335	+ 38	+ 79
160	− 110	− 44	340	− 137	− 152	160	− 40	+ 16	340	+ 127	+ 118
165	+ 13	+ 36	345	− 128	− 140	165	− 5	+ 44	345	+ 132	+ 120
170	+ 59	+ 53	350	− 6	− 133	170	+ 5	+ 18	350	+ 106	+ 109
175	+ 92	+ 110	355	+ 32	− 51	175	+ 1	+ 36	355	+ 119	+ 82

By exactly similar processes we obtain the following results for the Series II. and III., Clamp West. The constants for the excentricity of the dot in each series are tabulated later.

Digitized by Google

TABLE III.—Results of Observations for Pivot-Error. Series II. (1904). Position I. Clamp West.

Calculated *minus* Observed (Unity = 0ʳ·0001).

Micrometer Head Right (*Horizontal Co-ordinates*). *Micrometer Head Above* (*Vertical Co-ordinates*).

N.P.D.	Set II.	Set III.	N.P.D.	Set II.	Set III.	N.P.D.	Set II.	Set III.	N.P.D.	Set II.	Set III.
°			°			°			°		
248	+ 14	+ 18	68	+ 142	+ 174	248	+ 7	− 27	68	− 4	− 48
253	+ 14	− 19	73	+ 106	+ 100	253	− 22	− 52	73	− 22	− 61
258	− 54	− 34	78	+ 77	+ 66	258	− 46	− 44	78	− 27	− 16
263	− 85	− 88	83	+ 15	− 14	263	− 37	− 63	83	+ 6	+ 8
268	− 120	− 122	88	− 123	− 136	268	− 73	− 45	88	+ 22	+ 61
273	− 124	− 142	93	− 154	− 184	273	− 59	− 43	93	+ 122	+ 120
278	− 115	− 118	98	− 231	− 268	278	− 23	− 19	98	+ 113	+ 133
283	− 160	− 160	103	− 267	− 269	283	− 61	− 38	103	+ 110	+ 105
288	− 151	− 162	108	− 163	− 246	288	− 37	− 44	108	+ 65	+ 71
293	− 192	− 185	113	− 221	− 221	293	+ 12	− 10	113	+ 33	+ 76
298	− 220	− 211	118	− 222	− 270	298	− 26	− 17	118	+ 17	+ 61
303	− 165	− 204	123	− 277	− 298	303	− 59	− 16	123	+ 39	+ 34
308	− 217	− 230	128	− 262	− 275	308	− 17	+ 33	128	+ 2	+ 68
313	− 235	− 205	133	− 257	− 244	313	− 20	− 8	133	+ 2	+ 28
318	− 239	− 169	138	− 232	− 219	318	+ 13	− 11	138	− 8	+ 4
323	− 193	− 172	143	− 201	− 168	323	− 26	+ 1	143	− 33	− 15
328	− 116	− 124	148	− 191	− 191	328	− 2	− 4	148	− 42	− 20
333	− 75	− 58	153	− 149	− 140	333	+ 33	+ 24	153	− 55	− 50
338	− 40	− 27	158	− 67	− 58	338	+ 3	+ 29	158	− 80	− 54
343	− 2	+ 13	163	− 39	+ 15	343	− 14	+ 18	163	− 100	− 100
348	− 14	+ 6	168	+ 38	+ 37	348	+ 40	+ 53	168	− 56	− 95
353	+ 49	+ 67	173	+ 86	+ 99	353	+ 25	+ 60	173	− 19	− 35
358	+ 122	+ 109	178	+ 148	+ 187	358	− 2	+ 41	178	− 29	− 43
3	+ 134	+ 131	183	+ 208	+ 200	3	+ 28	+ 12	183	+ 55	+ 37
8	+ 162	+ 169	188	+ 239	+ 213	8	+ 14	− 30	188	+ 9	+ 35
13	+ 197	+ 183	193	+ 234	+ 232	13	− 28	− 35	193	+ 80	+ 46
18	+ 182	+ 171	198	+ 190	+ 200	18	− 35	− 48	198	+ 59	+ 23
23	+ 222	+ 169	203	+ 202	+ 168	23	− 14	− 7	203	+ 50	+ 10
28	+ 212	+ 212	208	+ 199	+ 185	28	+ 19	+ 23	208	+ 24	− 28
33	+ 175	+ 211	213	+ 210	+ 253	33	− 23	− 8	213	− 7	+ 3
38	+ 199	+ 230	218	+ 187	+ 220	38	+ 1	− 13	218	+ 25	+ 19
43	+ 193	+ 244	223	+ 179	+ 190	43	− 69	− 46	223	+ 63	+ 10
48	+ 183	+ 231	228	+ 147	+ 155	48	− 30	− 29	228	+ 21	+ 35
53	+ 215	+ 205	233	+ 139	+ 105	53	+ 23	− 33	233	+ 27	+ 19
58	+ 198	+ 197	238	+ 76	+ 104	58	− 26	− 70	238	+ 54	+ 48
63	+ 210	+ 175	243	+ 75	+ 11	63	− 2	− 25	243	+ 15	+ 13

Digitized by Google

TABLE IV.—Results of Observations for Pivot-Error. Series I. (1902). Position I. Clamp West.
Calculated *minus* Observed (Unity = 0ʳ·001).

Micrometer Right (Horizontal Co-ordinates).

N.P.D.	Set I.	Set II.	Set III.*	Set IV.	Mean.*	Set XIII.	Set XIV.	Set XV.	Set XVI.	Mean.	N.P.D.	Set I.	Set II.	Set III.*	Set IV.	Mean.*	Set XIII.	Set XIV.	Set XV.	Set XVI.	Mean.
0°	+17	+15	[+ 17]	+13	+15	+11	+14	+16	+14	+14	180	+17	+10	[+ 13]	+17	+15	+16	+16	+17	+17·	+17
5	+15	+15	[+ 19]	+15	+15	+11	+15	+17	+15	+14·	185	+20	+12	[+ 18]	+19	+17	+16	+18	+18	+16	+17
10	+21	+19	[+ 25]	+18	+19	+19	+22	+15	+18	+18·	190	+25	+12	[+ 25]	+21	+19	+20	+14	+22	+22	+19·
15	+21	+24	[+ 29]	+14	+20	+21	+22	+21	+16	+20	195	+21	+16	[+ 27]	+24	+20	+21	+21	+23	+28	+23
20	+23	+22	[+ 33]	+18	+21	+18	+23	+24	+19	+21	200	+17	+10	[+ 24]	+20	+16	+14	+17	+19·	+20	+17·
25	+26	+26	[+ 35]	+24	+25	+23	+28	+29	+21	+25	205	+16	+11	[+ 30]	+20	+16	+14	+23	+20	+23	+20
30	+26	+23	[+ 39]	+24	+24	+24	+24	+33	+22	+26	210	+19	+ 7	[+ 27]	+20	+15	+15	+22	+24	+21	+20·
35	+28	+28	[+ 39]	+22	+26	+20	+21	+27	+17	+21	215	+22	+15	[+ 31]	+22	+20	+17	+26	+26	+27	+24
40	+25	+26	[+ 39]	+23	+25	+22	+22	+25	+21	+22·	220	+21	+15	[+ 29]	+21	+19	+18	+22	+22	+21·	+21
45	+27	+26	[+ 36]	+28	+27	+24	+26	+25	+24	+25	225	+19	+10	[+ 30]	+19	+16	+14	+18	+21	+18	+18
50	+26	+26	[+ 38]	+28	+27	+24	+21	+30	+19	+23·	230	+15	+12	[+ 28]	+15	+14	+12	+20	+14	+16	+15·
55	+22	+23	[+ 29]	+20	+22	+19	+15	+18	+21	+18	235	+13	+ 8	[+ 28]	+15	+12	+12	+16	+11	+13	+13
60	+18	+17	[+ 32]	+16	+17	+15	+14	+21	+17	+17	240	+10	+ 7	[+ 23]	+11	+ 9	+14	+16	+ 6	+ 9	+11
65	+17	+21	[+ 29]	+17	+18	+12	+ 9	+16	+13	+12·	245	+ 5	+ 3	[+ 16]	+ 5	+ 4	+12	+14·	+ 3·	+ 9	+10
70	+18	+13	[+ 23]	+14	+15	+ 8	+11	+17	+ 7·	+11	250	− 3	+ 2	[+ 10]	− 3	− 1	+ 4	+ 8	+ 3	+ 4	+ 5
75	+11	+11	[+ 17]	+ 7	+10	+12	+ 7	+10	0	+ 7	255	− 4	− 4	[+ 3]	− 2	− 3	+ 3	+ 6	− 5	+ 1	+ 1
80	+ 6	+ 6	[+ 15]	+ 3	+ 5	+ 4	− 3	+ 1	− 1	+ 0	260	− 5	− 4	[− 1]	− 2	− 4	− 1	+ 1	− 9	− 5	− 3·
85	0	− 2	[+ 1]	− 5	− 2	− 4	− 9	− 5	− 7	− 6	265	− 8	− 5	[− 5]	−11	− 8	− 9	− 2	−10	− 4	− 6
90	−16	−12	[− 19]	−16	−15	−16	−25	−17	−15	−18	270	−15	−21	[− 27]	−11	−16	− 8	− 7·	−17	−10	−10·
95	−23	−20	[− 23]	−23	−22	−24	−22	−26	−20	−23	275	−18	−16	[− 23]	−13	−16	−13	−12·	−17	− 8	−12·
100	−24	−23	[− 31]	−26	−24	−29	−31	−31	−28	−30	280	−19	−12	[− 29]	−15	−15	−12	−12·	−19	−12	−14
105	−25	−20	[− 28]	−22	−22	−28	−26	−32	−25·	−28	285	−18	−12	[− 27]	−16	−15	−15	−16	−21	−17	−17
110	−21	−21	[− 29]	−24	−22	−20	−28	−22	−21	−23	290	−21	−14	[− 23]	−13	−16	−15	−14	−21	−19	−17
115	−23	−18	[− 31]	−25	−22	−27	−27	−28	−24	−26·	295	−24	−20	[− 29]	−20	−21	−16	−14·	−27	−15	−18
120	−24	−23	[− 32]	−26	−24	−25	−26	−28	−26	−26	300	−22	−17	[− 28]	−21	−20	−11	−19	−22	−23	−19
125	−23	−22	[− 36]	−28	−24	−28	−30	−28	−30	−29	305	−22	−18	[− 27]	−18	−19	−18	−19	−22	−21	−20
130	−26	−24	[− 38]	−29	−26	−26	−31	−24	−22	−26	310	−22	−19	[− 28]	−18	−20	−19	−19	−22	−19	−20
135	−24	−23	[− 42]	−25	−24	−26	−32	−20	−24	−25·	315	−25	−17	[− 28]	−21	−21	−19	−24	−18	−17	−19·
140	−21	−21	[− 32]	−26	−23	−21	−24·	−17	−23	−21	320	−22	−13	[− 30]	−18	−18	−20	−19	−18	−17	−18·
145	−20	−18	[− 31]	−21	−20	−18	−21	−18	−24	−20	325	−17	−17	[− 30]	−16	−17	−14	−15	−13	−14	−14
150	−16	−17	[− 34]	−20	−18	−16	−19	−14	−19	−17	330	−11	−11	[− 24]	−11	−11	− 9	− 8	−12	− 5	− 8·
155	−11	− 8	[− 27]	−13	−11	−12	−13	− 9	−21·	−14	335	−10	− 9	[− 18]	− 9	− 9	− 5	− 6	−13	− 7	− 8
160	− 8	− 2	[− 17]	− 5	− 5	− 3	− 9	− 7	− 6	− 6	340	− 7	−10	[− 14]	− 4	− 7	− 2	− 3	− 4	− 5	− 3·
165	− 7	+ 2	[− 11]	− 2	− 2	+ 1	− 1	+ 3	0	+ 1	345	− 1	− 7	[− 8]	+ 2	− 2	− 6	+ 0·	− 1	− 1	− 2
170	+ 1	+ 5	[− 5]	+ 2	+ 3	+ 7	− 1	+ 3	+ 8	+ 4	350	+ 3	+ 3	[+ 1]	+ 3	+ 3	+ 1	+10	+ 2	+ 4	+ 4
175	+10	+12	[+ 4]	+ 8	+10	+12	+ 8	+ 6	+11	+ 9	355	+ 7	+ 5	[+ 7]	+ 4	+ 5	+ 6	+ 6·	+11	+ 4	+ 7

Micrometer Above (Vertical Co-ordinates).

0	+ 2	− 3	[+ 17]	+ 3	+ 1	− 1	+12	− 4	+ 7	+ 3·	180	+ 5	+ 1	[+ 23]	+ 4	+ 3	+ 1	+ 1·	+ 7	− 2	+ 2
5	+ 1	− 6	[+ 18]	+ 4	0	+ 4	+ 5	− 3	+ 3	+ 2	185	+ 9	− 1	[+ 25]	+ 7	+ 5	+ 1·	+ 1·	+ 7·	+ 3	+ 3·
10	− 5	− 8	[+ 16]	+ 1	− 4	0	0	+ 4	0	+ 1	190	+ 5	+ 2	[+ 22]	+ 7	+ 5	+ 2	0	+ 5	+ 3	+ 2·
15	− 2	− 6	[+ 15]	− 2	− 3	− 1	− 4	+ 2	+ 3	0	195	+ 2	− 2	[+ 18]	+ 2	+ 1	+ 4	+ 1	+ 4	− 3	+ 1·
20	− 2	− 1	[+ 16]	+ 1	− 1	+ 3·	+ 0·	+ 2·	+ 3	+ 2·	200	+ 1	− 2	[+ 17]	+ 3	+ 1	− 2	+ 2	+ 1·	− 1	0
25	+ 1	0	[+ 13]	− 3	− 1	+ 2	+ 2	+ 3	− 2	+ 1	205	+ 3	+ 1	[+ 10]	− 1	+ 1	+ 2	− 3	+ 1	− 1	0
30	− 1	− 6	[+ 9]	− 5	− 4	− 2	− 1	+ 1	+ 1	0	210	0	− 5	[+ 12]	− 2	− 2	+ 5	− 5	− 3	− 5	− 2
35	− 4	− 2	[+ 5]	− 5	− 4	− 1	+ 2·	− 0·	+ 2	+ 1	215	+ 6	+ 3	[+ 9]	− 1	+ 3	+ 5	− 7	− 2	− 4·	− 2
40	− 7	− 4	[+ 2]	− 2	− 4	+ 3	− 0·	− 2	0	0	220	+ 4	+ 4	[+ 9]	+ 2	+ 3	+ 4	− 5·	− 5	− 6	− 3
45	− 1	− 1	[+ 3]	0	− 1	+ 1	+ 7	0	0	+ 2	225	− 1	+ 2	[+ 3]	+ 1	+ 1	− 4	−10	− 1	− 5	− 5
50	0	+ 1	[+ 4]	0	0	+ 5	0	+ 4	− 3·	+ 1·	230	− 3	+ 3	0	− 3	− 1	0	−12	− 2	− 7	− 5
55	0	+ 6	0	+ 4	+ 3	+ 2	+ 3	0	− 2	+ 1	235	+ 5	+ 3	[− 5]	− 1	+ 2	+ 2	− 4	+ 1	0	0
60	− 2	+ 7	[− 6]	0	+ 2	+ 4	+ 3	− 3	− 1	+ 1	240	+ 6	+ 1	[− 3]	− 1	+ 2	+ 2	+ 5	− 1	+ 5	+ 3
65	0	+ 5	[− 7]	+ 2	+ 2	0	+ 3	0	0	+ 1	245	+ 2	+ 1	[− 11]	− 3	0	− 2	0	+ 3	+ 4	+ 1
70	+ 4	+ 5	[− 10]	− 1	+ 3	0	+ 2	− 3	− 2	− 1	250	− 5	+ 1	[− 13]	− 7	− 4	− 2	− 5	0	− 0·	− 2
75	+ 2	+ 8	[− 14]	+ 2	+ 4	+ 6	+ 5	0	− 2	+ 2	255	− 1	− 4	[− 14]	− 7	− 4	− 3·	− 8	+ 1	0	− 3
80	− 1	+ 3	[− 12]	+ 3	+ 2	+ 6·	+ 6	+ 1	+ 2·	+ 4	260	+ 1	− 1	[− 15]	− 4	− 1	− 6	− 3	− 2·	− 2	− 3·
85	+ 2	+ 9	[− 8]	+ 5	+ 5	+ 7	+ 9	+ 2	+ 4	+ 5·	265	− 3	+ 1	[− 17]	− 6	− 3	− 2	− 4	− 3	− 1·	− 3
90	+ 5	+ 9	[− 2]	+ 8	+ 7	+10	+12	+ 3	+ 6	+ 8	270	− 5	− 2	[− 19]	− 4	− 4	− 3	− 4	+ 2	0	− 1
95	+ 9	+12	[− 2]	+ 5	+ 9	+ 8·	+ 9	+ 3	+ 5	+ 6·	275	− 8	− 6	[− 19]	− 5	− 6	− 2	− 6	− 3·	− 5	− 4
100	+ 9	+ 8	[− 4]	+ 7	+ 8	+ 7	+ 6	+ 3	+ 7	+ 6	280	− 5	− 7	[− 24]	− 5	− 6	− 7	− 5	− 6	− 6	− 6
105	+11	+ 6	[− 3]	+ 5	+ 7	+ 4	+ 5	+ 2	+ 9	+ 5	285	−10	− 6	[− 22]	− 5	− 7	− 3	− 6	− 4	− 3	− 4
110	+ 4	+ 5	[− 6]	+ 1	+ 3	+ 2	0	+ 3	+ 2	+ 2	290	− 4	− 7	[− 21]	− 2	− 4	− 3	− 4	− 3	+ 2	− 2
115	+ 2	+ 4	[− 11]	0	+ 2	+ 1·	0	− 1	− 1	0	295	− 1	− 3	[− 15]	0	− 1	− 1	+ 3	− 2	+ 2·	+ 0·
120	0	+ 6	[− 7]	− 2	+ 1	+ 5	− 2·	+ 2	0	+ 1	300	− 1	− 1	[− 15]	− 5	− 2	− 2	0	− 4	0	− 1·
125	+ 2	+ 6	[− 6]	− 1	+ 2	− 1	+ 1	+ 5	+ 2	+ 2	305	− 6	− 3	[− 17]	− 3	− 4	0	+ 5	− 6	0	0
130	− 1	+ 3	[− 3]	− 3	0	+ 2·	− 3	+ 9	+ 6	+ 3·	310	− 1	− 4	[− 12]	+ 3	− 1	− 3	− 2	− 3·	+ 5	− 1
135	+ 1	0	[− 3]	0	0	− 2	0	+ 4	+ 5	+ 2	315	− 5	− 3	[− 11]	0	− 3	0	0	− 2	+ 4	+ 0·
140	− 5	− 2	[− 4]	− 3	− 3	− 8	− 7	+ 2	− 6·	− 5	320	− 3	− 6	[− 8]	− 3	− 4	0	− 1	− 6	+ 6	0
145	− 1	+ 4	0	0	+ 1	−10	− 3	+ 4	0	− 2	325	− 3	− 8	[− 2]	+ 4	− 2	0	+ 6	− 2	− 1	+ 1
150	+ 5	+ 5	[+ 7]	+ 1	+ 4	− 7	− 1	+ 3	+ 3	− 0·	330	− 1	− 9	[− 2]	+ 5	− 2	− 2	+ 6	− 4	+ 1	0
155	+ 3	+ 4	[+ 5]	− 2	+ 2	− 5	− 5	+ 5	− 2	− 2	335	− 2	− 2	[+ 5]	+ 6	+ 1	− 2	+10	− 2	+ 6	+ 3
160	− 3	+ 1	[+ 9]	− 2	− 1	− 3	−11·	− 1	− 9	− 6	340	+ 1	− 9	[+ 12]	+ 1	− 2	+ 4	+10	− 1	+ 2	+ 4
165	− 3	− 4	[+ 12]	− 5	− 4	− 8	− 6	− 6	−11	− 8	345	− 4	− 4	[+ 9]	+ 1	− 2	− 0·	− 2	+ 1	− 3	− 1
170	− 5	− 6	[+ 9]	− 2	− 4	− 9	− 8·	− 9	−11·	− 9·	350	− 4	+ 1	[+ 16]	+ 4	0	− 1	+ 4	0	+ 1	+ 1
175	+ 4	+ 3	[+ 9]	− 2	+ 2	− 7	− 1·	+ 2	− 7	− 3·	355	0	− 4	[+ 16]	+ 7	+ 1	+ 2	+ 4	+ 2	+ 2	+ 2·

* The whole of Set III. had to be rejected. It was found at the end of the set that the mounting of the brass cell of the glass plate on which the dot is cemented had apparently not been screwed tightly home, and had become somewhat unscrewed, the result probably of slight shocks or vibrations transmitted through the rock in course of excavations of the neighbouring collimator pits. The whole set gave the discordant results which are bracketed as rejected.

Digitized by Google

TABLE V.—Results of Observations of Pivot-Error. Series I. (1902). Position I. Clamp East.

Calculated *minus* Observed (Unity = 0ʳ·001).

Micrometer Right (*Horizontal Co-ordinates*).

N.P.D.	Set V.	Set VI.	Set VII.	Set VIII.	Means.	Set IX.	Set X.	Set XI.	Set XII.	Means.	N.P.D.	Set V.	Set VI.	Set VII.	Set VIII.	Means.	Set IX.	Set X.	Set XI.	Set XII.	Means
0°	+ 3	0	+ 3	− 1	+ 1	− 3	− 3	+ 7·	+ 5	+ 1·	180°	+16	+12	+16	+14	+14·	+19	+16	+19	+ 5·	+15
5	+ 5	+ 5	+ 9	+ 8	+ 7	+ 2	+ 7	+ 9·	+ 4	+ 5·	185	+14	+13	+24	+16	+17	+21·	+18	+18	+11	+17
10	+14	+11	+15	+16	+14	+ 9	+14	+11	+12	+11·	190	+19	+16	+18	+21	+18·	+21	+22	+16	+14	+18
15	+12	+10	+18	+13	+13	+13	+15	+14	+12	+13·	195	+24	+18	+20	+22	+21	+20	+26	+20	+16	+20·
20	+15	+11	+18	+18	+15·	+11	+16	+17	+16	+15	200	+27	+20	+26	+24	+24	+33	+25	+16	+16·	+22·
25	+22	+15	+23	+23	+21	+19	+20	+24	+25	+22	205	+25	+25	+28	+30	+27	+29	+30	+22	+21	+25·
30	+26	+23	+30	+32	+28	+22	+30	+27	+29	+27	210	+23	+19	+29	+35	+26·	+27	+31	+24	+21	+26·
35	+23	+20	+24	+25	+23	+21	+24	+23	+27	+24	215	+23	+21	+28	+24	+24	+27	+27	+15	+22	+23
40	+24	+22	+26	+28	+25	+21	+29	+28	+29	+27	220	+26	+21	+31	+30	+27	+26	+27	+15	+24	+23
45	+21	+19	+28	+23	+23	+21	+25	+24	+27	+24	225	+26	+21	+25	+29	+25	+24	+25	+12	+19	+20
50	+15	+18	+25	+22	+20	+15	+24	+20·	+22	+20	230	+20	+18	+22	+24	+21	+19	+19	+13·	+14	+16·
55	+18	+19	+20	+22	+20	+16	+22	+20	+24	+20·	235	+20	+18	+22	+23	+21	+16·	+19	+12	+15	+15·
60	+21	+23	+22	+26	+23	+19	+25	+24	+25·	+23	240	+17	+15	+20	+19	+18	+17	+13·	+13	+17	+15
65	+11	+17	+15	+15	+14·	+12	+18	+17	+18	+16	245	+15	+15	+11	+14	+14	+12·	+12	+10	+19	+13·
70	+10	+15	+ 9	+11	+11	+10	+12·	+15	+16	+13·	250	+10	+ 9	+ 9	+13	+10	+ 7	+ 2	+ 8	+13	+ 7·
75	+ 3	+ 5	+ 4	+ 5	+ 4	+ 1	+ 8	+ 8	+ 8	+ 6	255	+10	+ 9	+ 4	+ 9	+ 8	+ 2	+ 3	+ 4·	+12	+ 5·
80	− 4	+ 3	+ 2	− 2	0	− 2	0	+ 4	+ 3	+ 1	260	+ 6	+ 3	+ 2	+ 6	+ 4	+ 2	− 4	+ 2	+10	+ 2·
85	− 9	− 4	− 8	− 8	− 7	− 8	−12	− 7·	− 2·	− 7·	265	+ 1	− 1	− 3	+ 3	0	− 2	− 2	− 5	+ 4	− 1
90	−16	− 6	−14	−12	−12	− 9	−12	− 7·	− 1	− 7·	270	− 4	− 7	− 6	− 8	− 6	− 5·	−11	− 8	0	− 6
95	−16	−14	−18	−16	−16	−11	−10	−12	− 9	−10·	275	− 3	− 8	−10	− 6	− 7	− 8	−11	−10	− 6	− 9
100	−20	−15	−20	−27	−20·	−16	−19	−15	−12	−15·	280	− 9	− 7	−16	−11	−11	− 4	−13	− 8·	− 8·	− 8·
105	−23	−16	−25	−24	−22	−16·	−19	−18	−14·	−17	285	− 9	−10	−19	−17	−14	−15·	−13	−11	−12	−13
110	−31	−25	−25	−28	−27	−30	−25	−25	−21	−25	290	−10	−11	−20	−16	−14	−12	−13	−14	−13	−13
115	−30	−27	−27	−33	−29	−32·	−34	−24	−25	−29	295	−11	−16	−21	−16	−16	−16	−19	−20	−13·	−17
120	−27	−25	−29	−33	−28·	−29·	−27	−29	−30	−29	300	−17	−20	−26	−21	−21	−19	−21	−18·	−22	−20
125	−25	−25	−26	−30	−26·	−29	−31	−30	−30	−30	305	−12	−17	−25	−24	−19·	−18	−25·	−18·	−22	−21
130	−34	−27	−27	−28	−29	−28·	−31	−28	−28·	−29	310	−16	−22	−25	−20	−21	−20	−21	−22	−19	−20·
135	−26	−25	−28	−26	−26	−21	−25	−25	−29	−25	315	−15	−20	−26	−20	−20	−16	−20	−16·	−18	−17·
140	−29	−26	−23	−22	−25	−23	−17	−22	−25	−22	320	−14	−17	−23	−19	−18	−13	−18	−15	−18	−16
145	−27	−26	−22	−28	−26	−23	−29	−21	−21	−23·	325	−15	−19	−19	−18	−18	−17	−15·	−13·	−16	−15·
150	−26	−24	−20	−26	−24	−20	−24·	−20·	−24	−22	330	−15	−22	−21	−18	−19	−21·	−16	−15	−18	−17·
155	−19	−17	−14	−20	−17·	−15	−12	−12	−25	−16	335	−12	−18	−15	−14	−15	−10	−14·	−13	−16	−13·
160	−11	−11	− 8	−13	−11	− 3	− 7	− 5	−12	− 7	340	−10	−15	−11	−15	−13	−18	−19	−15	−16	−17
165	0	− 6	+ 4	+ 2	0	+ 6	+ 4	0	− 7	+ 1	345	−13	−15	−15	−20	−16	−21	−19	−13	−17·	−17
170	+ 1	+ 6	+ 8	+ 5	+ 5	+11	+ 8	+ 3	− 0·	+ 5·	350	− 7	−11	−13	− 9	−10	− 8	−13	− 9	−15	−11·
175	+ 8	+ 7	+14	+ 8	+ 9	+15	+12	+10	+ 4	+10	355	+ 2	− 6	− 3	− 3	− 2·	− 5	− 2	+ 2	−10	− 4

Micrometer Above (*Vertical Co-ordinates*).

0°	− 4	+ 2	+ 8	+10	+ 4	+14	+ 9	+ 4	+ 9	+ 9	180°	+11	0	+ 7	+ 4	+ 5·	0	+ 6	+ 4	0	+ 2·
5	−12	0	− 3	0	− 4	+ 9	+ 1	− 1	0	+ 2	185	+ 8	− 2	+ 5	+ 3	+ 3·	− 1	+ 5	+ 3	+ 2	+ 2
10	−13	− 4	− 3	− 5	− 6	+ 2	− 3	− 3	− 4	− 2	190	+ 9	+ 1	+ 7	− 4	+ 3	− 1	+ 4	+ 7	+ 5	+ 4
15	− 8	− 2	− 3	− 2	− 4	+ 3	0	− 2	+ 5	+ 1·	195	+ 7	0	+ 4	+ 2	+ 3	+ 1	+ 3	+ 6	+ 4	+ 3·
20	−12	− 2	− 5	− 5	− 6	− 1	− 5	− 2	0	− 2	200	+11	+ 3	+ 8	+ 6	+ 7	+ 2	+ 5	+ 4	+ 7	+ 4·
25	−15	− 8	− 6	− 6	− 9	− 7	− 6	− 3	0	− 4	205	+ 5	0	+ 4	0	+ 2	+ 3	+ 4	+ 2	+ 9	+ 4·
30	−14	− 3	− 5	− 6	− 7	− 6·	− 4	0	− 1	− 3	210	+ 3	+ 2	+ 3	− 1	+ 2	+ 2	+ 3	− 2	+ 5·	+ 2
35	− 9	− 2	− 3	− 1	− 4	− 3	− 2	+ 2	+ 5	+ 0·	215	+ 8	+ 3	+ 5	+ 2	+ 4·	0	+ 3·	+ 3	+ 6	+ 3
40	−11	+ 1	− 2	0	− 3	− 6	− 2	− 4	+ 2	− 2·	220	+ 5	+ 2	− 1	+ 1	+ 2	− 1	+ 3	+ 4	+ 8	+ 3·
45	−10	− 1	− 5	− 4	− 5	− 6	− 8	− 4	+ 3	− 4	225	+ 7	− 1	− 1	− 1	+ 1	− 3	− 3	+ 6	+ 3	+ 1
50	−11	+ 4	− 6	− 3	− 4	− 1	− 6	− 1	+ 3	− 1	230	+10	+ 5	+ 1	− 1	+ 4	0	0	+ 3	− 1	+ 0·
55	−14	− 4	− 7	− 6	− 8	− 4·	− 6	− 3	+ 1	− 3	235	+ 8	+ 3	+ 2	+ 1	+ 3·	− 2	− 3	+ 6	− 1	0
60	− 9	+ 3	− 5	− 8	− 5	− 8	− 5	− 5	+ 0·	− 4·	240	+11	+ 2	0	+ 1	+ 3·	+ 3	− 1·	+ 8	0	+ 2·
65	− 9	0	− 5	− 4	− 4·	−12	− 3	+ 3	+ 2	− 2·	245	+ 9	− 2	− 2	0	+ 1	+ 1·	− 1	+ 4	+ 1	+ 4·
70	+ 2	+ 1	0	+ 3	+ 1·	+ 1	0	+ 4	+10	+ 4	250	+ 8	+ 1	− 2	0	+ 2	0	+ 1	+ 2	− 1	+ 0·
75	+ 6	+11	+ 4	+ 8	+ 7	+ 7	+ 3	+11	+11	+ 8	255	+ 5	+ 1	− 2	− 1	+ 1	− 1·	− 1	− 0·	− 4	− 2
80	+ 8	+11	+ 6	+ 6	+ 8	+ 6	+ 6	+14	+ 8	+ 8·	260	+ 3	+ 3	− 1	− 5	0	+ 1	− 1	− 2	0	− 0·
85	+ 7	+ 7	+ 3	+ 5	+ 5·	+ 1·	+ 2	+ 9	+ 5	+ 4·	265	+ 7	+ 3	− 5	0	+ 1	0	− 4	− 5	− 1	− 2·
90	+ 5	+12	+ 1	+ 6	+ 6	+ 3	+ 5	+12	+ 6	+ 6·	270	− 2	+ 7	− 5	− 2	− 0·	0	− 4	− 3·	− 7	− 3·
95	+ 4	+ 6	− 1	+ 3	+ 3	− 4	+ 2	+ 7	+ 3	+ 2	275	− 1	+ 2	− 2	− 1	− 0·	+ 4	− 5	− 4·	− 6	− 3
100	+ 3	+ 7	0	0	+ 2·	− 5	− 1	+ 6	0	0	280	0	+ 3	− 2	+ 1	+ 0·	+ 4	0	− 3	− 3	− 0·
105	+ 5	+ 4	− 1	+ 2	+ 2·	− 4	+ 2	+ 3	+ 3	+ 1	285	− 3	− 4	− 5	− 1	− 3	+ 5	− 3	− 9	− 8	− 4
110	− 1	− 4	− 3	− 3	− 3	− 5	− 3	− 3	− 3·	− 3·	290	− 6	+ 2	− 4	− 1	− 2	+ 3	− 4	− 9·	−11	− 5·
115	0	− 5	− 6	− 7	− 4·	− 8	− 7	− 5	− 5	− 6	295	− 6	+ 3	+ 2	− 4	− 1	+ 1	+ 2·	− 8	− 6	− 2·
120	− 6	− 8	−10	− 9	− 8	− 8	− 9·	− 6	−11	− 8·	300	− 3	+ 1	+ 1	− 2	− 1	+ 3	0	− 7	− 7	− 3
125	0	− 7	− 9	− 5	− 5	−10	− 9·	− 1	− 8	− 7	305	+ 1	− 2	+ 6	+ 3	+ 2	+ 4	+ 7	− 3	− 1	+ 2
130	− 6	− 5	−10	−11	− 8	−11·	− 9	− 6	− 6	− 8	310	+ 4	+ 3	+ 6	+ 3	+ 4	+ 3	+ 5	− 3	− 5	0
135	− 6	− 5	− 7	− 5	− 6	− 9	− 4	− 8	− 6	− 7	315	− 2	− 1	0	− 2	− 1	+ 6	+ 3	− 8	− 3	− 0·
140	− 1	−11	− 7	− 4	− 6	− 6	− 3	− 7	− 7	− 6	320	− 1	0	+ 6	+ 2	+ 2	+ 8	+ 5	+ 3	+ 1	+ 4
145	− 6	−11	− 8	− 9	− 8·	− 9·	− 7	− 9	− 9·	− 9	325	− 1	0	+ 6	− 2	+ 1	+ 3	+ 1	− 1	− 4	0
150	− 8	− 9	− 8	− 7	− 8	− 2	− 8	−13	−11	− 8·	330	+ 1	+ 1	+ 8	+ 6	+ 4	+ 6	+ 7	− 1·	+ 2·	+ 3·
155	− 5	−10	− 7	− 3	− 6	− 4	− 7	− 6	−11	− 7	335	+ 2	+ 1	+ 8	+ 3	+ 3·	+ 4	+ 4	0	+ 2	+ 2·
160	0	− 6	− 6	+ 1	− 3	− 1	+ 2	+ 1	− 7	− 1	340	+ 6	+ 7	+10	+12	+ 9	+ 6·	+12	+11	+ 5	+ 8·
165	− 2	− 1	0	+ 3	0	0	+ 3	− 2	− 1	0	345	+ 7	+ 4	+ 7	+11	+ 7	+10	+10	+ 6	+ 6	+ 8
170	+ 3	− 6	+ 2	+ 1	0	− 2	+ 6	− 3·	+ 1	+ 0	350	+ 4	0	+14	+ 6	+ 6	+11	+ 6	+ 9	+ 9	+ 9
175	+ 8	− 4	+ 6	+ 4	+ 3·	+ 1	+ 4	+ 1	+ 2	+ 2	355	+ 2	+ 2	+ 7	+ 4	+ 4	+10	+ 7	+ 4	+ 2·	+ 6

Digitized by Google

The following are the separate values of the constants of the excentricity of the dot, derived in the reduction of the various sets. It will be seen from the general accordance in each set between these constants, as independently derived from the measures of the horizontal and vertical co-ordinates, that the results are very reliable. The mean values of a and b from "Micrometer Right" and "Micrometer Above" have been employed in deriving the residuals which are given in Tables II., III., IV., and V. From the great variety in the values of a and b employed, it is impossible that sensible systematic error can be produced in the final result by any periodic errors of the screw of the pivot-tester, especially as the principal terms of periodic error have been eliminated by employing, in every sub-set, bisections of the dot made on two micrometer webs $1\frac{1}{2}$ revolutions of the screw apart.

SERIES I. (1902).

Set.	Micrometer. Right.	Micrometer. Above.
	r	r
I.	a −0·0821	−0·0777
	b + ·0154	+ ·0195
II.	a +0·0456	+0·0509
	b − ·0436	− ·0359
III.	a −0·0418	−0·0387
	b + ·0646	+ ·0722
IV.	a −0·0353	−0·0364
	b + ·0073	+ ·0110
V.	a +0·0852	+0·0848
	b − ·0365	− ·0398
VI.	a −0·0317	−0·0352
	b + ·0394	+ ·0371
VII.	a −0·0031	−0·0055
	b + ·0648	+ ·0597
VIII.	a +0·0589	+0·0516
	b + ·0018	− ·0008
IX.	a −0·0285	−0·0347
	b − ·0736	− ·0812
X.	a −0·0217	−0·0236
	b + ·0055	+ ·0015
XI.	a +0·0092	+0·0092
	b − ·0008	+ ·0007
XII.	a +0·0638	+0·0615
	b + ·0012	+ ·0031
XIII.	a −0·0513	−0·0537
	b − ·0277	− ·0236
XIV.	a −0·0008	−0·0082
	b + ·0353	+ ·0406
XV.	a −0·0598	−0·0571
	b − ·0021	+ ·0022
XVI.	a +0·0131	+0·0089
	b − ·0293	− ·0273

SERIES II. (1904).

Set.	Micrometer. Right.	Micrometer. Above.
	r	r
I.	a −0·0648	−0·0689
	b − ·1049	− ·1043
II.	a +0·0977	+0·0992
	b + ·0424	+ ·0404
III.	a +0·0331	+0·0354
	b + ·0707	+ ·0693
IV.	a +0·0874	+0·0843
	b − ·0460	− ·0518

We have thus two completely independent series of determinations of pivot-error—the first made in 1902, the second in 1904. Each of these divides itself into two independent series—one made in the position Clamp East, the other in the position Clamp West. For computation of the definitive corrections we combine all these as follows:—

First, as regards the horizontal co-ordinates, *i.e.* those errors due to the pivots which affect the Azimuth of the instrument.

The pivots rest on the slightly rounded bearings $a\ b$, $b\ c$ (fig. 9), which are inclined exactly 90° to each other.

Let us suppose the telescope of the transit to be directed to the Zenith, also that both pivots are perfect cylinders of equal diameter and coincident axes, and that the dot o (fig. 9) is in the true axis of the eastern pivot, Clamp East, and that the optical centre of the object-glass in the western pivot is also in the axis of that pivot. If now a flat is filed or ground away at d from the otherwise perfect pivot, then o would be displaced to the south, which (since the dot is always observed from the western end of the axis) would be equivalent to saying that the readings of "Micrometer Head Right" when bisecting the dot become smaller than they would have been if the pivot had not a flat upon it.

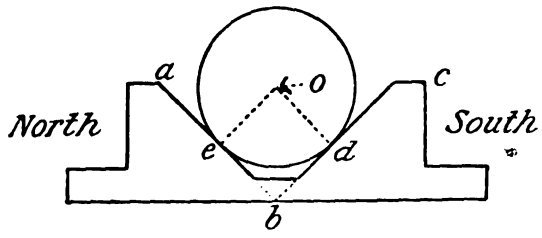

FIG. 9.

Suppose now that the instrument is reversed to Clamp West, and still directed to the Zenith, that the dot and pivot-object-glass have been exchanged in their pivots, and both the dot and the optical centre of the object-glass are in perfect coincidence with the original axes of the perfect pivots. We now have the pivots resting on precisely the same points of their cylindrical surfaces as before, but the flat at d will now rest on the northern slope of the western bearing instead of the southern slope of the eastern bearing—in other words, the centre of the flattened pivot will be displaced towards the north in consequence of the flat. But in the former case the flattened pivot carried the dot, and in the latter case it carried the object-glass,

Digitized by Google

therefore *the effect of pivot-error on the orientation of the axis of rotation will be the same both for Clamp East and Clamp West when the telescope is directed to the Zenith.*

It will be obvious, by similar reasoning, that *the effect of the pivot-error on the orientation of the axis will be the same for Clamp East as for equal opposite Zenith distances, Clamp West.*

For the case of the vertical co-ordinates. If we suppose, as before, a flat upon one of the two otherwise perfect pivots the effect will be, when the flat rests on one of the bearings, to lower the centre of that pivot. By similar reasoning we then find that *the effect of pivot-errors on the horizontality of the axis will be the same in amount, but of opposite sign, for Clamp East at Zenith Distance z and for Clamp West at Zenith Distance −z, and vice versa.*

The N.P.D. of the Cape Zenith is 123° 56′, and we shall suppose that the pivot-errors may be assumed the same at N.P.D. 123° 56′ as at N.P.D. 124°.

Interpolating all the results of the preceding tables to corresponding even degrees of Zenith Distance, giving equal weights to Series I. and II., and converting the micrometer readings into seconds of time by multiplying the screw-revolutions by 1·14, we obtain the following Table VI.

TABLE VI.—Combined Results for Pivot-Error. Clamp East and West. Position I.*

Horizontal Co-ordinates.

(Unity = 0ˢ·001.)

Z.D.	Corresponding N.P.D. of equal and opposite Z.D.		Clamp.		Δp. Mean.	Z.D.	Corresponding N.P.D. of equal and opposite Z.D.		Clamp.		Δp. Mean.
	East.	West.	East. Z.D. is −	West. Z.D. is +			East.	West.	East. Z.D. is +	West. Z.D. is −	
°	°	°				°	°	°			
0	124	124	− 33	− 31·	− 32	0	124	124	− 33	− 31·	− 32
5	129	119	− 33	− 28·	− 31	5	119	129	− 34·	− 30·	− 32·
10	134	114	− 28·	− 27	− 28	10	114	134	− 33	− 28	− 30·
15	139	109	− 26	− 24	− 25	15	109	139	− 30	− 26	− 28
20	144	104	− 24	− 29	− 26·	20	104	144	− 24	− 22	− 23
25	149	99	− 27	− 30·	− 29	25	99	149	− 23	− 21	− 22
30	154	94	− 19	− 24	− 21·	30	94	154	− 16	− 15	− 15·
35	159	89	− 11	− 14	− 12·	35	89	159	− 10	− 06·	− 08
40	164	84	− 01	− 04	− 02·	40	84	164	− 04	− 01	− 02·
45	169	79	+ 05	+ 05	+ 05	45	79	169	+ 02·	+ 04	+ 03
50	174	74	+ 10	+ 11	+ 10·	50	74	174	+ 09	+ 10·	+ 10
55	179	69	+ 16	+ 16	+ 16	55	69	179	+ 15	+ 18·	+ 17
60	184	64	+ 18	+ 19	+ 18·	60	64	184	+ 21	+ 21	+ 21
65	189	59	+ 21	+ 22	+ 21·	65	59	189	+ 28	+ 23·	+ 26
70	194	54	+ 23	+ 24	+ 23·	70	54	194	+ 23	+ 25·	+ 24
75	199	49	+ 26	+ 26	+ 26	75	49	199	+ 22	+ 20·	+ 21
80	204	44	+ 28·	+ 26·	+ 27·	80	44	204	+ 25	+ 21	+ 23
85	209	39	+ 29	+ 27	+ 28	85	39	209	+ 27	+ 21	+ 24
90	214	34	+ 27	+ 26	+ 26·	90	34	214	+ 26	+ 25·	+ 26
95	219	29	+ 28·	+ 27	+ 28	95	29	219	+ 30	+ 23	+ 26·
100	224	24	+ 28·	+ 25	+ 27	100	24	224	+ 23	+ 19·	+ 21
105	229	19	+ 24	+ 23·	+ 24	105	19	229	+ 17	+ 17	+ 17
110	234	14	+ 20·	+ 22·	+ 21·	110	14	234	+ 15	+ 14	+ 14
115	239	9	+ 20	+ 20	+ 20	115	9	239	+ 13·	+ 11	+ 12
120	244	4	+ 16·	+ 17	+ 17	120	4	244	+ 07	+ 06·	+ 07
125	249	359	+ 11	+ 14	+ 12·	125	359	249	+ 01	+ 02	+ 01·
130	254	354	+ 07	+ 07	+ 07	130	354	254	− 04	− 00·	− 02
135	259	349	+ 03	+ 03	+ 03	135	349	259	− 12	− 04·	− 08
140	264	344	− 01	00	− 00·	140	344	264	− 17	− 09	− 13
145	269	339	− 07	− 05	− 06	145	339	269	− 16·	− 14·	− 15·
150	274	334	− 09	− 09	− 09	150	334	274	− 14	− 15·	− 15
155	279	329	− 12	− 14	− 13	155	329	279	− 19	− 16	− 17·
160	284	324	− 15	− 18·	− 17	160	324	284	− 19·	− 18	− 19
165	289	319	− 18	− 22	− 20	165	319	289	− 21	− 18·	− 20
170	294	314	− 20	− 23·	− 22	170	314	294	− 23	− 22·	− 23
175	299	309	− 25	− 24	− 24·	175	309	299	− 27·	− 23·	− 25·
180	304	304	− 24·	− 22	− 23	180	304	304	− 24·	− 22	− 23

* The + sign of Δp in the Mean column of the above table signifies that the western end of the Mean Axis of rotation points north of west in consequence of pivot-error.

In Position I. the object-glass is at the end of the tube which is opposite 0° on the graduation of the fixed circle, and all the investigations of pivot-error have been made in, and referred to, this position. In Position II. the object-glass and eye-end are exchanged so that the object-glass is opposite 180° on the graduated circle. For Position II., therefore, Δp and Δp′ must be taken out with the argument z + 180°.

Digitized by Google

TABLE VI.—*continued.*

Vertical Co-ordinates.

(Unity = $0^s{\cdot}001$.)

Z.D.	Corresponding N.P.D. of equal and opposite Z.D.		Clamp.		$\Delta p'$.* Mean. $\frac{E.-W.}{2}$	Z.D.	Corresponding N.P.D. of equal and opposite Z.D.		Clamp.		$\Delta p'$.* Mean. $\frac{E.-W.}{2}$
	East.	West.	East. Z.D. is −	West. Z.D. is +			East.	West.	East. Z.D. is +	West. Z.D. is −	
°	°	°				°	°	°			
0	124	124	− 6	+ 4	− 5	0	124	124	− 6	+ 4	− 5
5	129	119	− 7·	+ 3	− 5	5	119	129	− 9	+ 3	− 6
10	134	114	− 5	+ 3	− 4	10	114	134	− 4	+ 1·	− 3
15	139	109	− 6	+ 5·	− 6	15	109	139	− 2	− 2·	0
20	144	104	− 9	+ 10	− 9·	20	104	144	+ 2	− 1·	+ 2
25	149	99	− 9·	+ 11	− 10	25	99	149	+ 1·	− 0·	+ 1
30	154	94	− 8	+ 11·	− 10	30	94	154	+ 3	− 3	+ 3
35	159	89	− 3	+ 7·	− 5	35	89	159	+ 8	− 6	+ 7
40	164	84	0	+ 3·	− 2	40	84	164	+ 6·	− 8·	+ 7·
45	169	79	+ 0·	+ 1	0	45	79	169	+ 9	− 8·	+ 9
50	174	74	+ 2·	− 0·	+ 1·	50	74	174	+ 8	− 2	+ 5
55	179	69	+ 3	− 0·	+ 2	55	69	179	+ 1	− 0·	+ 0·
60	184	64	+ 2·	+ 0·	+ 1	60	64	184	− 6·	+ 5·	− 6
65	189	59	+ 3	− 2·	+ 3	65	59	189	− 6	+ 3	− 4·
70	194	54	+ 2	+ 1·	0	70	54	194	− 7·	+ 4	− 6
75	199	49	+ 4	− 1	+ 2·	75	49	199	− 3	+ 2·	− 3
80	204	44	+ 2	− 3	+ 2·	80	44	204	− 5·	+ 1·	− 3·
85	209	39	− 1	− 2	+ 0·	85	39	209	− 3·	− 1·	− 1
90	214	34	+ 2	− 1	+ 1·	90	34	214	− 2·	0	− 1
95	219	29	+ 1·	− 0·	+ 1	95	29	219	− 7	+ 1	− 4
100	224	24	+ 0·	− 0·	+ 0·	100	24	224	− 7	+ 1	− 4
105	229	19	+ 2	− 2	+ 2	105	19	229	− 5	− 0·	− 3
110	234	14	+ 1	− 2·	+ 2	110	14	234	− 2·	+ 1·	− 2
115	239	9	+ 2·	− 1·	+ 2	115	9	239	− 3	+ 4·	− 4
120	244	4	− 2	+ 1·	− 2	120	4	244	0	+ 1	− 0·
125	249	359	+ 0·	+ 2	+ 1	125	359	249	+ 9	− 2	+ 5·
130	254	354	− 0·	+ 3·	− 2	130	354	254	+ 8·	− 4·	+ 6·
135	259	349	− 1	+ 3	− 2	135	349	259	+ 11	− 4	+ 7·
140	264	344	− 1	− 1	0	140	344	264	+ 12	− 4	+ 8
145	269	339	− 0·	+ 1·	− 1	145	339	269	+ 11·	− 5	+ 8
150	274	334	− 2·	+ 2·	− 2·	150	334	274	+ 4·	− 6	+ 5
155	279	329	− 1	− 0·	0	155	329	279	+ 5·	− 4·	+ 5
160	284	324	− 3	− 0·	− 1	160	324	284	+ 4	− 6	+ 5
165	289	319	− 5	− 1	− 2	165	319	289	+ 2	− 4·	+ 3
170	294	314	− 1	− 1	0	170	314	294	+ 0·	− 6	+ 3
175	299	309	− 0·	0	0	175	309	299	+ 2	− 2	+ 2
180	304	304	+ 1·	− 4	+ 3	180	304	304	+ 1·	− 4	+ 3

* $\Delta p'$ is entered in this column with the proper sign for Circle East. For Circle West the sign of $\Delta p'$ is reversed.
The + sign of $\Delta p'$ signifies that for Clamp East the western end of the Mean Axis of rotation is too low, and for Clamp West that it is too high, in consequence of pivot-error.

From the discordances between the separate results of Clamp East and Clamp West of Table VI. we derive the *probable error* of the determination of pivot-error at any N.P.D. to be :—

$$\left.\begin{array}{l}\text{From the Horizontal co-ordinates } \pm\ 0^s{\cdot}00147 \\ \text{,,\quad ,,\quad Vertical co-ordinates } \pm\ \cdot00153\end{array}\right\} = \pm\ 0''{\cdot}022.$$

As the distance between the pivots is 4 feet, the above probable error corresponds with a linear displacement of the dot amounting to $\pm$ 0·000005 inch, or about $\pm$ 0·00012 mm.

The question now arises whether, before computing the definitive corrections to clock time of transit, it may not be better to smooth the mean curve of pivot-error.

But if we examine the Azimuth curve, Clamp East, N.P.D. 29° to 59°, we find a marked irregularity : there is, of course, the same marked irregularity in the mean curve for Clamp West in equal and opposite Z.D.—viz. between N.P.D. 219° and 189° ; but the observations in all the series agree in supporting this feature of the mean curve. Again, in the Level curve, Clamp East, we have a marked irregularity in the mean curve at N.P.D. 64° to 99° and, of course, a corresponding equal and opposite irregularity in the mean curve at N.P.D. 184° to 149°, Clamp West ; yet

Digitized by Google

both are most strongly supported by the observations, and so on throughout the whole. There can therefore be no question as to the reality of these departures from a regular elliptical figure in the pivots, and it seems the most legitimate course to derive the correction to clock-time of transit rigorously from the actual pivot-errors determined at each 5° of Z.D., and then to interpolate them for each degree and for smaller intervals near the pole.

Before doing so it may be well to state clearly the origin of the signs of the results given in Table VI., because a very distinguished astronomer has written to me to say that he considers the errors of our pivots too large, and that it would be better, in order to avoid possible error in applying corrections for these errors, to have the pivots refigured.

I cannot agree with him—first, because it would involve too great loss of time to return the instrument; also because, if the pivots were reground, we should have to do all the work of determining their errors over again, and surely it is possible to make clear to the reader and to convince one's self that the basis upon which the signs of the corrections have been determined is correct.

It will be remembered that the fixed pivot-testing telescope is mounted on the western pier. In determining the horizontal co-ordinates the micrometer head of the telescope is to the right, *i.e.* to the south, and the readings of the head increase as the web approaches the head. Therefore increased readings of "Micrometer Right" signify either that the optical centre of the object-glass mounted in the western pivot has moved to the south or the dot in the eastern pivot has moved to the north. Therefore in Table I., "Micrometer Right," which gives the excess of the measured horizontal co-ordinate of the dot over the mean of the readings made at all N.P.D.'s, the sign + signifies that the Mean Axis of the western pivot has moved towards the south in consequence of pivot-error.

In Table II., Set 1, we have the residuals for "Micrometer Right," after elimination of the excentricity of the dot, and these residuals include both the errors of observations and the error of the pivots; but they are tabulated in the sense "Calculated *minus* Observed"—that is to say, the signs of Table II. have the opposite significance to those of Table I. In other words, in Table II., "Micrometer Right," the sign + signifies that the western end of the Mean Axis of rotation is north of west. The same is true of Tables III., IV., V., and VI.

For the vertical co-ordinates the observations have all been made with "Micrometer Head Above"; therefore, by similar reasoning, the + sign in Tables II., III., IV., V., and VI. signifies that the western end of the Mean Axis of rotation is too low.

To compute the corrections to clock-time of transit on account of pivot-error, therefore, if we take Δp and $\Delta p'$ from Table VI. we shall have, for Position I.:—

$$\Delta \mathrm{T} \sin \mathrm{N.P.D.} = \Delta p \sin z \begin{matrix} - \\ + \end{matrix} \begin{matrix} \Delta p' \cos z \text{ for Circle E.} \\ \Delta p' \cos z \text{ for Circle W.,} \end{matrix}$$

where $\Delta \mathrm{T}$ is the required correction to the clock-time of transit, and $\Delta p'$ is taken from the mean Column of Table VI.;
where z is the Zenith Distance, reckoned + from the Zenith to the North.

At Lower Transit the signs of Δp and $\Delta p'$ are reversed.

To compute the corrections to clock-time of transit for Position II., the values of Δp and $\Delta p'$ are to be taken from Table VI., with the Argument N.P.D. + 180°, because the telescope, which in Position I. would be directed to N.P.D. = π, would, whilst resting unmoved upon the bearings of the pivots, be pointed in the direction N.P.D. "π + 180°" by interchange of the object-glass and eye-end. In this way the definitive corrections given in Table VII., both for $\Delta \mathrm{T} \cos \delta$ and for $\Delta \mathrm{T}$, have been computed.

In practice the values of $\Delta \mathrm{T}$ have been interpolated for each degree to N.P.D. 170°, and rigorously computed from interpolated values of $\Delta \mathrm{T} \cos \delta$, for each 10′ of N.P.D. to 179°, and for every 5′ to 179° 20′, although given only for each degree in the accompanying Table VII.

It is of interest to remark in connection with this table how important such corrections are, and to note in the present instance how little is gained in systematic accuracy, so far as the effect of pivot-error is concerned, by use of the instrument in four positions. The thorough investigation of the effect of pivot-error appears to have hitherto been too much neglected.

The application of corrections for pivot-error with the aid of such a table presents no difficulty or uncertainty.

Digitized by Google

TABLE VII.—Definitive Corrections applicable to Clock-Time of Transit on Account of Errors of the Pivots.

N.P.D.	Position I.				Position II.			
	Clamp East.		Clamp West.		Clamp East.		Clamp West.	
	ΔT cos δ.	ΔT.	ΔT cos δ.	ΔT.	ΔT cos δ.	ΔT.	ΔT cos δ.	ΔT.
°	s	s	s	s	s	s	s	s
34	+ 0·026	+ 0·047	+ 0·026	+ 0·048	+ 0·027	+ 0·048	+ 0·026	+ 0·047
39	+ ·024	+ ·038	+ ·028	+ ·045	+ ·028	+ ·045	+ ·026	+ ·042
44	+ ·023	+ ·033	+ ·027	+ ·038	+ ·027	+ ·039	+ ·020	+ ·029
49	+ ·021	+ ·028	+ ·026	+ ·034	+ ·023	+ ·030	+ ·016	+ ·021
54	+ ·025	+ ·031	+ ·022	+ ·027	+ ·019	+ ·023	+ ·013	+ ·016
59	+ ·025	+ ·029	+ ·021	+ ·024	+ ·017	+ ·020	+ ·009	+ ·010
64	+ ·021	+ ·023	+ ·017	+ ·019	+ ·016	+ ·018	+ ·006	+ ·007
69	+ ·014	+ ·015	+ ·014	+ ·015	+ ·010	+ ·011	+ ·004	+ ·004
74	+ ·005	+ ·005	+ ·009	+ ·009	+ ·007	+ ·007	+ ·003	+ ·003
79	− ·004	− ·004	+ ·003	+ ·003	+ ·003	+ ·003	·000	·000
84	− ·007	− ·007	− ·003	− ·003	·000	− ·003	− ·002	− ·001
89	− ·010	− ·010	− ·011	− ·011	− ·003	− ·003	− ·002	− ·002
94	− ·010	− ·010	− ·019	− ·019	− ·002	− ·002	− ·003	− ·003
99	− ·010	− ·010	− ·021	− ·021	− ·005	− ·005	− ·003	− ·003
104	− ·009	− ·009	− ·018	− ·019	− ·005	− ·005	− ·002	− ·002
109	− ·007	− ·007	− ·012	− ·013	− ·003	− ·003	− ·002	− ·002
114	− ·002	− ·002	− ·009	− ·010	− ·004	− ·004	− ·001	− ·001
119	+ ·003	+ ·003	− ·008	− ·009	− ·002	− ·002	·000	·000
124	+ 0·005	+ 0·006	− 0·005	− 0·006	− 0·003	− 0·003	+ 0·003	+ 0·004
129	+ 0·008	+ 0·010	− 0·003	− 0·004	0·000	0·000	+ 0·002	+ 0·002
134	+ ·009	+ ·013	+ ·002	+ ·003	+ ·001	+ ·001	+ ·004	+ ·005
139	+ ·012	+ ·018	+ ·007	+ ·011	+ ·002	+ ·003	+ ·003	+ ·004
144	+ ·018	+ ·031	+ ·009	+ ·015	+ ·002	+ ·003	+ ·005	+ ·008
149	+ ·021	+ ·041	+ ·010	+ ·019	+ ·003	+ ·006	+ ·005	+ ·010
154	+ ·019	+ ·043	+ ·010	+ ·023	+ ·003	+ ·007	+ ·003	+ ·006
159	+ ·011	+ ·031	+ ·010	+ ·028	+ ·002	+ ·006	+ ·003	+ ·008
164	+ ·003	+ ·011	+ ·007	+ ·025	+ ·002	+ ·007	·000	·000
169	− ·003	− ·016	+ ·004	+ ·021	·000	·00	− ·003	− ·015
174	− ·009	− ·09	− ·005	− ·05	− ·003	− ·03	− ·007	− ·07
179	− ·014	− 0·80	− ·014	− ·80	− ·004	− ·24	− ·010	− ·57
S.P.								
4	+ 0·017	+ 0·24	+ 0·021	+ 0·30	+ 0·006	+ ·09	+ 0·016	+ 0·23
9	+ ·021	+ ·14	+ ·025	+ ·16	+ ·009	+ ·06	+ ·017	+ ·11
14	+ ·022	+ ·09	+ ·025	+ ·10	+ ·013	+ ·05	+ ·019	+ ·08
19	+ ·026	+ ·080	+ ·021	+ ·061	+ ·016	+ ·049	+ ·023	+ ·071
24	+ ·027	+ ·066	+ ·023	+ ·057	+ ·020	+ ·049	+ ·026	+ ·064
29	+ ·028	+ ·058	+ ·024	+ ·049	+ ·026	+ ·054	+ ·028	+ ·058
34	+ ·027	+ ·049	+ ·026	+ ·047	+ ·026	+ ·047	+ ·026	+ ·047

These figures do not include any correction for difference in the mean diameters of the two pivots. That correction affects only the determination of Collimation by reversion of the pivots and observation of the reflex image of the webs by reflection from a pool of mercury, provided that, as in practice at the Cape, no striding-level is used to determine the inclination of the axis.

THE DETERMINATION OF COLLIMATION.

Collimation may be determined in three different ways.

Method 1.—By adjusting the vertical web of one collimator to coincidence with the image of the vertical web of the other collimator, and then making readings for coincidence of the vertical movable web of the Transit Circle with the images of the vertical wires of both collimators without reversal of the Transit Circle.

In practice the webs of the collimators are double—one pair very close together, the other rather wider apart—so that coincidence can be effected by placing the closer pair of webs of one collimator between the image of the wires of the wider pair, and the single web of the Transit Circle between the images of the two webs of either pair.

Digitized by Google

A reversing prism is always employed, in two reversed directions of the images, in order to eliminate personality in making the bisections.

This method is certainly the simplest and probably the most accurate one of all when the collimators are contained in the same building as the Transit Circle; but when they are situated, as in the case of the Cape Circle, in separate buildings, it is seldom, except when the sky is overcast, that the images of the collimator webs are sufficiently steady for accurate observation.

I had anticipated this disadvantage when planning the observatory, but had either to accept it, or so largely to increase the size of the observatory as to make its cost, in its present form, prohibitive; and it seemed the more important alternative not to sacrifice the perfect equalisation of external and internal temperature which is attainable by the ventilated steel observatory.

By employing horizontal collimators directed east and west, with mirrors in front of their object-glasses inclined at an angle of 45° to their axes, so as to be mutually observable through the aperture in the axis (as has been done by Dr Harzer at Kiel), it would have been possible, by adding about 6 feet to the length and width of the observatory, to have mounted the collimators under the same roof with the Transit Circle; but the additional cost of the observatory would have been about £500, and that additional sum was not available at the time.

When the weather is cloudy there is generally little difficulty in employing the collimators, and as the instrument is reversed every Monday morning there is little fear of systematic error due to defective determination of Collimation.

Method 2.—By observing the collimators or marks in reversed positions of the instrument. An endeavour is made to determine Collimation in this way every Monday morning when the instrument is reversed, but in strong sunshine it is seldom that the images of the collimator webs or of the marks are well defined.

Method 3.—By observing the coincidence of the moveable web with its image in a pool of mercury in reversed positions of the instrument. This observation is made every Monday morning.

Method 1 is necessarily free from the effect of instrumental change that may be accidentally produced in process of reversal. In Method 2, change of Azimuth in reversal affects the Collimation-error derived from each collimator or mark taken separately, but does so in an opposite sense, so that the mean result from both marks is free from the effect of such change. Method 3 is affected accidentally by the possibility of a change of Level in the process of reversal, and is also systematically affected by any difference in the diameter of the two pivots. Indeed, Method 3 affords the only plan available for determining the difference of diameter of the pivots, as the instrument is not provided with a striding-level.

To investigate the effects of pivot-error on the determination of Collimation by Method 1, we have to remember that the head of the Right Ascension micrometer screw, both in Position I. and Position II., is at the end of the micrometer box next to the clamp, and that the readings of the head increase as the web approaches the head.

Suppose the instrument to be in Position I., Clamp East (*i.e.*, Micrometer-Head East).

Let the solid line N S denote the true direction of the north mark, and W and E the west and east ends of the Mean Axis of rotation of the Transit Circle, at right angles to N S.

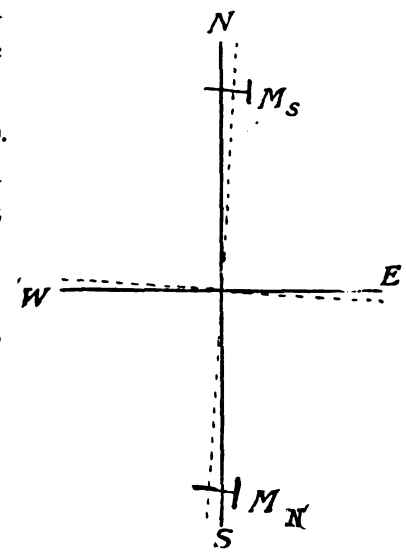

FIG. 10.

In our Table VI. the + sign of Δp indicates that, in consequence of pivot-errors, the western end of the mean axis of rotation will be shifted to the north of west. Let the dotted lines represent the position of the instrument as displaced by a pivot-error $= \Delta p$.

If the instrument is mounted Clamp East and reading upon the north mark, the micrometer-head will be towards the east—that is at M_N, and the web, which would have bisected the mark if there were no pivot-error, will have to be moved towards M_N in order to bisect it; that is to say, in consequence of the pivot-error in question, the micrometer-reading on the mark will be increased by a quantity that is the equivalent to Δp. The *correction* on account of pivot-error is therefore $-\frac{\Delta p}{V}$, where V is the value of one revolution of the micrometer screw, expressed in the same units as Δp.

Obviously, also, for readings on the south mark the correction will be $+\frac{\Delta p}{V}$, where Δp in both cases must be taken from Table VI., Position I., Clamp East, with the Arguments for N.P.D. 34° and 214° respectively.

Adopting the suffixes N.E., S.E., etc., to refer to readings on the north and south marks respectively, Clamp

Digitized by Google

East, and N.W. and S.W. to the same readings, Clamp West, we can derive the corrections applicable to any determinations of Collimation from horizontal marks or collimators as follows :—

$$R_{NE} = r_{NE} - \frac{\Delta p_{NE}}{V},$$

$$R_{SE} = r_{SE} + \frac{\Delta p_{SE}}{V},$$

$$R_{NW} = r_{NW} + \frac{\Delta p_{NW}}{V},$$

$$R_{SW} = r_{SW} - \frac{\Delta p_{SW}}{V},$$

where R is the micrometer reading corrected for the effects of pivot-error and screw-error, but neglecting any difference in the mean diameter of the pivots; and where r is the reading corrected for error of the screw, but not for pivot-error.

We have then the following corrections applicable to the mean of the readings on the north and south collimators by Method 1 :—

		Position I.	Position II.*
Clamp East.	$\text{Correction} = \frac{\Delta p_{SE} - \Delta p_{NE}}{2V}$	$+0^{r}\cdot000033$	$-0^{r}\cdot000033.$
Clamp West.	$\text{Correction} = \frac{\Delta p_{NW} - \Delta p_{SW}}{2V}$	$+0\cdot000033$	$-0\cdot000033.$

From Table VI. we find the corresponding values of Δp, viz. $\Delta p_{SE} = +26$, $\Delta p_{NE} = +26$, $\Delta p_{NW} = +26$ $\Delta p_{SW} = +26$; and we have already $V = 3^{s}\cdot783$, or, in the units of Δp, $= 3783$, and hence the values given above.

For Method 2, *i.e.* by reversal on both collimators or marks, we get in the mean

		Position I.	Position II.
	$\text{Correction} = \frac{\Delta p_{NW} - \Delta p_{NE} + \Delta p_{SE} - \Delta p_{SW}}{4V}$	$+0^{r}\cdot000033$	$-0^{r}\cdot000033.$

The corrections on account of pivot-error to the determination of the micrometer reading for geometric Collimation by Methods 1 and 2 are therefore insensible.

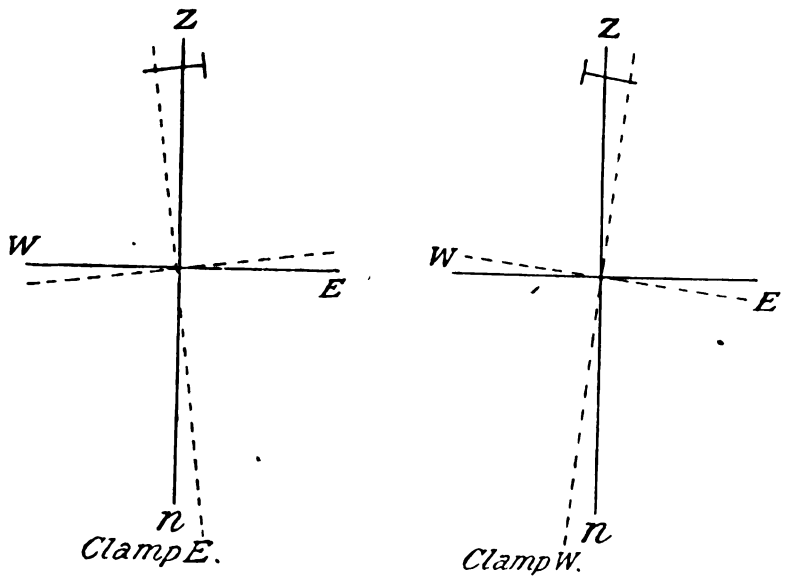

FIG. 11.

To derive the effect of pivot-error on the result when Collimation is determined by Method 3 :—

Let W (fig. 11) be the west, and E the east end of the Mean Axis of rotation of the Transit Circle, and let it be assumed truly horizontal. The vertical line Zn will then be its line of Collimation.

According to the definition of $\Delta p'$ in Table VI., the + sign, Clamp East, signifies that, as the result of pivot-error, the western end of the Mean Axis of rotation is too low. The dotted lines in fig. 11 will then represent the instrument as displaced by pivot-error in the positions Clamp E and Clamp W. This displacement will be equal and opposite in the two positions. Thus we see from the diagrams that the micrometer-readings, both Clamp E and Clamp W, would have to be increased by the equivalent of $\Delta p'$ in order to make the reflex and direct images of the moveable R.A. web to coincide. Both of the micrometer-readings would therefore, as the result of pivot-errors, require to be diminished.

The corrected readings will therefore be :—

$$R_{E} = r_{E} - \frac{\Delta p'}{V},$$

$$R_{W} = r_{W} - \frac{\Delta p'}{V},$$

* The reader may be reminded that in Position II. the object-glass and eye-ends are reversed. In Position I. the object-glass is opposite the circle-reading 0°, in Position II. opposite circle-reading 180° of the fixed circle. Therefore in Position II. the values of Δp are to be taken from Table VI. with the argument N.P.D. +180°.

Digitized by Google

and the true reading for geometric Collimation, unaffected by pivot errors, will be :—

$$\frac{R_W + R_E}{2} = \frac{r_W + r_E}{2} - \frac{\Delta p'}{V} = \frac{r_W + r_E}{Z} - 0^r{\cdot}008.*$$

Comparison of the Mean Diameters of the Two Pivots.

So far it has been assumed that the pivots are of equal mean diameter.

If ΔP is the change of Level produced by an excess of the mean diameter of the eastern over that of the western pivot, then in the preceding equation we may add ΔP to the expression for the reading of geometric Collimation with the same sign as that of $\Delta p'_E$, so that the expression for the true value of the Collimation reading determined by reversal over a pool of mercury becomes :—

$$\frac{R_W + R_E}{2} = \frac{r_W + r_E}{2} - \frac{\Delta p'_E}{V} - \frac{\Delta P}{V}.$$

But Collimation is determined by the collimators free from the effect of difference of diameter of pivots, so that if we denote the Collimation reading derived from observation of the collimators, after application of corrections for screw error and pivot error, by C_C, and Collimation by reflex observations corrected for Δp and screw errors, but not for $\frac{\Delta P}{V}$ by C_R, we get :—

$$C_C = C_R - \frac{\Delta P}{V} \text{ or } \frac{\Delta P}{V} = C_R - C_C.$$

During 1905 all the observations were made in Position II., and on twenty-three occasions Collimation was determined within a short period both by the collimators and by reflex observations in reversed positions of the instrument with the following results :—

Determination of the Micrometer Reading for Geometric Collimation.

1905.		By Collimators.	1905.		Reflex.	$C_R - C_C$
January	14	$19^r{\cdot}4803$	January	15	$19^r{\cdot}4818$	$+0^r{\cdot}0015$
	23	·4776		22	·4918	142
	27	·4867		22, 29	·4909	·42
February	2	·4840	January, February	29, 5	·4922	82
	6	·4830		5	·4943	113
	11	·4847		12	·4924	77
	18	·4914		19	·4939	25
	20	·4738		19	·4939	201
	21	·4837		19	·4939	102
	24	·4829	February	19, 26	·4939	110
March	4	·4880	March	5	·4951	71
	11	·4831		12	·4958	127
	13	·4850		12	·4958	108
April	28	·4943	April	24, 30	·4971	28
June	27	·4705	June	25	·4793	88
	30	·4705	July	25, 9	·4808	103
July	10	·4714		9	·4838	124
	12	·4751		9	·4838	87
October	3	·6550	October	3	·6708	158
	5	·6526		3, 8	·6706	180
	17	·6606		15	·6663	57
November	11	·6481	November	12	·6601	120
	14	·6479		12	·6601	+ 122

$$\frac{\Delta P}{V} = +0^r{\cdot}0099$$

With the probable error . $\pm$ ·0007

or $\Delta P = +0^s{\cdot}037$

With the probable error . $\pm 0^s{\cdot}0026$

* $\Delta p'$, both for Positions I. and II., is $= +0^s{\cdot}003$; and $V = 3^s{\cdot}783$.

Digitized by Google

Upon seventeen other occasions in 1905 the reading for geometric Collimation was determined on the same day both by the reflex method and by reversal on the marks with the following results :—

1905.		By Reversal on Marks.	Reflex.	Reflex *minus* Marks.
February	26	19r·4934	19r·4939	+0r·0005
April	9	·4888	·4939	51
	16	·4867	·4958	91
	24	·4851	·4962	111
	30	·4902	·4980	78
May	14	·4922	·5031	109
	21	·4913	·5002	89
	28	·4681	·4783	102
June	4	·4750	·4802	52
	18	·4699	·4814	115
	25	·4737	·4793	36
July	9	·4749	·4838	89
October	29	·6570	·6656	86
November	6	·6515	·6682	167
	19	·6534	·6655	121
December	10	·6589	·6628	39
	17	·6543	·6676	133

Mean = $\frac{\Delta P}{V}$ = +0r·0087

With the probable error . ± ·0007

In addition to the observations of the Azimuth marks above quoted, which were made for determination of Collimation, these marks are observed at the beginning and end of each night's work for the purpose of determining the variation of Azimuth of the instrument during the period covered by the observations.

If the reading for geometric Collimation is accurately known these observations give a measure of the angle between the marks, *i.e.* of the difference of Azimuth between that of the north mark and the Azimuth of the south mark +180°.

If there be an error = Δc in the adopted reading for geometric Collimation, there will result an error = $2\Delta c$ in the derived angle between the marks.

If the instrument is now reversed, and the marks are again observed, there will result an error = $-2\Delta c$ in the same determination.

Therefore, if the marks are invariable in position between the epochs of observation Clamp East and Clamp West, the angle between the marks will apparently vary by $4\Delta c$ from observations in the two positions, provided also that the Collimation reading of the Transit Circle itself does not vary in the interval.

The regular programme of observation provides for reversal of the instrument and for micrometer readings for coincidence of the moving R.A. web with its image reflected from a pool of mercury, both Clamp East and Clamp West, every Monday morning. From these readings we derive the "Reading for geometric Collimation $-\frac{\Delta P}{V}$." Adopting throughout a preliminary determined value of $\frac{\Delta P}{V} = -0^{r}\cdot0080$, the true reading for geometric Collimation was computed. The agreement of these results has shown that the Collimation changes very slowly, and nearly as a function of the temperature, and that its means on two successive Mondays might be regarded as applicable during the whole of the intervening week.

The angle between the marks, as might be expected from the precautions adopted in their installation, is remarkably constant; indeed, it is somewhat doubtful, even now, whether any real change in the relative positions of the marks has taken place, as will be seen from the following table, which gives the excess of the Azimuth of the south mark over that of the "north mark + 180°" reckoned from north through west.

Digitized by Google

Weekly Means of the Difference of Azimuth between the North and South Meridian Marks.

(Computed on the Assumption that $\Delta P = + 0^r{\cdot}0080$.)

POSITION II.

1905.	Clamp East.	No. of Sets.	1905.	Clamp West.	No. of Sets.	E − W.	Weight.	$\frac{E+W.}{2}$
November 6 to November 11	$+0^s{\cdot}212$	5	November 3 to November 6	$+0^s{\cdot}175$	7	$+0^s{\cdot}037$	2·9	$+0^s{\cdot}194$
„ 19 „ „ 25	·220	12	„ 13 „ „ 19	·181	8	·039	4·8	·201
December 4 „ December 10	·222	8	„ 27 „ December 2	·205	12	·017	4·8	·213
„ 17 „ „ 20	·231	5	December 10 „ December 17	·197	7	·034	2·9	·214

POSITION I.

1906.			1906.					
January 4 to January 13	$+0^s{\cdot}220$	12	January 18 to January 20	$+0^s{\cdot}228$	5	$-0^s{\cdot}008$	3·5	$+0^s{\cdot}224$
„ 22 „ „ 27	·207	9	„ 29 „ February 4	·243	5	·036	3·2	·225
February 4 „ February 9	·197	7	February 13 „ „ 17	·227	7	·030	3·5	·222
„ 19 „ „ 25	·205	9	„ 25 „ March 4	·252	9	·047	4·5	·228
March 4 „ March 11	·227	8	March 11 „ „ 24	·248	8	− ·021	4·0	·237
„ 29 „ April 1	·265	5	April 1 „ April 6	·244	6	+ ·031	2·7	·249
April 10 „ „ 16	·225	7	„ 16 „ „ 21	·224	10	·001	4·1	·225
„ 24 „ „ 29	·268	6	„ 29 „ May 6	·251	7	·017	3·2	·259
May 6 „ May 13	·240	8	May 13 „ „ 18	·234	9	·006	4·2	·237
„ 22 „ June 2	·239	10	June 12 „ June 17	·214	7	·025	4·1	·227
July 2 „ July 8	·255	6	„ 25 „ „ 27	·210	6	+ ·069	3·0	·231
„ 16 „ „ 22	·245	13	July 8 „ July 13	·246	7	− ·001	4·6	·245

E − W = + $0^s{\cdot}008$. Wt. 60.

Mean, having regard to weight with probable error ± ·005.

The probable error of an observation of weight 1 is ± ·040.

Thus :—

$$d\Delta P = \frac{\text{Clamp (E}-\text{W)}}{4} = + 0^s{\cdot}002 = + 0^r{\cdot}0008,$$

$$\text{or } \Delta P = + 0^r{\cdot}0088 = + 0^s{\cdot}033.$$

We have now the three following determinations of ΔP :—

		Probable Error.	Weight.
(1) From collimators and reflex observations, ΔP . .	$= + 0^s{\cdot}037$	$\pm 0^s{\cdot}0026$	1
(2) „ reversal on the marks and reflex observations, ΔP	$= +$ ·033	$\pm$ ·0026	1
(3) „ alternate weekly reversal on marks and Nadir, ΔP	$= +$ ·033	$\pm$ ·0013	4
Mean	$+ 0^s{\cdot}034$	$\pm 0^s{\cdot}001$	
or	$+ 0^r{\cdot}0090$	$\pm 0^r{\cdot}0004$.	

That is to say, the pivot next to the fixed circle is the larger in diameter by a quantity that requires the correction $-0^r{\cdot}0090$ to the micrometer reading for geometric Collimation when the latter is determined by reversal on the Nadir.

The close agreement of the values of the difference of Azimuth of the north and south mark, derived from the mean of the observations Clamp East and West, gives a striking proof of the stability of the relative Azimuths of the Meridian marks.

An adequate test of their *absolute* Azimuths can only be obtained on a full discussion of the observations of Circumpolar stars.

If we assume that the relative absolute Azimuths of the marks is constant throughout the observations of 1906, we obtain $\pm 0^s{\cdot}008$ as the probable error of each separate result in the right-hand column, on the hypothesis that all have equal weight.

In other words, if we assume that the observations of two successive weeks and of three sets of reversal on the Nadir are in the mean without error, the probable change in relative Azimuth of the marks comes out

$$\pm 0^s{\cdot}008\ ;$$

but certainly the greater part of this error must be attributed to errors of observation, for there appears to be no

Digitized by Google

evidence of secular change. There is some evidence of a small constant difference between the results for Position I. and Position II., but there is not a sufficient number of observations in Position II. to make this certain.

The probable error of the difference of Azimuth of the marks observed on a single night is $\pm 0^s{\cdot}040$,

which would correspond with

$$\pm 0^s{\cdot}020$$

for the probable error of a determination of Azimuth from the mean of both marks, on the assumption that the Azimuth of both marks is known.

On very few nights only are the marks so ill defined by irregular refraction that they cannot be observed. The most reliable observations can be made in high wind, for then, even if the images appear unsteady, the mean of a number of readings on such nights appears to give a reliable result.

But on perfectly calm nights, when sometimes the marks appear most sharply defined, the images have a slow motion in Azimuth—remaining sometimes for a number of seconds to east or west of their mean position.

Unless therefore the observer is careful to allow a considerable interval between his pointings, to make pointings at regular intervals, and to enter every observation which he makes whether it agrees with a previous observation or not, there is great liability to systematic error.

Whether this drawback would be obviated by enclosing the whole space between each mark and its lens with a tube sheltered as far as possible from sunshine and from sudden changes of temperature, is an experiment which should be tried.

Since the above was written, Mr Hough (now H.M. Astronomer) has kindly supplied me with the results of the separate determinations of the absolute Azimuths of the marks, which are tabulated as an Appendix to Part III. (see p. 115).

DETERMINATION OF THE DIVISION ERRORS OF THE CIRCLES.

The following account of the investigation of the division errors of the circles has been prepared at my request by Mr. S. S. Hough, Chief Assistant, under whose supervision the work was carried out in 1904, in great part during my absence in England.

§ 1. *Description of Circles, etc.*

The instrument is provided with two graduated circles, each of thirty inches in diameter. The graduation consists of short radial lines engraved on strips of polished metal inlaid in solid cast-iron discs. The circle on the clamp side of the instrument is rigidly attached to the axis, and is engraved on a hard alloy of platinum iridium; that on the other side is capable of rotation about the axis, so that the zero reading may be adjusted to any desired position of the instrument, and is divided on silver. The division marks on the latter or moveable circle appear to be somewhat more sharply defined than those on the fixed circle.

The spacing of the division marks on either circle corresponds with an angle of $5'$ of arc, and the lines are numbered at each degree from $0°$ to $359°$, the division marks at each whole, half, and quarter of a degree being distinguished by longer lines. The circles, as viewed from the face, are numbered in opposite directions, so that the readings of the two circles increase or diminish simultaneously.

Each circle is read by means of a low-power or pointer microscope to identify the division marks pointed on, together with six microscopes, provided with micrometers, equi-spaced round the circle, for the accurate subdivision of the spaces between these division marks. The micrometers mounted on the eastern pier are designated by the letters A, B, C, D, E, F, those on the western pier by the letters G, H, I, K, L, M. There are, in addition, four supplementary microscopes, a, b, c, d, which may be mounted on either pier for the purpose of investigating errors of graduation.

Five revolutions of the micrometer screw-heads correspond with the space between two successive division marks so that 1 rev. $= 1'$, and the drum-heads are divided into 100 parts, reading by estimation to $0'{\cdot}001$. The numbering of the screw-heads is in such a direction that the micrometer readings are additive to the pointer reading when the instrument is mounted with Clamp East, and subtractive when the instrument is mounted with Clamp West. The investigations relating to the errors of graduation were all made in the former position.

The positions of these microscopes with regard to the graduated circles when *in situ* are indicated by the following table :—

Digitized by Google

Table showing the Divisions under the several Microscopes.

Fixed Circle West (Clamp West).

Pointer.	G.	H.	I.	K.	L.	M.	*a*.	*c*.	*b*.	*d*.
30°	120°	300°	180°	0°	240°	60°	280°	100°	325°	145°
90	180	0	240	60	300	120	340	160	25	205
150	240	60	300	120	0	180	40	220	85	265
210	300	120	0	180	60	240	100	280	145	325
270	0	180	60	240	120	300	160	340	205	25
330	60	240	120	300	180	0	220	40	265	85

Fixed Circle East (Clamp East).

Pointer.	A.	B.	C.	D.	E.	F.	*a*.	*c*.	*b*.	*d*.
30°	300°	120°	240°	60°	180°	0°	100°	280°	145°	325°
90	0	180	300	120	240	60	160	340	205	25
150	60	240	0	180	300	120	220	40	265	85
210	120	300	60	240	0	180	280	100	325	145
270	180	0	120	300	60	240	340	160	25	205
330	240	60	180	0	120	300	40	220	85	265

Moveable Circle West (Clamp East).

Pointer.	G.	H.	I.	K.	L.	M.	*a*.	*c*.	*b*.	*d*.
30°	300°	120°	240°	60°	180°	0°	140°	320°	95°	275°
90	0	180	300	120	240	60	200	20	155	335
150	60	240	0	180	300	120	260	80	215	35
210	120	300	60	240	0	180	320	140	275	95
270	180	0	120	300	60	240	20	200	335	155
330	240	60	180	0	120	300	80	260	35	215

Moveable Circle East (Clamp West).

Pointer.	A.	B.	C.	D.	E.	F.	*a*.	*c*.	*b*.	*d*.
30°	120°	300°	180°	0°	240°	60°	320°	140°	275°	95°
90	180	0	240	60	300	120	20	200	335	155
150	240	60	300	120	0	180	80	260	35	215
210	300	120	0	180	60	240	140	320	95	275
270	0	180	60	240	120	300	200	20	155	335
330	60	240	120	300	180	0	260	80	215	35

§ 2. *Method of Grouping Observations.*

The operations for the determimation of the errors of graduation were divided into short sets, each set complete in itself, during which the positions of the microscopes may be assumed to remain unchanged. To guard against the possibility of change in the positions of the microscopes on account of change of temperature, etc., each set consisted of a series of pointings immediately followed by an exactly similar series, but in reversed order.

The plan adopted, together with a description of the methods of reduction, has been already described in *Monthly Notices*, vol. lxiv. Denoting the error of graduation of any division mark by D_x, the value of this quantity is derived in the form of a rapidly converging series,

$$D_x = X_x + A_x + B_x + C_x + \ldots,$$

where the quantities X_x, A_x, B_x, C_x, etc., which are derived by independent series of operations constituting separate sets, have the following significance :—

X_x denotes the error of division of the mark x (*i.e.* the amount by which the micrometer reading *exceeds* the value it would have if the graduation of the circle were perfect) in relation to the set of six symmetrically situated division marks in which it occurs, the mean division error of these six marks being regarded as zero.

A_x denotes the mean error of division of the six symmetrically distributed division marks containing the mark x in relation to three such sets forming eighteen symmetrically placed division marks. Thus A_x denotes a correction to the quantity X_x as primarily derived, to refer the latter to a set of eighteen instead of to a set of only six symmetrically distributed marks, the mean division error of the set of eighteen being regarded as zero.

In like manner B_x denotes the mean error of division of a set of eighteen division marks with respect to a symmetrically distributed set of seventy-two division marks in each of which the mark x occurs, the mean division error of the seventy-two marks being the adopted zero of reference.

And similarly C_x denotes the mean division error of a set of seventy-two symmetrically placed division marks containing the mark x with regard to five such sets, constituting a set of 360 symmetrically distributed division marks.

The primary microscopes A, B, C, D, E, F, on the east pier, and G, H, I, K, L, M, on the west, are used for the determination of the initial parts X_x of the graduation errors. The supplementary microscopes a, c are then used in conjunction with a single pair of the former, from which they are separated by an interval at 20°, for the evaluation of the corrections A_x; the corrections B_x are likewise determined by means of the supplementary pair of microscopes b, d together with a pair of primary microscopes situated at an interval of 25° from them.

Finally, for the determination of the quantities C_x, one of the pairs of subsidiary microscopes was removed

Digitized by Google

and replaced by a pair of microscopes provided with divided object-glasses, which enable one to view two division marks separated by an interval of 1° at each setting of the instrument.

The quantities A_x are by definition subject to the condition

$$A_x = A_{x+60^\circ} = A_{x+120^\circ} = A_{x+180^\circ} = A_{x+240^\circ} = A_{x+300^\circ},$$

since the same value applies to a set of six symmetrically placed division marks. Thus A_x, regarded as a function of x, is essentially a periodic function having six complete periods within the complete arc of the circle.

In like manner B_x is a periodic function having eighteen complete periods in the circle, and C_x is a periodic function having seventy-two complete periods within the complete circumference.

If we regard the division errors as a function of x, which, from the nature of its periodicity, may be expressed by a formula of the nature

$$D_x = a_1 \cos x + b_1 \sin x + a_2 \cos 2x + b_2 \sin 2x + \ldots,$$

then, in accordance with the above definitions:—

X_x denotes the aggregate of all the terms in this series, with the exception of those containing cosines or sines of multiples of $6x$;

A_x denotes the aggregate of the terms

$$a_6 \cos 6x + b_6 \sin 6x + a_{12} \cos 12x + b_{12} \sin 12x + \ldots,$$

viz. those involving cosines and sines of multiples of $6x$ which are not also multiples of $18x$;

$$B_x = a_{18} \cos 18x + b_{18} \sin 18x + a_{36} \cos 36x + b_{36} \sin 36x + \ldots,$$

in which are missing those terms involving cosines and sines of multiples of $72x$, while C_x denotes the aggregate of the terms

$$a_{72} \cos 72x + b_{72} \sin 72x + a_{144} \cos 144x + b_{144} \sin 144x + \ldots,$$

from which are excluded the terms involving sines and cosines of multiples of $360x$.

The remaining terms in the functional expression for the division errors might be determined by appropriate appliances; but it would appear from the analogy of those already investigated that they may safely be neglected as quite insensible.

§ 3. *Determination of the Principal Parts of the Division Errors.*

The microscopes having been first adjusted as accurately as possible so that

(1) five revolutions of the micrometer-screw are equivalent to the space between two successive division marks on the circle;

(2) the micrometers simultaneously read zero when pointed on six division marks symmetrically placed round the circle;

the readings of any micrometer will indicate the angular position of the circle from some arbitrary zero, affected, however, by errors arising from

(a) Inequalities in the spacing of the division marks;

(b) Inequalities in the spacing of the microscopes;

(c) Irregularities in the form of the pivots, including excentricity of the circle;

(d) Possible flexure of the circles themselves.

Ignoring for the moment the sources of error (c) and (d):—

Let x denote the amount by which a micrometer reads too large on account of errors of graduation, so that x is a quantity which remains constant so long as the same division mark is pointed on whatever microscope be used;

Let y denote the amount by which the micrometer reading is too large on account of inaccuracy in the spacing of the microscopes. The absolute zero of the quantities y referring to different microscopes may be chosen arbitrarily, but where this is assigned the differences between the y's will remain constant so long as the micrometers are undisturbed, *i.e.* they may be regarded as constant during a set of observations.

Let z denote a further quantity which defines the angular position of the graduated circle in its plane, and which would be directly measured by the micrometer readings if the sources of error (a) and (b) were absent. z is a quantity which is the same for all microscopes at a given setting of the circle. Then every micrometer reading may be regarded as leading to an equation of condition of the form

$$x + y + z = m,$$

where m denotes the reading of the micrometer head.

Digitized by Google

Consider now a set of observations taken as follows. The division marks 30°, 90°, 150°, 210°, 270°, 330° of the fixed circle were brought in succession under the pointer microscope, and the six microscopes, A, B, C, D, E, F, were read at each setting. The same operations were then immediately repeated in reversed order. The means of the readings from direct and reversed order of measurement were as follows (the fractional parts of a revolution alone being quoted) :—

TABLE I.

Date—October 12, 1903. Observer A.P.

Pointer. \ Microscope.	A.	C.	E.	B.	D.	F.
°	r	r	r	r	r	r
30	·179	·134	·214	·273	·265	·194
90	·127	·118	·178	·237	·260	·197
150	·152	·115	·210	·254	·244	·196
210	·168	·137	·177	·260	·257	·197
270	·140	·107	·165	·217	·271	·199
330	·143	·118	·191	·233	·209	·194

In this illustration the greatest range of screw called into play amounts in the case of microscope D to $0^r{\cdot}062$, and, with care in setting the circles, throughout the series of operations the length of screw actually employed in any one set but rarely amounts to $0^r{\cdot}100$. Through this range the error of the screws has been regarded as sensibly constant, so that no corrections have been applied on this account, while the screw equivalents adjusted over a range of 5 rev. have been taken as sensibly constant and given by 1 rev. = 1′·00.

The division marks under the several microscopes in the above observations may be derived from the table given above (§ 1). Collecting into the same vertical column the entries which correspond with the same division mark, the preceding table may be rearranged as follows :—

TABLE II.—Table of Micrometer Readings arranged according to the Division Mark pointed on.

Pointer. \ Division Mark.	300°.	240°.	180°.	120°.	60°.	0°.	Means
°	r	r	r	r	r	r	r
30	·179	·134	·214	·273	·265	·194	·2098
90	·118	·178	·237	·260	·197	·127	·1862
150	·210	·254	·244	·196	·152	·115	·1952
210	·260	·257	·197	·168	·137	·177	·1993
270	·271	·199	·140	·107	·165	·217	·1832
330	·194	·143	·118	·191	·233	·209	·1813
Means	·2053	·1942	·1917	·1992	·1915	·1732	·1925

Regarding each micrometer reading in this table as consisting of three parts, x, y, z, the entries now in the same vertical column will involve the same value of x, but different values of y and z. Hence, if we denote the mean value of y for the six microscopes by $\bar{y}$, and the mean value of z for the six settings of the circle by $\bar{z}$, and indicate the values of x applying to the different division marks by suffixes, we find on taking means of quantities in the same column :—

$$x_{300^\circ} + \bar{y} + \bar{z} = {}^r{\cdot}2053,$$
$$x_{240^\circ} + \bar{y} + \bar{z} = \cdot1942,$$
$$x_{180^\circ} + \bar{y} + \bar{z} = \cdot1917,$$
$$x_{120^\circ} + \bar{y} + \bar{z} = \cdot1992,$$
$$x_{60^\circ} + \bar{y} + \bar{z} = \cdot1915,$$
$$x_{0^\circ} + \bar{y} + \bar{z} = \cdot1732;$$

and on taking means we find

$$\bar{x} + \bar{y} + \bar{z} = {}^r{\cdot}1925,$$

where $\bar{x}$ denotes the mean of the six quantities x_{300°, x_{240°, etc. Subtracting this from each equation in turn we may eliminate $\bar{y}$ and $\bar{z}$ and derive

$$x_{300^\circ} - \bar{x} = +0^r{\cdot}0128,$$
$$x_{240^\circ} - \bar{x} = +\ \cdot0017,$$
$$x_{180^\circ} - \bar{x} = -\ \cdot0008,$$
$$x_{120^\circ} - \bar{x} = +\ \cdot0067,$$
$$x_{60^\circ} - \bar{x} = -\ \cdot0010,$$
$$x_{0^\circ} - \bar{x} = -\ \cdot0193.$$

Digitized by Google

The quantities thus derived represent the quantities denoted above $X_{300°}$, $X_{240°}$, etc., affected, however, by errors due to the causes (*c*), (*d*), *i.e.* irregularities of the pivots and flexure of the circles, as well as by the actual accidental errors of pointing.

In like manner, if we denote by $z_{I.}$, $z_{II.}$, etc., the values of z corresponding to the different settings of the instrument, we derive, by taking means of quantities in the same horizontal line :—

$$\left.\begin{aligned} \bar{x}+\bar{y}+z_{I.} &= 0^r\cdot2098 \\ \bar{x}+\bar{y}+z_{II.} &= \cdot1862 \\ \bar{x}+\bar{y}+z_{III.} &= \cdot1952 \\ \bar{x}+\bar{y}+z_{IV.} &= \cdot1993 \\ \bar{x}+\bar{y}+z_{V.} &= \cdot1832 \\ \bar{x}+\bar{y}+z_{VI.} &= \cdot1813 \end{aligned}\right\} \text{ whence } \left\{\begin{aligned} z_{I.}-\bar{z} &= +0^r\cdot0173, \\ z_{II.}-\bar{z} &= -\cdot0063, \\ z_{III.}-\bar{z} &= +\cdot0027, \\ z_{IV.}-\bar{z} &= +\cdot0068, \\ z_{V.}-\bar{z} &= -\cdot0093, \\ z_{VI.}-\bar{z} &= -\cdot0112\,; \end{aligned}\right.$$

and similarly, by taking means of the quantities in the same vertical columns of Table I., we find, on denoting by y_A, y_B, etc., the values of y appropriate to the separate microscopes :—

$$\left.\begin{aligned} \bar{x}+y_A+\bar{z} &= 0^r\cdot1515 \\ \bar{x}+y_C+\bar{z} &= \cdot1215 \\ \bar{x}+y_E+\bar{z} &= \cdot1892 \\ \bar{x}+y_B+\bar{z} &= \cdot2457 \\ \bar{x}+y_D+\bar{z} &= \cdot2510 \\ \bar{x}+y_F+\bar{z} &= \cdot1962 \end{aligned}\right\} \text{ whence } \left\{\begin{aligned} y_A-\bar{y} &= -0^r\cdot0410, \\ y_C-\bar{y} &= -\cdot0710, \\ y_E-\bar{y} &= -\cdot0033, \\ y_B-\bar{y} &= +\cdot0532, \\ y_D-\bar{y} &= +\cdot0585, \\ y_F-\bar{y} &= +\cdot0037. \end{aligned}\right.$$

§ 4. *Determination of the Weights and Probable Errors.*

From the above derived values we may obtain

$$x_{300°}+y_A+z_{I.}-\bar{x}-\bar{y}-\bar{z} = -0^r\cdot0109,$$

or, since

$$\bar{x}+\bar{y}+\bar{z} = +0^r\cdot1925,$$
$$x_{300°}+y_A+z_{I.} = +0^r\cdot1816.$$

In like manner quantities corresponding with each of the entries in Table II. may be computed. These quantities, arranged in tabular form in which the entries correspond with those in Table II., are as follows :—

Pointer. \ Division Mark.	300°.	240°.	180°.	120°.	60°.	0°.
30°	+ ·1816	·1405	·2057	·2697	·2673	·1942
90	·1280	·1846	·2386	·2514	·1889	·1259
150	·2047	·2501	·2529	·2056	·1532	·1049
210	·2653	·2595	·2022	·1650	·1273	·1767
270	·2545	1886	·1414	·1189	·1789	·2171
330	·1978	·1420	·1095	·1847	·2335	·2205

Comparing these with the entries in Table II., we derive the following table of residuals in the sense Observed – Computed :—

Table of Residuals (*Observed – Computed*).

Pointer. \ Division Mark.	300°.	240°.	180°.	120°.	60°.	0°.
	r	r	r	r	r	r
30°	−0·0026	−0·0065	+0·0083	+0·0033	−0·0023	−0·0002
90	− ·0100	− ·0066	− ·0016	+ ·0086	+ ·0081	+ ·0011
150	+ ·0053	+ ·0039	− ·0089	− ·0096	− ·0012	+ ·0101
210	− ·0053	− ·0025	− ·0052	+ ·0030	+ ·0097	+ ·0003
270	+ ·0165	+ ·0104	− ·0014	− ·0119	− ·0139	− ·0001
330	− ·0038	+ ·0010	+ ·0085	+ ·0063	− ·0005	− ·0115

The sum of the squares of these residuals referred to units of the fourth decimal place is

188078.

Now, each of the residuals depends on two pointings of a micrometer taken in direct and reversed order of measurement. The sum of their squares has been reduced to a minimum by the determination of nineteen unknowns in all,

Digitized by Google

viz.: six quantities $x-\bar{x}$, six quantities $y-\bar{y}$, and six quantities $z-\bar{z}$, and the quantity $\bar{x}+\bar{y}+\bar{z}$—of which, however, only sixteen are independent.

Hence, denoting the sum of the squares of the residuals by Σvv, since the weight of each residual is 2 if we regard the weight of a single micrometer pointing as unity, the square of the mean error corresponding to unit weight is given by

$$\epsilon^2 = \frac{2\,\Sigma vv}{36-16} = \tfrac{1}{10}\,\Sigma vv = 18808,$$

whence the derived value of the probable error of a single micrometer pointing is

$$r = \pm 0^{r}\cdot 0091 = \pm 0''\cdot 54.$$

These errors include parts due to the irregularities in the form of the pivots and flexure of the circles. Now, any displacement of the circle in its own plane produced by irregularities of the pivots will produce effects of like amount, but of opposite sign, on the readings of two microscopes placed at opposite ends of a diameter. If, therefore, we combine into a single observation the mean of the four readings taken at opposite extremities of a diameter, we shall obtain results freed entirely from errors due to the irregularities in the form of the pivots; but the separate determination of the division errors of the two marks pointed on will no longer be possible. The mean division error of two opposite division marks will, however, have the same value as before. In like manner the quantities y will not be completely separable, but will only be determinable in pairs.

Taking the means of the preceding results we find

$$\begin{aligned}
\tfrac{1}{2}(x_{300^\circ}+x_{120^\circ})-\bar{x} &= +0^{r}\cdot 0098, & \tfrac{1}{2}(y_A+y_B)-\bar{y} &= +0^{r}\cdot 0061,\\
\tfrac{1}{2}(x_{240^\circ}+x_{60^\circ})-\bar{x} &= +\ \cdot 0004, & \tfrac{1}{2}(y_C+y_D)-\bar{y} &= -\ \cdot 0063,\\
\tfrac{1}{2}(x_{180^\circ}+x_{0^\circ})-\bar{x} &= -\ \cdot 0101, & \tfrac{1}{2}(y_E+y_F)-\bar{y} &= +\ \cdot 0002,
\end{aligned}$$

while the values of z will remain as previously. We thus derive twelve unknown quantities, of which, however, only ten are independent.

The residuals, obtained from the combined observations consisting of four pointings, will be found by combining the previous residuals in pairs. They are given by the following table:—

Table of Residuals $(O-C)$, freed from Pivot-Errors.

Pointer. \ Division Marks.	300° and 120°.	240° and 60°.	180° and 0°.
	r	r	r
30°	+0·0004	−0·0044	+0·0041
90	− ·0007	+ ·0008	− ·0002
150	− ·0022	+ ·0014	+ ·0006
210	− ·0012	+ ·0036	− ·0024
270	+ ·0023	− ·0018	− ·0007
330	+ ·0013	+ ·0003	− ·0015

and the sum of their squares is 7787.

Since each residual depends on four pointings, and the observations have been brought into accord by the derivation of ten independent unknown quantities, the derived value of the square of the mean error of a single micrometer pointing, when freed from errors due to the form of the pivot, is

$$\epsilon^2 = \frac{4\,\Sigma vv}{18-10} = \tfrac{1}{2}\,\Sigma vv = 3894,$$

and the corresponding probable error

$$r = \pm 0^{r}\cdot 0041 = \pm 0''\cdot 25.$$

This value of the probable error still, however, includes parts of the errors due to flexure of the circles if such exist.

Now, any flexure of the circle in its own plane due to gravitational stress may be expected to be reversed in sign when the stress is reversed in direction. Thus the effect of flexure on the micrometer readings on any division

Digitized by Google

mark will be of like amount, but of opposite sign, if the mark be brought in succession under two microscopes at opposite extremities of a diameter.

If, therefore, we combine in a single observational equation the means derived from eight pointings taken on two opposite division marks under two opposite microscopes, we shall obtain nine equations of condition, from which the errors of flexure, as well as those due to irregularities in the forms of the pivots, have been entirely removed. The quantities x, y will be determinable as before; but the quantities z will only occur in the combinations $z_{\text{I.}}+z_{\text{IV.}}$, $z_{\text{II.}}+z_{\text{V.}}$, $z_{\text{III.}}+z_{\text{VI.}}$, and we thus have the means of deriving nine unknown quantities, of which seven are independent. Combining the original residuals in pairs, the new table of residuals, freed from the effects of errors of flexure, is as follows:—

Pointer. \ Division Marks.	300° and 120°.	240° and 60°.	180° and 0°.
	r	r	r
30° and 210°	−0·0004	−0·0004	+0·0009
90 and 270	+ ·0008	− ·0005	− ·0004
150 and 330	− ·0005	+ ·0009	− ·0005

The sum of the squares of these residuals is 349, and the derived value of the square of the mean error of a single pointing

$$\epsilon^2 = \frac{8\Sigma vv}{9-7} = 4\Sigma vv = 1396,$$

whence

$$r = \pm 0^{\text{r}}\cdot 0025 \quad = \pm 0''\cdot 15.$$

To derive the probable errors of the results, denote by n_{rs} the entry in Table II. in the rth row and s^{th} column; then we evidently have

$$x_{300^\circ} - \bar{x} = \frac{1}{6}\sum_r n_{r1} - \frac{1}{36}\sum_r\sum_s n_{rs},$$

$$= \frac{5}{36}\sum_r n_{r1} - \frac{1}{36}\sum_r n_{r2} - \frac{1}{36}\sum_r n_{r3} - \frac{1}{36}\sum_r n_{r4} - \frac{1}{36}\sum_r n_{r5} - \frac{1}{36}\sum_r n_{r6},$$

with similar expressions for the other quantities derived. Now, each n involves two pointings, and thus, if ϵ denotes the mean accidental error of a single pointing, the square of the mean accidental error of each n is $\frac{1}{2}\epsilon^2$. Thus, adding together the squares of the errors resulting from the different term in $x_{300^\circ} - \bar{x}$, since there are six with a coefficient $\frac{5}{36}$ and thirty with a coefficient $\frac{1}{36}$, the square of the mean accidental error of $x_{300^\circ} - \bar{x}$ is

$$6\left(\frac{5}{36}\right)^2\frac{\epsilon^2}{2} + 30\left(\frac{1}{36}\right)^2\frac{\epsilon^2}{2} = \frac{5}{72}\epsilon^2,$$

and the weight of the determination of $x_{300^\circ} - \bar{x}$ is $\frac{72}{5}$.

Again,

$$\tfrac{1}{2}(x_{300^\circ} + x_{120^\circ}) - \bar{x} = \frac{1}{12}\sum_r n_{r1} + \frac{1}{12}\sum_r n_{r4} - \frac{1}{36}\sum_r\sum_s n_{rs},$$

$$= \frac{1}{18}\sum_r n_{r1} + \frac{1}{18}\sum_r n_{r4} - \frac{1}{36}\sum_r n_{r2} - \frac{1}{36}\sum_r n_{r3} - \frac{1}{36}\sum_r n_{r5} - \frac{1}{36}\sum_r n_{r6}$$

the square of its mean error is therefore

$$\left\{12\left(\frac{1}{18}\right)^2 + 24\left(\frac{1}{36}\right)^2\right\}\frac{\epsilon^2}{2} = \frac{1}{36}\epsilon^2,$$

and the weight of its determination is 36.

The probable accidental error of the determination of each division error, adopting the value $r = \pm 0''\cdot 15$ for the accidental error of a single pointing, is $\pm 0''\cdot 040$; that for the mean of a pair of opposite division marks $\pm 0''\cdot 025$.

The operations illustrated above have been independently repeated by four other observers. For purposes of comparison we now append the results of the five such sets of operations.

Digitized by Google

Comparison of Results obtained by Different Observers.

Division Mark. / Observer.	300°	240°	180°	120°	60°	0°	r_0 I.	r_0 II.
	r	r	r	r	r	r	"	"
Hough	+ ·0118	+ ·0033	− ·0010	+ ·0075	− ·0013	− ·0200	± 0·20	± 0·20
Pett	·0132	·0010	·0030	·0100	·0002	·0213	± 0·27	± 0·12
Pead	·0128	·0017	·0008	·0067	·0010	·0193	± 0·25	± 0·15
Cheeseman . . .	·0143	·0010	·0022	·0050	·0008	·0170	± 0·18	± 0·17
Wilkin . . .	·0153	·0045	·0017	·0058	·0028	·0212	± 0·30	± 0·32
Mean.	+ ·0135	+ ·0023	− ·0017	+ ·0070	− ·0012	− ·0198		

The values of r_0 quoted are the derived values of the probable errors of a single micrometer pointing obtained from the internal agreement within the separate sets. The values I. include possible errors due to flexure; those II. are independent of flexure.

Another method of estimating the accuracy of the results is furnished by the discordances of the derived values of the same quantities by different observers. Regarding the observations of each observer as of equal weight, and comparing each result with the mean of all corresponding with it, remembering that a single result derived by one observer has weight $\frac{72}{5}$ compared with that of a single micrometer pointing, the probable accidental error of a single micrometer pointing from the agreement of each of the six results is found to be

$$\pm 0''{\cdot}20,\ \pm 0''{\cdot}23,\ \pm 0''{\cdot}14,\ \pm 0''{\cdot}29,\ \pm 0''{\cdot}14,\ \pm 0''{\cdot}27.$$

These results are in substantial agreement with those derived from the internal agreement within the sets.

Adopting $r_0 = \pm 0''{\cdot}20$ as a mean value, we derive $\pm 0''{\cdot}024$ as the probable accidental error of each division error determined as the result of the five sets of operations, and $\pm 0''{\cdot}015$ as the probable error of the mean division error for a pair of opposite division marks.

The division marks in sets of six, starting with 0°, 5°, 10°, etc., have each been subjected to a like treatment, while the intermediate division marks starting with 1°, 2°, 3°, 4°, etc., have been similarly operated on once only. From the sixty sets performed on the 5° division marks, we derive the following values for the probable error corresponding with unit weight:—

(*a*) from the internal agreement of the observations within the sets including errors due to flexure of the circle,

$$\pm 0''{\cdot}23;$$

(*b*) from the internal agreement of the observations within the sets, but excluding errors due to flexure of the circle,

$$\pm 0''{\cdot}20;$$

(*c*) from the agreement of results independently derived by different observers,

$$\pm 0''{\cdot}18.$$

The 5° division marks on the moveable circle have been investigated in like manner. The corresponding derived values in this case amount to

(*a*) $\pm 0''{\cdot}17$,
(*b*) $\pm 0''{\cdot}18$,
(*c*) $\pm 0''{\cdot}17$.

The satisfactory accordance between these values as derived from the internal agreement of the sets and the interagreement of derived results indicate that there is no significant source of systematic error which has been overlooked. The results, however, appear to indicate a sensible flexure of the fixed circle, but none of the moveable circle.

The principal parts of the division errors derived by these processes are contained in the following tables, the entries representing the mean errors of graduation for a pair of opposite division marks. The probable accidental error of determination for the marks at each exact 5° is $\pm 0''{\cdot}015$, and at the intermediate degrees in the case of the fixed circle, for which alone they have been investigated, $\pm 0''{\cdot}033$.

Digitized by Google

Table of Principal Parts of the Division Errors.

FIXED CIRCLE.

Argument—Division Mark under Microscope.

°	r	°	r	°	r	°	r	°	r	°	r
0	− 0·0108	30	+ 0·0055	60	+ 0·0005	90	− 0·0038	120	+ 0·0104	150	− 0·0018
1	128	31	64	61	20	91	− ·0031	121	113	151	31
2	123	32	70	62	86	92	− ·0009	122	38	152	65
3	103	33	28	63	79	93	+ ·0019	123	27	153	45
4	86	34	23	64	52	94	31	124	36	154	54
5	68	35	3	65	37	95	50	125	31	155	52
6	104	36	48	66	+ ·0047	96	44	126	60	156	90
7	74	37	42	67	− ·0035	97	73	127	114	157	111
8	56	38	41	68	68	98	85	128	121	158	130
9	75	39	39	69	16	99	86	129	88	159	132
10	71	40	54	70	− ·0040	100	82	130	111	160	134
11	93	41	84	71	+ ·0019	101	62	131	75	161	144
12	53	42	119	72	16	102	46	132	40	162	171
13	108	43	137	73	71	103	74	133	+ ·0044	163	204
14	− ·0015	44	134	74	56	104	14	134	− ·0044	164	149
15	+ ·0024	45	118	75	61	105	47	135	84	165	165
16	21	46	150	76	81	106	59	136	·0100	166	213
17	18	47	139	77	29	107	75	137	49	167	218
18	19	48	121	78	49	108	+ ·0053	138	67	168	168
19	9	49	123	79	21	109	− ·0014	139	29	169	115
20	10	50	119	80	52	110	+ ·0027	140	61	170	145
21	+ ·0020	51	123	81	43	111	24	141	63	171	140
22	− ·0015	52	110	82	59	112	76	142	45	172	180
23	+ ·0010	53	55	83	88	113	94	143	99	173	147
24	47	54	18	84	63	114	57	144	105	174	74
25	57	55	66	85	+ ·0015	115	54	145	71	175	119
26	19	56	62	86	− ·0010	116	59	146	10	176	115
27	33	57	42	87	11	117	62	147	28	177	106
28	44	58	+ ·0072	88	6	118	50	148	41	178	114
29	+ 0·0064	59	− 0·0009	89	− 0·0026	119	+ 0·0083	149	− 0·0039	179	− 0·0070

Table of Principal Parts of the Division Errors.

MOVEABLE CIRCLE.

Argument—Division Mark under Microscope.

°	r	°	r	°	r	°	r	°	r	°	r
0	− 0·0106	30	− 0·0038	60	− 0·0040	90	− 0·0051	120	+ 0·0146	150	+ 0·0090
5	56	35	+ 38	65	− 10	95	+ 05	125	64	155	− 42
10	35	40	− 44	70	− 39	100	+ 51	130	76	160	− 4
15	12	45	+ ·0107	75	+ 02	105	− 71	135	9	165	− 36
20	44	50	− 21	80	− 82	110	+ 44	140	125	170	− 24
25	− 0·0043	55	− 0·0152	85	− 0·0069	115	+ 0·0105	145	+ 0·0112	175	+ 0·0047

§ 5. *Determination of the Errors of Division Periodic within* 60°.

The parts of the division errors previously determined are exactly those parts which can be entirely eliminated by the use of six equi-spaced microscopes, and the determination is only of value in cases where incomplete readings are taken. Since, as a rule, the most effective method of dealing with these errors in practice is to read all six microscopes, it seemed useless to push their investigation further. Attention was accordingly next directed to the errors of division periodic within 60°. For this purpose the supplementary micrometers *a*, *c* were first used in conjunction with A, B for the fixed circle, and in conjunction with G, H for the moveable circle.

The *modus operandi* will be best illustrated by an example, as follows :—

The fixed circle was set to the pointer readings 110°, 130°, 150°, 290°, 310°, 330° in turn, and at each setting the four microscopes, *a*, *c*, A, B, were read. These operations were immediately repeated in reversed order. Such a series of operations constitutes a set.

Digitized by Google

The division marks under the microscopes read at the several settings are as follows :—

Microscope. / Pointer.	A.	B.	*a*.	*c*.
110°	20°	200°	180°	0°
130	40	220	200	20
150	60	240	220	40
290	200	20	0	180
310	220	40	20	200
330	240	60	40	220

and the means of the microscope readings were as below :—

Microscope. / Pointer.	A. and B.	*a* and *c*.	Diff.
	r	r	r
110°	·2203	·2728	·0525
130	·2283	·2903	·0620
150	·2218	·2763	·0545
290	·1853	·2468	·0615
310	·1823	·2428	·0605
330	·1805	·2448	·0643

The column marked "Diff." represents the mean excess of the readings of the microscopes a and c over those of the microscopes A and B, and is due in part to the graduation errors of the marks pointed on, and in part to the fact that the zero reading corresponding to the mean of the microscopes A and B does not exceed by 20° exactly the zero reading corresponding to the mean of the microscopes a and c.

If y_1 denote the amount, expressed in screw revolutions, by which the interval between the mean zero of the microscopes A and B and the mean zero of the microscopes a and c exceeds 20°, then—denoting by X_0, X_{20}, etc., the mean division errors of pairs of opposite division marks involving 0°, 20°, etc.—the above differences may be expressed by the following equations of condition :—

$$X_0 - X_{20} + y_1 = +0^r\cdot0525,$$
$$X_{20} - X_{40} + y_1 = +\ \cdot0620,$$
$$X_{40} - X_{60} + y_1 = +\ \cdot0545,$$

$$X_0 - X_{20} + y_1 = +0^r\cdot0615,$$
$$X_{20} - X_{40} + y_1 = +\ \cdot0605,$$
$$X_{40} - X_{60} + y_1 = +\ \cdot0643.$$

The absolute terms of these equations depend on the difference of two quantities, each resulting from the mean of four pointings, viz. two under each microscope in direct and reversed order of measurement. They will, therefore, be of weight 2 compared with that of a single micrometer pointing.

The first and fourth equations, second and fifth, and the third and sixth, resulting from corresponding readings taken in positions of the circle differing by 180°, may differ on account of flexure of the circle as well as on account of accidental errors of pointing. Taking means of these equations in pairs we, however, eliminate errors due to the flexure of the circle, and derive

$$X_0 - X_{20} + y_1 = +0^r\cdot0570,$$
$$X_{20} - X_{40} + y_1 = +\ \cdot0613,$$
$$X_{40} - X_{60} + y_1 = +\ \cdot0594,$$

in which each absolute term has the equivalent weight of four pointings.

Similar sets of operations were next performed on the division marks from 60° to 120°, and from 120° to 180°. Denoting by y_2 and y_3 the values corresponding to y_1 during these sets, which need not be assumed to have the same value as during the preceding set, the following equations of condition were derived :—

$$X_{60} - X_{80} + y_2 = +0^r\cdot0654,$$
$$X_{80} - X_{100} + y_2 = +\ \cdot0679,$$
$$X_{100} - X_{120} + y_2 = +\ \cdot0570,$$

$$X_{120} - X_{140} + y_3 = +\ \cdot0874,$$
$$X_{140} - X_{160} + y_3 = +\ \cdot0717,$$
$$X_{160} - X_{180} + y_3 = +\ \cdot0538.$$

Digitized by Google

Now, if we put

$$A_0 = \tfrac{1}{3}(X_0 + X_{60} + X_{120}),\ A_{20} = \tfrac{1}{3}(X_{20} + X_{80} + X_{140}),$$
$$A_{40} = \tfrac{1}{3}(X_{40} + X_{100} + X_{160}),$$

and

$$y = \tfrac{1}{3}(y_1 + y_2 + y_3),$$

so that A_x denotes the mean division error of six symmetrically placed division marks containing x, on taking means of corresponding equations in the three sets we derive

$$A_0 - A_{20} + y = +0^r{\cdot}0699,$$
$$A_{20} - A_{40} + y = +\ \ {\cdot}0670,$$
$$A_{40} - A_0 + y = +\ \ {\cdot}0567,$$

where each absolute term has weight 12.

These equations, involving four unknown quantities, do not admit of solution without the introduction of some further condition. The condition we propose to impose on them is that the mean of the three A's involved should be zero, *i.e.* that the mean of the division errors of all eighteen division marks involved should be regarded as zero. The quantities A_0, A_{20}, A_{40} will then denote the relative division errors of sets of six division marks with respect to sets of eighteen, the mean division error of the sets of eighteen being left for subsequent determination.

Denoting the absolute terms of the three equations symbolically by N_1, N_2, N_3, and introducing the condition,

$$A_0 + A_{20} + A_{40} = 0,$$

the solution of the equations may be expressed symbolically in the form,

$$A_0 = \tfrac{1}{3}(N_1 - N_3),\ A_{20} = \tfrac{1}{3}(N_2 - N_1),\ A_{40} = \tfrac{1}{3}(N_3 - N_2),$$
$$y = \tfrac{1}{3}(N_1 + N_2 + N_3),$$

or, numerically,

$$A_0 = +0^r{\cdot}0044,\ A_{20} = -0^r{\cdot}0010,\ A_{40} = -0^r{\cdot}0034,$$
$$y = +0^r{\cdot}0645.$$

From the symbolical form, since each quantity N has weight 12, the square of the mean error of each of the quantities A is

$$\frac{1}{9} \cdot \frac{2\epsilon^2}{12} = \frac{\epsilon^2}{54},$$

where ϵ denotes the mean error corresponding to unit weight. Thus, each A is derived with weight 54, *i.e.* adopting the value $0''{\cdot}20$ as the probable error of a single micrometer pointing, with a probable accidental error of $\pm\ 0''{\cdot}027$.

The quantities A_0, A_{20}, A_{40}, together with similar quantities applicable to the intermediate division marks starting with 5°, 10°, etc., have been independently investigated in the above manner by each of five different observers with the following results :—

	Hough.	Pett.	Pead.	Cheeseman.	Wilkin.	Mean.
	r	r	r	r	r	r
A_0	+ 0·0044	+ 0·0043	+ 0·0044	+ 0·0048	+ 0·0036	+ 0·0043
A_5	+ 30	+ 28	+ 24	+ 26	+ 28	+ 27
A_{10}	− 26	− 24	− 29	− 31	− 27	− 27
A_{15}	− 31	− 19	− 21	− 18	− 12	− 20
A_{20}	− 10	− 12	− 14	− 14	− 7	− 11
A_{25}	− 46	− 62	− 44	− 48	− 52	− 50
A_{30}	− 15	− 13	− 18	− 18	− 13	− 15
A_{35}	− 48	− 47	− 40	− 53	− 52	− 48
A_{40}	− 34	− 31	− 31	− 33	− 30	− 32
A_{45}	+ 16	+ 34	+ 21	+ 23	+ 24	+ 23
A_{50}	+ 41	+ 37	+ 48	+ 49	+ 40	+ 43
A_{55}	+ 79	+ 66	+ 61	+ 70	+ 63	+ 68

From the interagreement of the results derived by different observers each regarded as of weight 54, the probable error corresponding to unit weight is derived as $\pm\ 0''{\cdot}15$, indicating a highly satisfactory accordance between these results. The probable error of the mean of the five determinations is, on this basis, $\pm\ 0''{\cdot}009$, and, on the basis of the previously derived values for the probable error corresponding to unit weight, $\pm\ 0''{\cdot}011$.

The investigations of the quantities A were subsequently extended first to each exact degree and afterwards to every division mark of the fixed circle. For the moveable circle the exact degree division marks alone were operated on. Except in the cases quoted above, each set of observations was, as a rule, performed once only, yielding

Digitized by Google

results with a probable accidental error of $\pm 0''{\cdot}027$. An effective control was furnished by reducing separately the two halves of a set taken in positions of the circle differing by 180°. Though these two halves are liable to small discordances due to flexure of the circle, any abnormal discordance could be easily detected by this means, and the operations involving such discordance were repeated in case the cause of it could not be traced.

The results of these operations for every set of six division marks on the fixed circle and for every exact degree on the moveable circle are contained in the following tables:—

Tables of Principal Parts of Division Errors for the Mean of Six Divisions.

FIXED CIRCLE.

Argument—Division Marks under Microscope.

	0′.	5′.	10′.	15′.	20′.	25′.	30′.	35′.	40′.	45′.	50′.	55′
° ° ° ° ° °	r	r	r	r	r	r	r	r	r	r	r	r
0, 60, 120, 180, 240, 300	+0·0043	+0·0039	+0·0042	+0·0036	+0·0037	+0·0043	+0·0050	+0·0061	+0·0056	+0·0064	+0·0058	+0·0056
1, 61, 121, 181, 241, 301	·0044	61	39	55	41	62	46	51	55	51	57	42
2, 62, 122, 182, 242, 302	45	56	54	57	30	20	42	41	31	40	30	31
3, 63, 123, 183, 243, 303	20	41	42	32	28	24	24	25	28	28	39	28
4, 64, 124, 184, 244, 304	25	19	21	40	34	26	41	38	21	21	19	28
5, 65, 125, 185, 245, 305	27	28	27	31	+ 29	43	31	35	+ ·0017	23	34	42
6, 66, 126, 186, 246, 306	31	36	21	+ ·0020	00	3	+ ·0019	01	− ·0011	+ ·0001	02	+ ·0001
7, 67, 127, 187, 247, 307	00	+ ·0006	+ ·0010	− ·0004	− ·0008	+ ·0001	− ·0008	+ ·0005	+ ·0004	− ·0003	+ ·0008	00
8, 68, 128, 188, 248, 308	+ ·0002	− ·0017	− ·0005	+ ·0004	16	− ·0003	27	− ·0003	− ·0022	05	− ·0019	− ·0013
9, 69, 129, 189, 249, 309	− ·0003	10	16	− ·0011	06	7	13	04	13	12	24	15
10, 70, 130, 190, 250, 310	27	18	26	21	30	− ·0011	·0023	23	28	15	22	15
11, 71, 131, 191, 251, 311	25	34	24	28	− ·0001	+ ·0001	05	− 26	24	06	12	03
12, 72, 132, 192, 252, 312	20	17	14	13	+ ·0008	− ·0015	8	+ ·0012	04	17	05	19
13, 73, 133, 193, 253, 313	14	22	19	− ·0007	− ·0002	+ ·0006	2	− ·0013	15	15	01	14
14, 74, 134, 194, 254, 314	04	06	09	+ ·0010	05	− ·0011	25	19	15	18	12	15
15, 75, 135, 195, 255, 315	20	07	13	− ·0027	18	15	14	21	18	25	23	11
16, 76, 136, 196, 256, 316	21	32	00	16	05	03	16	22	17	11	24	21
17, 77, 137, 197, 257, 317	27	17	15	27	37	31	26	26	31	31	41	23
18, 78, 138, 198, 258, 318	36	35	27	40	41	34	35	14	41	22	38	41
19, 79, 139, 199, 259, 319	21	11	17	11	15	16	23	13	09	03	19	24
20, 80, 140, 200, 260, 320	11	26	14	21	06	22	15	28	31	39	22	32
21, 81, 141, 201, 261, 321	32	38	30	34	26	35	31	27	44	46	33	35
22, 82, 142, 202, 262, 322	40	46	45	45	37	37	45	37	30	47	43	35
23, 83, 143, 203, 263, 323	26	42	33	33	34	51	51	29	44	41	44	58
24, 84, 144, 204, 264, 324	37	56	51	62	64	57	63	64	67	74	46	55
25, 85, 145, 205, 265, 325	50	55	53	64	62	76	50	51	42	52	53	58
26, 86, 146, 206, 266, 326	49	50	37	36	27	44	35	30	27	43	41	42
27, 87, 147, 207, 267, 327	33	44	42	43	27	51	37	36	59	43	40	54
28, 88, 148, 208, 268, 328	45	41	44	54	36	46	28	43	21	33	27	36
29, 89, 149, 209, 269, 329	41	34	31	45	35	40	35	42	40	36	36	18
30, 90, 150, 210, 270, 330	15	19	26	20	17	14	10	14	11	12	15	28
31, 91, 151, 211, 271, 331	18	14	4	20	35	17	38	28	16	27	26	35
32, 92, 152, 212, 272, 332	15	5	10	16	27	22	13	39	17	22	29	36
33, 93, 153, 213, 273, 333	39	19	17	34	41	45	36	29	25	25	47	43
34, 94, 154, 214, 274, 334	50	52	54	61	57	62	44	61	64	54	56	44
35, 95, 155, 215, 275, 335	48	57	64	36	46	38	49	43	27	25	33	26
36, 96, 156, 216, 276, 336	26	27	42	26	45	50	44	29	31	42	34	33
37, 97, 157, 217, 277, 337	40	31	45	47	37	36	49	29	49	48	37	35
38, 98, 158, 218, 278, 338	24	37	29	21	26	31	15	42	33	52	41	41
39, 99, 159, 219, 279, 339	26	31	41	38	52	27	27	26	40	22	34	20
40, 100, 160, 220, 280, 340	32	13	28	15	31	21	35	33	25	25	36	24
41, 101, 161, 221, 281, 341	12	23	9	21	−0·0015	−0·0028	−0·0015	24	11	−0·0005	−0·0024	−0·0007
42, 102, 162, 222, 282, 342	−0·0005	−0·0010	9	−0·0012	+0·0007	+0·0017	+0·0003	−0·0004	−0·0001	+0·0007	+0·0013	+0·0004
43, 103, 163, 223, 283, 343	+0·0006	+0·0001	−0·0009	+0·0001	6	27	27	+0·0004	+0·0016	13	5	30
44, 104, 164, 224, 284, 344	12	37	+0·0030	22	30	31	22	26	46	53	27	27
45, 105, 165, 225, 285, 345	23	27	26	33	33	33	19	16	25	29	19	16
46, 106, 166, 226, 286, 346	18	14	16	15	27	41	16	29	38	42	39	41
47, 107, 167, 227, 287, 347	33	38	32	47	35	50	45	31	55	46	32	54
48, 108, 168, 228, 288, 348	43	58	49	50	52	49	55	46	43	38	46	49
49, 109, 169, 229, 289, 349	44	44	47	56	41	47	48	46	53	48	60	33
50, 110, 170, 230, 290, 350	43	37	52	41	47	25	33	37	39	27	37	43
51, 111, 171, 231, 291, 351	43	48	28	48	36	16	43	54	40	33	38	38
52, 112, 172, 232, 292, 352	35	22	24	29	19	37	21	27	21	39	34	55
53, 113, 173, 233, 293, 353	53	41	36	41	43	39	38	42	40	40	48	57
54, 114, 174, 234, 294, 354	54	58	63	51	62	73	69	80	79	72	68	59
55, 115, 175, 235, 295, 355	68	64	77	63	64	53	63	64	45	50	56	37
56, 116, 176, 236, 296, 356	47	59	42	42	50	53	60	51	48	53	58	54
57, 117, 177, 237, 297, 357	67	48	60	74	74	67	75	55	80	79	78	58
58, 118, 178, 238, 298, 358	60	72	56	61	67	65	50	56	74	74	79	82
59, 119, 179, 239, 299, 359	+0·0047	+0·0042	+0·0058	+0·0049	+0·0067	+0·0043	+0·0050	+0·0039	+0·0049	+0·0025	+0·0053	+0·0044

Digitized by Google

Table of Principal Parts of Division Errors for the Mean of Six Divisions.

MOVEABLE CIRCLE.

Argument—Division Marks under Microscope.

0°,	60°,	120°,	180°,	240°,	300°	r
0,	60,	120,	180,	240,	300	− 0·0038
1,	61,	121,	181,	241,	301	− 12
2,	62,	122,	182,	242,	302	+ 4
3,	63,	123,	183,	243,	303	+ 8
4,	64,	124,	184,	244,	304	− 1
5,	65,	125,	185,	245,	305	− 7
6,	66,	126,	186,	246,	306	0
7,	67,	127,	187,	247,	307	− 5
8,	68,	128,	188,	248,	308	+ 15
9,	69,	129,	189,	249,	309	+ 29
10,	70,	130,	190,	250,	310	+ 21
11,	71,	131,	191,	251,	311	+ 31
12,	72,	132,	192,	252,	312	− 3
13,	73,	133,	193,	253,	313	− 16
14,	74,	134,	194,	254,	314	+ 2
15,	75,	135,	195,	255,	315	+ 10
16,	76,	136,	196,	256,	316	+ 23
17,	77,	137,	197,	257,	317	+ 60
18,	78,	138,	198,	258,	318	+ 57
19,	79,	139,	199,	259,	319	+ 59
20,	80,	140,	200,	260,	320	+ 58
21,	81,	141,	201,	261,	321	+ 57
22,	82,	142,	202,	262,	322	+ 42
23,	83,	143,	203,	263,	323	+ 49
24,	84,	144,	204,	264,	324	− 15
25,	85,	145,	205,	265,	325	− 24
26,	86,	146,	206,	266,	326	− 5
27,	87,	147,	207,	267,	327	0
28,	88,	148,	208,	268,	328	+ 12
29,	89,	149,	209,	269,	329	+ 19

30°,	90°,	150°,	210°,	270°,	330°	r
30,	90,	150,	210,	270,	330	+ 0·0029
31,	91,	151,	211,	271,	331	+ 9
32,	92,	152,	212,	272,	332	+ 11
33,	93,	153,	213,	273,	333	+ 14
34,	94,	154,	214,	274,	334	+ 9
35,	95,	155,	215,	275,	335	+ 25
36,	96,	156,	216,	276,	336	+ 17
37,	97,	157,	217,	277,	337	− 2
38,	98,	158,	218,	278,	338	− 13
39,	99,	159,	219,	279,	339	− 29
40,	100,	160,	220,	280,	340	− 20
41,	101,	161,	221,	281,	341	− 45
42,	102,	162,	222,	282,	342	− 45
43,	103,	163,	223,	283,	343	− 57
44,	104,	164,	224,	284,	344	+ 16
45,	105,	165,	225,	285,	345	+ 31
46,	106,	166,	226,	286,	346	+ 5
47,	107,	167,	227,	287,	347	+ 5
48,	108,	168,	228,	288,	348	− 27
49,	109,	169,	229,	289,	349	− 48
50,	110,	170,	230,	290,	350	− 50
51,	111,	171,	231,	291,	351	− 40
52,	112,	172,	232,	292,	352	− 8
53,	113,	173,	233,	293,	353	+ 2
54,	114,	174,	234,	294,	354	− 11
55,	115,	175,	235,	295,	355	− 35
56,	116,	176,	236,	296,	356	− 40
57,	117,	177,	237,	297,	357	− 58
58,	118,	178,	238,	298,	358	− 44
59,	119,	179,	239,	299,	359	− 30

§ 6. *Determination of the Errors of Division Periodic within* 20°.

The outstanding parts of the division errors are those which affect in common eighteen symmetrically disposed division marks. Their principal parts may be determined by utilising the microscopes b, d, in conjunction with a pair of the primary microscopes. The microscopes used for the fixed circle were the microscopes A, B, and for the moveable circle the microscopes G, H. A set of operations consisted in reading each of the four microscopes with the pointer successively at the readings, x, $x+5°$, $x+10°$, $x+15°$, $x+180°$, $x+185°$, $x+190°$, $x+195°$, and immediately repeating the pointings in reversed order. Exactly as in the preceding series of operations, such a set starting with the division mark 0° under microscope A will lead to a set of equations of condition of the form :—

$$\begin{aligned} X_0 - X_{25} + y_1 &= n_1 , \\ X_5 - X_{30} + y_1 &= n_2 , \\ X_{10} - X_{35} + y_1 &= n_3 , \\ X_{15} - X_{40} + y_1 &= n_4 , \end{aligned}$$

where each absolute term is of weight 4.

By means of nine such sets, starting at intervals of 20° round the circle, we can obtain thirty-six equations of condition of the type :

$X_0 - X_{25} + y_1 = n_1$,	$X_5 - X_{30} + y_1 = n_2$,	$X_{10} - X_{35} + y_1 = n_3$,	$X_{15} - X_{40} + y_1 = n_4$,
$X_{20} - X_{45} + y_2 = n_5$,	$X_{25} - X_{50} + y_2 = n_6$,	$X_{30} - X_{55} + y_2 = n_7$,	$X_{35} - X_{60} + y_2 = n_8$,
$X_{40} - X_{65} + y_3 = n_9$,	$X_{45} - X_{70} + y_3 = n_{10}$,	$X_{50} - X_{75} + y_3 = n_{11}$,	$X_{55} - X_{80} + y_3 = n_{12}$,
etc.,	etc.,	etc.,	etc.,

where the equations resulting from a single set are now written in the same horizontal line.

Let us now introduce the notation,

$$\begin{aligned} \tfrac{1}{9}(X_0 + X_{20} + X_{40} + X_{60} + X_{80} + X_{100} + X_{120} + X_{140} + X_{160}) &= B_0 , \\ \tfrac{1}{9}(X_5 + X_{25} + X_{45} + \ldots\ldots\ldots + X_{165}) &= B_5 , \\ \tfrac{1}{9}(X_{10} + X_{30} + X_{50} + \ldots\ldots\ldots + X_{170}) &= B_{10} , \\ \tfrac{1}{9}(X_{15} + X_{35} + X_{55} + \ldots\ldots\ldots + X_{175}) &= B_{15} ; \\ Y = \tfrac{1}{9}(y_1 + y_2 + \ldots + y_9) ; & \end{aligned}$$

Digitized by Google

then, on taking the means of the equations written in the same vertical line, we find :—

$$\begin{aligned} B_0 - B_5 + Y &= N_1, \\ B_5 - B_{10} + Y &= N_2, \\ B_{10} - B_{15} + Y &= N_3, \\ B_{15} - B_0 + Y &= N_4, \end{aligned}$$

where each absolute term now has the equivalent weight of 36 micrometer pointings.
Supplementing these equations by the condition

$$B_0 + B_5 + B_{10} + B_{15} = 0,$$

so that the quantities B represent the mean division errors of sets of eighteen division marks with respect to sets of seventy-two, the mean division error of the seventy-two being regarded as zero, we derive the solution :—

$$\begin{aligned} Y &= \tfrac{1}{4}(N_1 + N_2 + N_3 + N_4), \\ B_0 &= \tfrac{1}{8}(3N_1 + N_2 - N_3 - 3N_4), \\ B_5 &= \tfrac{1}{8}(3N_2 + N_3 - N_4 - 3N_1), \\ B_{10} &= \tfrac{1}{8}(3N_3 + N_4 - N_1 - 3N_2), \\ B_{15} &= \tfrac{1}{8}(3N_4 + N_1 - N_2 - 3N_3). \end{aligned}$$

Since each N has weight 36, the square of the mean error of each B will be

$$\frac{\epsilon^2}{64}\left(\frac{9+1+1+9}{36}\right) = \frac{5\epsilon^2}{576},$$

and the corresponding weight will be $\frac{576}{5} = 115\frac{1}{5}$. Thus the probable error of each B derived from a single series of sets will be $\pm 0''{\cdot}019$.

Similar operations have been performed starting with division marks at intervals of half a degree for the fixed circle, and at intervals of a whole degree for the moveable circle, with the following results :—

Table of Relative Division Errors of Groups of Eighteen Divisions.

FIXED CIRCLE.

	r		r		r		r
$B_{0°}$	− 0·0001	$B_{5°}$	+ 0·0024	$B_{10°}$	− 0·0021	$B_{15°}$	− 0·0002
$B_{0°\,30'}$	+ 5	$B_{5°\,30'}$	+ 7	$B_{10°\,30'}$	− 14	$B_{15°\,30'}$	+ 2
$B_{1°}$	+ 4	$B_{6°}$	+ 1	$B_{11°}$	− 16	$B_{16°}$	+ 11
$B_{1°\,30'}$	+ 13	$B_{6°\,30'}$	+ 13	$B_{11°\,30'}$	− 18	$B_{16°\,30'}$	− 8
$B_{2°}$	+ 14	$B_{7°}$	+ 7	$B_{12°}$	− 17	$B_{17°}$	− 4
$B_{2°\,30'}$	+ 20	$B_{7°\,30'}$	− 14	$B_{12°\,30'}$	− 12	$B_{17°\,30'}$	+ 6
$B_{3°}$	+ 9	$B_{8°}$	− 14	$B_{13°}$	+ 1	$B_{18°}$	+ 4
$B_{3°\,30'}$	+ 22	$B_{8°\,30'}$	− 15	$B_{13°\,30'}$	− 3	$B_{18°\,30'}$	− 4
$B_{4°}$	+ 19	$B_{9°}$	− 17	$B_{14°}$	− 3	$B_{19°}$	+ 1
$B_{4°\,30'}$	+ 0·0024	$B_{9°\,30'}$	− 0·0023	$B_{14°\,30'}$	− 0·0005	$B_{19°\,30'}$	+ 0·0004

MOVEABLE CIRCLE.

	r		r		r		r
B_0	− 0·0035	B_5	+ 0·0050	B_{10}	− 0·0002	B_{15}	− 0·0013
B_1	− 24	B_6	+ 36	B_{11}	− 6	B_{16}	− 6
B_2	− 33	B_7	+ 43	B_{12}	+ 1	B_{17}	− 11
B_3	− 23	B_8	+ 31	B_{13}	+ 6	B_{18}	− 14
B_4	+ 0·0019	B_9	+ 0·0009	B_{14}	− 0·0005	B_{19}	− 0·0023

§ 7. *Interpolation of Results for Intermediate Divisions.*

For the complete determination of the errors of division periodic within 20° it would be necessary for us to bring every division mark under the subsidiary microscopes *b*, *d*, and determine the values of B for every set of eighteen division marks starting at intervals of 5′ round the circle. The following considerations, however, render this excessive labour unnecessary :—

Digitized by Google

The analytical expression for B regarded as a function of x is

$$B = a_{18}\cos 18x + b_{18}\sin 18x + a_{36}\cos 36x + b_{36}\sin 36x + \ldots\ldots,$$

involving sines and cosines of multiples of $18x$, but excluding those which are also multiples of $72x$ in virtue of the conditions

$$B_0 + B_5 + B_{10} + B_{15} = 0, \text{ etc.},$$

which have been imposed on the B's in order to render the solution of the equations from which the B's are derived determinate.

Consider now the set of operations on the division marks x, $x+5^\circ$, $x+10^\circ$, etc.

Using notation similar to that of the last section we find

$$\begin{aligned}
a_{18}\cos 18x + b_{18}\sin 18x + a_{36}\cos 36x + b_{36}\sin 36x + \ldots\ldots &= B_x = \tfrac{1}{8}(3N_1 + N_2 - N_3 - 3N_4),\\
-a_{18}\sin 18x + b_{18}\cos 18x - a_{36}\cos 36x - b_{36}\sin 36x + \ldots\ldots &= B_{x+5^\circ} = \tfrac{1}{8}(3N_2 + N_3 - N_4 - 3N_1),\\
-a_{18}\cos 18x - b_{18}\sin 18x + a_{36}\cos 36x + b_{36}\sin 36x + \ldots\ldots &= B_{x+10^\circ} = \tfrac{1}{8}(3N_3 + N_4 - N_1 - 3N_2),\\
a_{18}\sin 18x - b_{18}\cos 18x - a_{36}\cos 36x - b_{36}\sin 36x + \ldots\ldots &= B_{x+15^\circ} = \tfrac{1}{8}(3N_4 + N_1 - N_2 - 3N_3).
\end{aligned}$$

whence, from this series of operations alone, we derive

$$\begin{aligned}
a_{18} &= \tfrac{1}{4}(N_1 + N_2 - N_3 - N_4)\cos 18x - \tfrac{1}{4}(N_2 + N_3 - N_1 - N_4)\sin 18x,\\
b_{18} &= \tfrac{1}{4}(N_1 + N_2 - N_3 - N_4)\sin 18x + \tfrac{1}{4}(N_2 + N_3 - N_1 - N_4)\cos 18x,
\end{aligned}$$

and

$$a_{36}\cos 36x + b_{36}\sin 36x = \tfrac{1}{8}(N_1 - N_2 + N_3 - N_4),$$

the quantities a_{36}, b_{36} not being separately determinable from such a series. Since each quantity N is independently derived with weight 36, the weights of the expressions for a_{18}, b_{18}, and $a_{36}\cos 36x + b_{36}\sin 36x$ are easily found to be 144, 144, and 576 respectively.

Operating in this manner on the different groups of division marks starting with $x = 0^\circ$, $0^\circ\ 30'$, 1°, $1^\circ\ 30'$, etc., we derive the following table of values for the quantities a_{18}, b_{18}, $a_{36}\cos 36x + b_{36}\sin 36x$:—

Initial Division x.	a_{18}.	b_{18}.	$a_{36}\cos 36x + b_{36}\sin 36x$.
° ′	r	r	r
0 0	+ 0·0010	+ 0·0013	− 0·0011
0 30	+ 9	+ 6	− 4
1 0	+ 12	− 2	− 6
1 30	+ 8	+ 16	− 3
2 0	+ 5	+ 15	0
2 30	+ 17	+ 3	+ 4
3 0	+ 10	− 1	+ 5
3 30	+ 11	+ 9	+ 10
4 0	+ 13	+ 8	+ 8
4 30	+ 16	+ 13	+ 10

Analysing the quantities in the last column, and taking the means of the derived values of a_{18}, b_{18}, we find as the most probable values from all the observations :—

$$\begin{aligned}
a_{18} &= +0^{r}\cdot 00111 && \text{weight } 1440,\\
b_{18} &= +0\cdot 00080 && \text{,, ,,}\\
a_{36} &= -0\cdot 00092 && \text{,, } 2880\\
b_{36} &= +0\cdot 00036 && \text{,, ,,}
\end{aligned}$$

Comparing the mean values of a_{18}, b_{18} with the separate values quoted above, we derive as the probable accidental discordance of one of these quantities from the mean—

(a) from a_{18}'s . . . . . $\pm 0^{r}\cdot 00024$,
(b) from b_{18}'s . . . . . $\pm 0\cdot 00043$,
(c) from combination of both . . $\pm 0\cdot 00035$;

and, in like manner, from the residuals obtained by computing the values of $a_{36}\cos 36x + b_{36}\sin 36x$, and comparing with the entries in the final column, we find as the probable accidental discordance of one of the quantities in this column $\pm 0^{r}\cdot 00013$.

The discordances here dealt with depend partly on accidental errors of determination and partly on the fact that different groups of division marks have been utilised for the derivation of the coefficients. Now, if we adopt

Digitized by Google

as the probable accidental error of a single micrometer pointing the value $\pm 0''\cdot 20 = \pm 0^{r}\cdot 0033$, in accordance with the derived weights, the probable accidental errors in the determinations of a_{18}, b_{18} from the different groups are respectively :—

$$\pm 0^{r}\cdot 00027,$$

and in the determination of $a_{36}\cos 36x + b_{36}\sin 36x$

$$\pm 0^{r}\cdot 00014.$$

Thus, in two of the three cases the derived results are even more closely accordant than might be expected from *a priori* estimates of their probable accidental errors, and in the third case only slightly less so. We conclude that the discordances resulting from the use of different groups of division marks are insignificant compared with those resulting from purely accidental errors of determination, and that within the limits of accidental error of determination the mean results derived from all the groups, viz. :—

$$+0^{r}\cdot 00111\cos 18x + 0^{r}\cdot 00080\sin 18x - 0_{r}\cdot 00092\cos 36x + 0^{r}\cdot 00036\sin 36x,$$

may be taken as representing the parts of the division errors under investigation, not only for the division marks actually operated on, but also for the intermediate groups of division marks.

The probable error corresponding to weight unity, derived from the agreement of the several determinations of the quantities a_{18}, b_{18}, $a_{36}\cos 36x + b_{36}\sin 36x$, with the mean results from all, is

$$\pm 0^{r}\cdot 0039 = \pm 0''\cdot 23,$$

and the corresponding probable errors in the mean values of a_{18}, b_{18}, a_{36}, b_{36}, which include errors due to the accidental error of division as well as those due to the accidental error in determination, are respectively :—

$$\pm 0^{r}\cdot 00010, \quad \pm 0^{r}\cdot 00010, \quad \pm 0^{r}\cdot 00007, \quad \pm 0^{r}\cdot 00007.$$

The probable error of the quantity

$$a_{18}\cos 18x + b_{18}\sin 18x + a_{36}\cos 36x + b_{36}\sin 36x$$

is accordingly

$$\sqrt{\{(0^{r}\cdot 00010)^2(\cos^2 18x + \sin^2 18x) + (0^{r}\cdot 00007)^2(\cos^2 36x + \sin^2 36x)\}} = \pm 0^{r}\cdot 00012 = \pm 0''\cdot 007.$$

A table is appended giving a comparison between the parts B of the division errors, as derived directly for the division marks actually operated on, with the corresponding values as computed from the above interpolation formula.

Table of Relative Division Errors of Groups of Eighteen Symmetrically Distributed Division Marks.

Initial Division.	O.	C.	O − C.	Initial Division.	O.	C.	O − C.
° ′	r	r	r	° ′	r	r	r
0 0	− 0·0001	+ 0·0003	− 0·0004	10 0	− 0·0021	− 0·0021	·0000
0 30	+ 5	+ 5	0	10 30	− 14	− 20	+ 6
1 0	+ 4	+ 8	− 4	11 0	− 16	− 18	+ 2
1 30	+ 13	+ 11	+ 2	11 30	− 18	− 16	− 2
2 0	+ 14	+ 14	0	12 0	− 17	− 13	− 4
2 30	+ 20	+ 17	+ 3	12 30	− 12	− 10	− 2
3 0	+ 9	+ 19	− 10	13 0	+ 1	− 7	+ 8
3 30	+ 22	+ 20	+ 2	13 30	− 3	− 4	+ 1
4 0	+ 19	+ 21	− 2	14 0	− 3	− 2	− 1
4 30	+ 24	+ 19	+ 5	14 30	− 5	0	− 5
5 0	+ 24	+ 17	+ 7	15 0	− 2	+ 1	− 3
5 30	+ 7	+ 14	− 7	15 30	+ 2	+ 2	0
6 0	+ 1	+ 9	− 8	16 0	+ 11	+ 1	+ 10
6 30	+ 13	+ 4	+ 9	16 30	− 8	+ 1	− 9
7 0	+ 7	− 1	+ 8	17 0	− 4	0	− 4
7 30	− 14	− 6	− 8	17 30	+ 6	− 1	+ 7
8 0	− 14	− 11	− 3	18 0	+ 4	− 2	+ 6
8 30	− 15	− 15	0	18 30	− 4	− 2	− 2
9 0	− 17	− 18	+ 1	19 0	+ 1	− 1	+ 2
9 30	− 23	− 20	− 3	19 30	+ 4	0	+ 4

O denotes values derived directly from the observations,

C values computed by means of the formula :—

$$0^{r}\cdot 00111\cos 18x + 0^{r}\cdot 00080\sin 18x - 0^{r}\cdot 00092\cos 36x + 0^{r}\cdot 00036\sin 36x.$$

Digitized by Google

§ 8. *Examination of the Errors of Division Periodic within* 5°.

The use of the microscopes provided with divided object-glasses allows of the determination of those parts of the errors of graduation which may be expressed by the formula—

$$a_{72}\cos 72x + b_{72}\sin 72x + a_{144}\cos 144x + b_{144}\sin 144x + \ldots .$$

by exactly similar processes to those previously employed. The division marks x, $x+1°$; $x+1°$, $x+2°$; $x+2°$, $x+3°$; $x+3°$, $x+4°$; $x+4°$, $x+5°$ are brought in succession under one of these microscopes, and readings taken on the two division marks visible under either microscope, a pair of such microscopes situated at opposite extremities of a diameter being used. The circle is then rotated through 180°, so as to bring the same sets of division marks under the opposite microscopes and provide for the elimination of errors due to flexure of the circle. The whole series of operations is then repeated in reversed order of measurement. Such a set will evidently lead to a set of equations of condition, of which the typical form is—

$$X_0 - X_1 + y_1 = n_1,\ X_1 - X_2 + y_1 = n_2,\ X_2 - X_3 + y_1 = n_3,\ X_3 - X_4 + y_1 = n_4,\ X_4 - X_5 + y_1 = n_5,$$

where X_0, X_1, etc., denote the means of the division errors of pairs of opposite division marks, and each absolute term has the equivalent weight of four micrometer pointings.

Thirty-six such sets are required to complete the round of the circle starting at 0°, 5°, 10°, ...; and if we take the means of the equations resulting from each set in order, we derive equations of the form—

$$C_0 - C_1 + y = N_1,\ C_1 - C_2 + y = N_2,\ C_2 - C_3 + y = N_3,\ C_3 - C_4 + y = N_4,\ C_4 - C_0 + y = N_5,$$

where

$$C_0 = \tfrac{1}{36}(X_0 + X_5 + X_{10} + \ldots + X_{175}),$$
$$C_1 = \tfrac{1}{36}(X_1 + X_6 + X_{11} + \ldots + X_{176}),$$
$$\text{etc.,} \qquad \text{etc.,}$$

and each N has now the weight of 144 micrometer pointings.

Subjecting the C's to the condition

$$C_0 + C_1 + C_2 + C_3 + C_4 = 0,$$

we obtain the solution

$$y = \tfrac{1}{5}(N_1 + N_2 + N_3 + N_4 + N_5),$$
$$C_0 = \tfrac{1}{5}(2N_1 + N_2 - N_4 - 2N_5),$$
$$C_1 = \tfrac{1}{5}(2N_2 + N_3 - N_5 - 2N_1),$$
$$C_2 = \tfrac{1}{5}(2N_3 + N_4 - N_1 - 2N_2),$$
$$C_3 = \tfrac{1}{5}(2N_4 + N_5 - N_2 - 2N_3),$$
$$C_4 = \tfrac{1}{5}(2N_5 + N_1 - N_3 - 2N_4),$$

whence it is easily seen that each C is derived with a weight 360.

The division marks on both circles, starting with the marks 0°, 1°, etc., were operated on in this manner with the following results :—

	C_0.	C_1.	C_2.	C_3.	C_4.
	r	r	r	r	r
Fixed circle . .	− 0·0006	− 0·0001	− 0·0004	+ 0·0001	+ 0·0009
Moveable circle . .	+ 0·0003	·0000	+ 0·0002	− 0·0002	− 0·0003

These quantities are all small, and for the moveable circle within the limits of the accidental errors of their determination. For the fixed circle the quantities somewhat exceed their accidental errors as estimated from *a priori* considerations, while their reality, as representing in some measure real errors of division, is confirmed by the comparatively close agreement in the indications of the various sets on which they depend. They do not appear to follow any simple law which would enable us to extend the results by interpolation, so as to be applicable to the division marks other than those directly operated on. As the result of analysis, however, we may here quote the following expression by which they are represented :—

$$C_x = -0^r{\cdot}00004\cos 72x - 0^r{\cdot}00049\sin 72x - 0^r{\cdot}00051\cos 144x - 0^r{\cdot}00004\sin 144x.$$

As a check on the validity of this formula a new series of operations was performed on the intermediate set of division marks starting with 0° 30′.

Digitized by Google

The results of these operations were as follows :—

$$C_{0^\circ 30'} = -0^r\cdot0011,\ C_{1^\circ 30'} = +0^r\cdot0005,\ C_{2^\circ 30'} = +0^r\cdot0006,\ C_{3^\circ 30'} = -0^r\cdot0001,\ C_{4^\circ 30'} = +0^r\cdot0001,$$

from which may be derived the formula—

$$C_x = -0^r\cdot00059\cos 72x - 0^r\cdot00011\sin 72x - 0^r\cdot00004\cos 144x - 0^r\cdot00059\sin 144x.$$

It will be seen that there is little agreement except in sign between the indications of the two sets, such as would justify us in extending our results to the intermediate groups of divisions. Accordingly, the derived values of C have been regarded as accidental errors of determination, and C has been assumed to be zero throughout.

From the actual magnitudes of C as derived, the probable discordance of a single value of C from zero is found to be

$$\pm 0''\cdot025,$$

and this is due in part to accidental errors of determination, and in part to actual errors of division.

Now, in order to form an estimate of the probable accidental error of determination, the two halves of a set of determinations taken in settings of the circle differing by 180° were separately reduced. The resulting equations of condition were as follows :—

$C_0-C_1+y=-0^r\cdot0227$,	$C_0-C_1+y'=-0^r\cdot0218$,	$C_{0^\circ 30'}-C_{1^\circ 30'}+y''=-0^r\cdot0278$,	$C_{0^\circ 30'}-C_{1^\circ 30'}+y'''=-0^r\cdot0279$,
$C_1-C_2+y=-\ \cdot0218$,	$C_1-C_2+y'=-\ \cdot0212$,	$C_{1^\circ 30'}-C_{2^\circ 30'}+y''=-\ \cdot0262$,	$C_{1^\circ 30'}-C_{2^\circ 30'}+y'''=-\ \cdot0266$,
$C_2-C_3+y=-\ \cdot0219$,	$C_2-C_3+y'=-\ \cdot0227$,	$C_{2^\circ 30'}-C_{3^\circ 30'}+y''=-\ \cdot0259$,	$C_{2^\circ 30'}-C_{3^\circ 30'}+y'''=-\ \cdot0255$,
$C_3-C_4+y=-\ \cdot0224$,	$C_3-C_4+y'=-\ \cdot0227$,	$C_{3^\circ 30'}-C_{4^\circ 30'}+y''=-\ \cdot0274$,	$C_{3^\circ 30'}-C_{4^\circ 30'}+y'''=-\ \cdot0255$,
$C_4-C_0+y=-0\ \cdot0202$,	$C_4-C_0+y'=-0\ \cdot0205$,	$C_{4^\circ 30'}-C_{0^\circ 30'}+y''=-0\ \cdot0261$,	$C_{4^\circ 30'}-C_{0^\circ 30'}+y'''=-0\ \cdot0240$,

where each absolute term has the equivalent weight of seventy-two pointings. It appears, at least in the second set, that these equations cannot be reasonably satisfied by assuming the same value of y as applicable to both halves of the set—a circumstance which may be explained by supposing that the plane of the circle undergoes slight changes as the circle is rotated, or perhaps that the variations of the circle from a true plane figure are significant. Thus we have distinguished the different values of y by accents, and from these equations on eliminating the C's we find :—

$y-y'=-0^r\cdot0009$,	$y''-y'''=+0^r\cdot0001$,
$y-y'=-\ \cdot0006$,	$y''-y'''=+\ \cdot0004$,
$y-y'=+\ \cdot0008$,	$y''-y'''=-\ \cdot0004$,
$y-y'=+\ \cdot0003$,	$y''-y'''=-\ \cdot0019$,
$y-y'=+0\ \cdot0003$,	$y''-y'''=-0\ \cdot0021$,

where each absolute term is of weight 36 ; whence in the mean

$$y-y'=0\cdot0000, \qquad y''-y'''=-0^r\cdot0008.$$

From the discordances of the separate determinations from these means we derive as the probable accidental error of a single micrometer pointing taken with one of the divided object-glass microscopes

$$\pm 0''\cdot24,$$

and therefore the probable accidental error affecting one of the derived quantities C is

$$\pm 0''\cdot013.$$

Thus, finally, the probable accidental error, introduced by adopting the value zero for C for a set of seventy-two symmetrical division marks selected at random, is

$$\pm\sqrt{\{(0''\cdot025)^2-(0''\cdot013)^2\}}=\pm0''\cdot021.$$

§ 9. *Determination of the Errors of Special Division Marks.*

The preceding investigations, while leading to a strong determination of the errors of graduation of each group of six divisions in relation to the circle as a whole, give a comparatively weak determination of the local distribution of errors, on account of the fact that these errors have in part been smoothed down, by the use of an interpolation formula for the determination of the parts B and C. Accordingly, two series of division marks on each circle were

Digitized by Google

selected for direct investigation of the local distribution of error. The chief object was to investigate these parts of the circle in such a manner that they might be available for the exact determination of the "runs" of the reading microscopes; but incidentally they also serve for the determination of the only part of the division errors not previously examined, viz. those which are periodic within 1° of the circumference of the circle.

The parts of the fixed circle first selected were those which appear under the six primary microscopes when the pointer reading varies between 0° and 1° and between 29° and 30°. Subsequently, in order to secure greater symmetry for the purpose of examining the errors periodic within a single degree, these were extended so as to include all the divisions under the primary microscopes between the pointer readings 359° to 1° and 29° to 31°. For the moveable circle the divisions corresponding to the pointer readings 25° to 26° and 55° to 56° were investigated in like manner.

As an illustrative example, let us take the case of the intervals on the fixed circle corresponding to the pointer readings 0° – 1°. A single set of observations consisted in setting the circle in succession at the pointer readings 0°, 0° 5′, 0° 10′, . . . 0°55′, and measuring in terms of the micrometer screws at each setting the corresponding spaces which appeared under the microscopes—*i.e.* at the setting 0° the spaces measured would be that between the marks 30° 0′ and 30° 5′, together with those differing from the latter by multiples of 60°; the measures were next repeated in reversed order.

Eight such sets of operations were performed, two by each of four different observers under the eastern microscopes, and a similar eight under the western microscopes, and the mean results from all the sets for the groups of six spaces which appear simultaneously under the microscopes are contained in the following tables :—

Measurements of 5′ Spaces in terms of the Micrometer Screws.

Pointer.	I. Eastern Microscopes.	II. Western Microscopes.
° ′	r	r
0 0	4·9671	4·9890
0 5	·9634	·9871
0 10	·9638	·9871
0 15	·9644	·9893
0 20	·9660	·9883
0 25	·9634	·9874
0 30	·9659	·9896
0 35	·9642	·9877
0 40	·9639	·9870
0 45	·9667	·9891
0 50	·9637	·9884
0 55	·9661	·9897

The mean division errors for the extreme division marks pointed on, as already determined, are sensibly identical, whence, on taking means of the above measures, we derive, as the micrometer equivalent of 5′ of arc :—

(1) With eastern microscopes . . . 4ʳ·9649.
(2) With western microsopes . . . 4ʳ·9883.

Thus the excesses of the spaces over the normal 5′ of arc, expressed in screw revolutions derived from this set of measures, are as follows :—

Pointer.	I. Eastern Microscopes.	II. Western Microscopes.	Mean.
° ′	r	r	r
0 0	+ 0·0022	+ 0·0007	+ 0·0015
0 5	− 15	− 12	− 14
0 10	− 11	− 12	− 12
0 15	− 5	+ 10	+ 3
0 20	+ 11	0	+ 6
0 25	− 14	− 9	− 11
0 30	+ 10	+ 12	+ 11
0 35	− 7	− 6	− 6
0 40	− 10	− 13	− 12
0 45	+ 18	+ 8	+ 13
0 50	− 12	+ 1	− 6
0 55	+ 12	+ 14	+ 13

Digitized by Google

The corresponding mean results for the remaining intervals operated on on the fixed circle are included in the following table :—

Pointer.	Mean Excess of Space.	Pointer.	Mean Excess of Space.	Pointer.	Mean Excess of Space.
° ′	r	° ′	r	° ′	r
29 0	+ 0·0011	30 0	− 0·0015	59 0	+ 0·0009
29 5	− 14	30 5	− 2	59 5	− 18
29 10	+ 2	30 10	+ 24	59 10	+ 15
29 15	− 18	30 15	− 3	59 15	− 4
29 20	+ 18	30 20	+ 10	59 20	− 2
29 25	− 2	30 25	− 18	59 25	+ 2
29 30	+ 5	30 30	+ 10	59 30	+ 7
29 35	− 11	30 35	− 9	59 35	− 9
29 40	+ 5	30 40	+ 3	59 40	+ 2
29 45	+ 10	30 45	− 5	59 45	− 6
29 50	− 10	30 50	− 6	59 50	+ 2
29 55	+ 3	30 55	+ 11	59 55	+ 3

The mean excesses of the spaces on the moveable circle, which have been investigated in like manner for the purpose of determining the runs of the reading microscopes, are contained in the following table :—

Pointer.	Mean Excess of Space.	Pointer.	Mean Excess of Space.	Pointer.	Mean Excess of Space.	Pointer.	Mean Excess of Space.
° ′	r	° ′	r	° ′	r	° ′	r
25 0	+ 0·0010	25 30	0	55 0	− 0·0004	55 30	+ 0·0010
25 5	+ 4	25 35	+ 0·0010	55 5	− 13	55 35	+ 12
25 10	+ 3	25 40	− 15	55 10	+ 2	55 40	− 9
25 15	+ 4	25 45	− 5	55 15	− 1	55 45	+ 18
25 20	+ 7	25 50	+ 23	55 20	+ 13	55 50	− 30
25 25	− 38	25 55	− 1	55 25	− 16	55 55	+ 18

§ 10. *Determination of Errors of Division Periodic within* 1°.

The relative errors of division of the means of six division marks indicated by the processes of the preceding section, of course, exhibit discordances due to accidental errors of determination from those previously derived by other methods; but these discordances may be in part due to a real error in the spacing of the marks which repeats itself periodically within each single degree, and which the earlier processes have been inadequate to exhibit. Thus, if we correct the micrometer readings for the parts of the errors of division previously derived, the results will indicate the errors in spacing due to the outstanding parts of the division errors periodic within a single degree, of course, however, affected by the outstanding errors of observation.

Denoting these parts of the errors by d_0, d_5, d_{10}, . . . d_{55}, we thus obtain from operations between the pointer readings 0° and 1° on the fixed circle :—

$$\left.\begin{aligned} d_0 - d_5 &= +0^{r}\cdot0011 \\ d_5 - d_{10} &= -\ 21 \\ d_{10} - d_{15} &= -\ 6 \\ d_{15} - d_{20} &= +\ 7 \\ d_{20} - d_{25} &= +\ 9 \\ d_{25} - d_{30} &= -\ 7 \\ d_{30} - d_{35} &= +\ 7 \\ d_{35} - d_{40} &= -\ 2 \\ d_{40} - d_{45} &= -\ 13 \\ d_{45} - d_{50} &= +\ 10 \\ d_{50} - d_{55} &= -\ 18 \\ d_{55} - d_0 &= +\ 23 \end{aligned}\right\} \text{ whence } \left\{\begin{aligned} d_0 - d_5 &= +0^{r}\cdot0011, \\ d_0 - d_{10} &= -\ 10, \\ d_0 - d_{15} &= -\ 16, \\ d_0 - d_{20} &= -\ 9, \\ d_0 - d_{25} &= \quad 0, \\ d_0 - d_{30} &= -\ 7, \\ d_0 - d_{35} &= \quad 0, \\ d_0 - d_{40} &= -\ 2, \\ d_0 - d_{45} &= -\ 15, \\ d_0 - d_{50} &= -\ 5, \\ d_0 - d_{55} &= -\ 23, \\ d_0 - d_0 &= \quad 0. \end{aligned}\right.$$

Thus

$$12d_0 - \Sigma d = -0^{r}\cdot0076,$$

and if we assume that $\Sigma d = 0$, so that the mean division error of all the division marks on the circle is zero,

$$d_0 = -0^{r}\cdot0006.$$

Digitized by Google

Thus, from this series of observations alone we derive :—

d_0	$= -0^r\cdot0006$,	d_{30}	$= +0^r\cdot0001$,
d_5	$= -\quad 17$,	d_{35}	$= -\quad 6$,
d_{10}	$= +\quad 4$,	d_{40}	$= -\quad 4$,
d_{15}	$= +\quad 10$,	d_{45}	$= +\quad 9$,
d_{20}	$= +\quad 3$,	d_{50}	$= -\quad 1$,
d_{25}	$= -\quad 6$,	d_{55}	$= +\quad 17$.

The principal part of the errors of observation affecting these values may be expected to arise from the errors affecting the quantities A, B, C, which have been utilised in their determination. These errors will be most effectively reduced by combination of the results with those derived from other groups of division marks. The results derived from the four groups operated on are given below.

	0°–1°.	29°–30°.	30°–31°.	59°–60°.	Mean.
	r	r	r	r	r
d_0	− 0·0006	− 0·0001	+ 0·0002	− 0·0006	− 0·0002
d_5	− 17	− 7	+ 22	− 20	− 5
d_{10}	+ 4	− 9	+ 21	− 2	− 3
d_{15}	+ 10	− 2	+ 4	− 1	+ 3
d_{20}	+ 3	− 3	+ 5	− 5	0
d_{25}	− 6	+ 3	− 11	+ 5	− 2
d_{30}	+ 1	− 2	+ 1	0	0
d_{35}	− 6	+ 3	− 20	0	− 6
d_{40}	− 4	+ 4	− 5	+ 9	+ 1
d_{45}	+ 9	+ 22	− 16	+ 6	+ 5
d_{50}	− 1	− 16	− 4	+ 15	− 1
d_{55}	+ 17	+ 2	+ 4	+ 3	+ 7

The mean results are of the order of their probable errors of determination, and are, besides, quite insignificant in value. We conclude that there are no sensible errors of division of the character here under investigation.

§ 11. *Final Adjustment of the Observations.*

Having established the fact that the division errors periodic within a single degree are insensible, the observations dealt with in the paragraphs immediately preceding should lead to results identical with those previously derived, apart from accidental errors and the errors resulting from the use of interpolation formulæ. It remains to distribute the discordances so as to obtain the most probable errors of the division marks concerned from the combination of both series of observations.

Taking the group of division marks between the pointer readings $0° - 1°$, the earlier processes led to the following results; in which the division errors of the thirteen sets of division marks involved are denoted by D_0, D_1, . . . D_{11}, D_{12}.

$D_0 = -0^r\cdot0036$	$D_5 = -0^r\cdot0034$	$D_9 = -0^r\cdot0031$
$D_1 = -\quad 40$	$D_6 = -\quad 30$	$D_{10} = -\quad 34$
$D_2 = -\quad 47$	$D_7 = -\quad 34$	$D_{11} = -\quad 46$
$D_3 = -\quad 41$	$D_8 = -\quad 30$	$D_{12} = -\quad 36.$
$D_4 = -\quad 37$		

In like manner the direct connection between the successive groups of divisions yields the equations of condition :—

$D_0 - D_1 + y = +0^r\cdot0015$	$D_4 - D_5 + y = +0^r\cdot0006$	$D_8 - D_9 + y = -0^r\cdot0012$
$D_1 - D_2 + y = -\quad 14$	$D_5 - D_6 + y = -\quad 11$	$D_9 - D_{10} + y = +\quad 13$
$D_2 - D_3 + y = -\quad 12$	$D_6 - D_7 + y = +\quad 11$	$D_{10} - D_{11} + y = -\quad 6$
$D_3 - D_4 + y = +\quad 3$	$D_7 - D_8 + y = -\quad 6$	$D_{11} - D_{12} + y = +\quad 13,$

where the unknown quantity y has been introduced so as to permit of the correction to the mean run of the reading microscopes.

Digitized by Google

It should be mentioned that the latter equations, depending in all on sixteen complete sets of observation, each involving measurements in direct and reversed order, and each absolute term representing the difference between the mean readings of six microscopes, have weight equivalent to that of ninety-six micrometer pointings. The square of the probable error of an absolute term of one of the former equations as obtained from the derived values of the probable errors of the quantities A, B, C, is

$$(0''{\cdot}027)^2+(0''{\cdot}007)^2+(0''{\cdot}013)^2=(0''{\cdot}031)^2,$$

and hence the weight of such an equation is equivalent to about that of fifty micrometer pointings.

In the first instance the equations were combined by least squares giving the latter group weight 3 compared with the former, yielding the following results :—

$D_0 = -0^r{\cdot}0035$	$D_5 = -0^r{\cdot}0039$	$D_{10} = -0^r{\cdot}0038$
$D_1 = -\ 51$	$D_6 = -\ 28$	$D_{11} = -\ 34$
$D_2 = -\ 41$	$D_7 = -\ 39$	$D_{12} = -\ 45$
$D_3 = -\ 32$	$D_8 = -\ 34$	$y = -0{\cdot}00008.$
$D_4 = -\ 34$	$D_9 = -\ 25$	

On substituting in the original equations of condition the following residuals, in the sense O – C, were derived from the former group of equations :—

$-0^r{\cdot}0001$	$-0^r{\cdot}0003$	$+0^r{\cdot}0005$	$+0^r{\cdot}0004$
$+\ 11$	$+\ 5$	$+\ 4$	$-\ 12$
$-\ 6$	$-\ 2$	$-\ 6$	$+\ 9$;
$-\ 9$			

while the residuals from the second group are—

$0^r{\cdot}0000$	$+0^r{\cdot}0002$	$+0^r{\cdot}0001$	$+0^r{\cdot}0001$
$-\ 3$	$+\ 2$	0	$-\ 1$
$-\ 2$	$+\ 1$	$-\ 2$	$+\ 3.$

From the other three intervals operated on in like manner we derive—

	29°–30°.	30°–31°.	59°–60°.
D_0	$+0^r{\cdot}0049$	$+0^r{\cdot}0038$	$-0^r{\cdot}0056$
D_1	39	52	63
D_2	53	56	46
D_3	49	38	62
D_4	66	43	57
D_5	46	39	56
D_6	48	60	57
D_7	41	55	64
D_8	50	64	55
D_9	44	62	56
D_{10}	39	65	47
D_{11}	48	69	44
D_{12}	$+0{\cdot}0045$	$+0{\cdot}0058$	$-0{\cdot}0044$
y	$-0{\cdot}00004$	$+0{\cdot}00020$	$+0{\cdot}00010$

Digitized by Google

The representation of the observations by these values is shown by the following tables of residuals :—

First Group of Observations.

Residuals O – C.

29°–30°.	30°–31°.	59°–60°.
r	r	r
– 0·0003	+ 0·0008	– 0·0003
+ 2	– 10	+ 11
+ 4	– 10	– 4
– 1	+ 2	– 2
+ 1	– 2	+ 3
– 3	+ 9	– 4
+ 2	– 5	+ 2
– 1	+ 12	+ 2
0	– 2	– 5
– 17	+ 9	– 1
+ 16	0	– 10
– 1	– 5	+ 5
+ 1	– 6	+ 8

Second Group of Observations.

Residuals O – C.

29°–30°.	30°–31°.	59°–60°.
r	r	r
+ 0·0001	– 0·0003	+ 0·0001
0	0	– 2
– 2	+ 4	– 2
– 1	+ 2	0
– 2	+ 4	– 2
0	+ 1	0
– 2	+ 3	– 1
– 2	– 2	– 1
– 1	– 1	0
+ 5	– 4	+ 1
0	– 4	+ 4
0	– 2	+ 2

The extremely close representation of the observations throughout in the second group would appear to indicate that these observations have been allowed to exercise undue influence in the formation of the final values.

Moreover, no account has been taken of the juncture of the first and fourth series of spaces and of the second and third at their common extremity. Consequently it seemed desirable to make a second solution in which the observations extending over the interval 29°–31°, and over the interval 59°–61°, were simultaneously reduced, ensuring continuity at the common terminals of the former grouping. Advantage was taken of this revised solution to modify the weights and to give the observations of the second group weight 2 instead of weight 3 compared with those of the first group—a value more in accordance with that indicated by the *a priori* considerations with regard to their relative values.

In this manner were derived the following values of the errors of division for the mean of six divisions :—

Division under Pointer.		Division under Pointer.		Division under Pointer.		Division under Pointer.	
° ′	r	° ′	r	° ′	r	° ′	r
29 0	+ 0·0049	30 0	+ 0·0041	59 0	– 0·0056	0 0	– 0·0040
5	+ 39	5	+ 52	5	– 62	5	– 53
10	+ 53	10	+ 55	10	– 46	10	– 43
15	+ 49	15	+ 37	15	– 62	15	– 33
20	+ 66	20	+ 43	20	– 57	20	– 35
25	+ 46	25	+ 40	25	– 56	25	– 38
30	+ 47	30	+ 61	30	– 57	30	– 28
35	+ 40	35	+ 56	35	– 64	35	– 38
40	+ 49	40	+ 65	40	– 56	40	– 33
45	+ 43	45	+ 63	45	– 56	45	– 25
50	+ 38	50	+ 65	50	– 47	50	– 38
29 55	+ 46	55	+ 68	55	– 42	55	– 35
		31 0	+ 56			1 0	– 44

Digitized by Google

and the corresponding corrections to the mean runs over the four intervals—

29°–30°.	30°–31°.	59°–60°.	0°–1°.
$-0^{r}\cdot00006$	$+0^{r}\cdot00015$	$+0^{r}\cdot00013$	$-0^{r}\cdot00004$.

The modification of the weights, it will be seen, has not produced any material effects on the results.

On substituting these values in the equations of condition we obtain the following table of residuals from the observations of the first group :—

Interval 0°–1°.	Interval 29°–30°.	Interval 30°–31°.	Interval 59°–60°.
r	r	r	r
+ 0·0004	− 0·0003	+ 0·0005	− 0·0003
+ 13	+ 2	− 10	+ 10
− 4	+ 4	− 9	− 4
− 8	− 1	+ 3	− 2
− 2	+ 1	− 2	+ 3
+ 4	− 3	+ 8	− 4
− 2	+ 3	− 6	+ 2
+ 4	0	+ 11	+ 2
+ 3	+ 1	− 3	− 4
− 6	− 16	+ 8	− 1
+ 4	+ 17	0	− 10
− 11	+ 1	− 4	+ 3
+ 8	+ 5	− 4	+ 4

while from the second group we obtain the residuals—

Interval 0°–1°.	Interval 29°–30°.	Interval 30°–31°.	Interval 59°–60°.
r	r	r	r
+ 0·0002	+ 0·0002	− 0·0005	+ 0·0002
− 4	+ 1	0	− 3
− 2	− 1	+ 5	− 2
+ 1	0	+ 4	0
+ 3	− 1	+ 6	− 2
− 1	0	+ 2	0
+ 1	− 1	+ 4	− 1
− 1	− 1	− 1	− 2
− 4	0	0	+ 1
0	+ 6	− 4	+ 1
− 3	− 1	− 4	+ 6
+ 4	− 1	− 2	+ 4

The representation of the observations is sufficiently close, and the values now derived have been finally adopted.

§ 12. *Summary and Table of Results.*

The following tables contain the results of the division error investigations, but it may be well to summarise here the data on which they are based.

The investigation is restricted to that of the mean division error of pairs of opposite division marks, and for each pair the error of division may be regarded as consisting of five parts—X, A, B, C, *d*.

The parts X have been separately determined for each exact 5° on either circle by each of five different observers, and for the intermediate exact degrees of the fixed circle by a single set in each case, yielding results with a probable error $\pm0''\cdot015$ for the exact 5° division marks and $\pm0''\cdot033$ for the intermediate division marks. The results are contained in the tables of § 4.

The parts A have been determined for the exact 5° division marks of the fixed circle by each of five different observers, and by a single set of operations in each case for every division mark on the fixed circle and for the exact degrees on the moveable circle, yielding results with a probable accidental error $\pm0''\cdot011$ for the 5° division marks on the fixed circle and $\pm0''\cdot027$ for the remaining division marks. The results of this part of the investigation are tabulated in § 5.

The parts B have been investigated by means of a single set of operations in each case for each exact degree

Digitized by Google

on the moveable circle and for each half degree on the fixed circle, the derived results having a probable error of $\pm 0''\cdot 019$. The values as derived for the fixed circle are found to be extremely closely represented by the formula—

$$+0^r\cdot 00111 \cos 18x + 0^r\cdot 00080 \sin 18x - 0^r\cdot 00092 \cos 36x + 0^r\cdot 00036 \sin 36x,$$

where the argument x denotes the division mark pointed on. This formula has accordingly been adopted as an interpolation formula to extend the results to the division marks other than those directly operated on.

The parts C have been examined by a symmetrical series of operations for each exact degree of the moveable circle and for each half degree of the fixed circle. In all cases they are found to be scarcely sensible, though in the case of the fixed circle they appear to somewhat exceed their probable accidental errors of determination. They do not, however, follow any systematic law which would admit of their extension by means of an interpolation formula to intermediate division marks, and they have accordingly been neglected.

The parts d have been examined by a process confined to twenty-four single-degree arcs on the fixed circle. Since this determination is not completely symmetrical, the parts d can only be derived with the aid of a previous knowledge of the parts A, B, C. As the result of the investigation, however, the parts in question are found to be quite insensible.

Finally, the observations involved in the last series of operations have been combined by a least square process with the results of the earlier processes, so as to obtain a more exact determination of the errors of division of the twenty-four arcs (contained in four symmetrical groups of six). The arcs thus examined are of special value for the determination of the "runs" of the reading microscopes.

In the following tables are contained the final results of the division error determinations. The actual derived values of the quantities B and C have been used in the formation of these tables—except in the extended table for the mean of six divisions for the fixed circle, where the interpolated values of B have been used throughout and the part C has been rejected. In this table the quantities which have been derived by a combination of the general investigation with a local investigation for the determination of the "run" divisions are indicated by an asterisk. Further, the quantities are tabulated in the sense "correction for division error," *i.e.* they are of opposite signs to the division error as previously defined—viz. the amount by which a micrometer reading *exceeds* the value it would have if no division error existed—and to avoid ambiguity in the sign with which they are to be applied they have all been increased by a constant amount sufficiently large to ensure that none are negative.

Table of Corrections for Division Error for Separate Diameters.

FIXED CIRCLE.

Argument—Division Marks under Microscopes.

°	″	°	″	°	″	°	″	°	″	°	″
0, 180	1·48	30, 210	0·97	60, 240	0·80	90, 270	1·53	120, 300	0·21	150, 330	1·41
1, 181	1·54	31, 211	0·88	61, 241	0·65	91, 271	1·45	121, 301	0·09	151, 331	1·45
2, 182	1·46	32, 212	0·85	62, 242	0·20	92, 272	1·32	122, 302	0·49	152, 332	1·66
3, 183	1·49	33, 213	1·10	63, 243	0·40	93, 273	1·16	123, 303	0·71	153, 333	1·54
4, 184	1·25	34, 214	1·18	64, 244	0·42	94, 274	1·13	124, 304	0·52	154, 334	1·64
5, 185	1·19	35, 215	1·37	65, 245	0·56	95, 275	1·09	125, 305	0·59	155, 335	1·70
6, 186	1·49	36, 216	0·86	66, 246	0·58	96, 276	0·88	126, 306	0·50	156, 336	1·69
7, 187	1·48	37, 217	1·09	67, 247	1·24	97, 277	0·90	127, 307	0·35	157, 337	2·00
8, 188	1·45	38, 218	0·92	68, 248	1·52	98, 278	0·65	128, 308	0·39	158, 338	1·94
9, 189	1·57	39, 219	0·91	69, 249	1·21	99, 279	0·63	129, 309	0·59	159, 339	1·94
10, 190	1·80	40, 220	0·96	70, 250	1·61	100, 280	0·79	130, 310	0·71	160, 340	2·09
11, 191	1·86	41, 221	0·60	71, 251	1·19	101, 281	0·73	131, 311	0·85	161, 341	1·97
12, 192	1·61	42, 222	0·31	72, 252	1·20	102, 282	0·74	132, 312	1·06	162, 342	2·05
13, 193	1·77	43, 223	0·13	73, 253	0·70	103, 283	0·51	133, 313	0·86	163, 343	2·18
14, 194	1·13	44, 224	0·01	74, 254	0·70	104, 284	0·73	134, 314	1·30	164, 344	1·70
15, 195	1·07	45, 225	0·10	75, 255	0·85	105, 285	0·52	135, 315	1·72	165, 345	1·79
16, 196	0·99	46, 226	0·04	76, 256	0·63	106, 286	0·59	136, 316	1·72	166, 346	2·22
17, 197	1·15	47, 227	0·00	77, 257	1·09	107, 287	0·38	137, 317	1·55	167, 347	2·14
18, 198	1·12	48, 228	0·14	78, 258	0·94	108, 288	0·55	138, 318	1·64	168, 348	1·88
19, 199	1·06	49, 229	0·10	79, 259	0·99	109, 289	0·92	139, 319	1·29	169, 349	1·52
20, 200	1·10	50, 230	0·24	80, 260	0·85	110, 290	0·79	140, 320	1·52	170, 350	1·82
21, 201	1·10	51, 231	0·16	81, 261	0·97	111, 291	0·75	141, 321	1·60	171, 351	1·73
22, 202	1·32	52, 232	0·31	82, 262	0·88	112, 292	0·51	142, 322	1·50	172, 352	2·05
23, 203	1·09	53, 233	0·39	83, 263	0·62	113, 293	0·16	143, 323	1·74	173, 353	1·60
24, 204	0·82	54, 234	0·58	84, 264	0·73	114, 294	0·35	144, 324	1·73	174, 354	1·13
25, 205	0·90	55, 235	0·29	85, 265	1·15	115, 295	0·37	145, 325	1·67	175, 355	1·40
26, 206	1·23	56, 236	0·34	86, 266	1·40	116, 296	0·35	146, 326	1·40	176, 356	1·40
27, 207	1·03	57, 237	0·44	87, 267	1·30	117, 297	0·32	147, 327	1·40	177, 357	1·33
28, 208	1·13	58, 238	0·23	88, 268	1·43	118, 298	0·36	148, 328	1·64	178, 358	1·34
29, 209	0·96	59, 239	0·76	89, 269	1·50	119, 299	0·21	149, 329	1·58	179, 359	1·13

Digitized by Google

Corrections for Division Error for the Mean of Six Divisions.

FIXED CIRCLE.

Argument—Division Marks under Microscopes.

						0′.	5′.	10′.	15′.	20′.	25′.	30′.	35′.	40′.	45′.	50′.	55′.
0°	60°	120°	180°	240°	300°	+ 0″·24*	+ 0″·17*	+ 0″·16*	+ 0″·26*	+ 0″·23*	+ 0″·25*	+ 0″·12*	+ 0″·15*	+ 0″·10*	+ 0″·11*	+ 0″·10*	+ 0″·08*
					1	·15*	·07	·20	·10	·18	·05	·14	·11	·08	·10	·07	·15
					2	·13	·06	·07	·05	·21	·26	·13	·14	·19	·14	·20	·19
					3	·25	·13	·12	·17	·20	·22	·22	·22	·20	·19	·13	·19
					4	·21	·25	·24	·13	·16	·22	·13	·14	·25	·25	·26	·22
					5	·22	·22	·23	·21	22	·14	·22	·20	·31	·28	·22	·17
					6	·25	·22	·32	·32	·45	·44	·35	·46	·54	·47	·47	·48
					7	·49	·46	·44	·53	·56	·51	·57	·50	·51	·56	·49	·55
					8	·54	·66	·59	·54	·67	·59	·74	·60	·71	·62	·70	·67
					9	·61	·65	·70	·67	·64	·65	·68	·63	·68	·68	·76	·70
10	70	130	190	250	310	+ 0·77	+ 0·72	+ 0·77	+ 0·74	+ 0·79	+ 0·67	+ 0·74	+ 0·74	+ 0·77	+ 0·69	+ 0·73	+ 0·68
					1	·74	·80	·73	·76	·59	·58	·61	·74	·72	·61	·64	·59
					2	·68	·67	·64	·64	·50	·64	·59	·47	·56	·64	·56	·65
					3	·61	·66	·64	·56	·53	·48	·52	·59	·59	·59	·51	·58
					4	·52	·53	·55	·43	·52	·55	·64	·60	·58	·59	·55	·57
					5	·60	·52	·56	·64	·58	·56	·56	·60	·58	·62	·62	·55
					6	·61	·67	·48	·58	·51	·50	·58	·61	·58	·55	·63	·61
					7	·65	·59	·58	·65	·71	·68	·65	·65	·68	·68	·74	·64
					8	·71	·71	·66	·74	·74	·70	·71	·58	·74	·63	·72	·74
					9	·62	·56	·59	·56	·58	·58	·62	·56	·53	·49	·59	·61
20	80	140	200	260	320	+ 0·53	+ 0·62	+ 0·55	+ 0·59	+ 0·50	+ 0·59	+ 0·55	+ 0·62	+ 0·64	+ 0·68	+ 0·58	+ 0·63
					1	·63	·66	·61	·63	·58	·63	·61	·58	·68	·68	·61	·61
					2	·64	·67	·67	·66	·61	·61	·65	·61	·56	·66	·64	·58
					3	·53	·62	·57	·56	·57	·67	·67	·54	·63	·61	·62	·71
					4	·58	·70	·67	·74	·75	·71	·75	·76	·78	·82	·65	·71
					5	·68	·71	·71	·77	·77	·85	·70	·71	·67	·73	·74	·77
					6	·73	·74	·67	·66	·61	·72	·67	·65	·64	·73	·73	·74
					7	·69	·76	·76	·77	·67	·82	·74	·74	·89	·80	·78	·87
					8	·82	·80	·82	·89	·79	·85	·74	·84	·71	·79	·75	·81
					9	·82*	·86*	·76*	·86*	·83*	·82*	·83*	·87*	·82*	·82*	·77*	·74*
30	90	150	210	270	330	+ 0·73*	+ 0·80*	+ 0·74*	+ 0·68*	+ 0·70*	+ 0·71*	+ 0·65*	+ 0·71*	+ 0·68*	+ 0·64*	+ 0·71*	+ 0·70*
					1	·75*	·68	·61	·71	·80	·68	·81	·75	·67	·74	·73	·78
					2	·65	·59	·62	·65	·71	·68	·62	·78	·64	·67	·71	·75
					3	·76	·64	·62	·73	·76	·79	·73	·68	·65	·65	·79	·76
					4	·80	·81	·82	·86	·83	·86	·75	·85	·87	·80	·82	·74
					5	·77	·82	·86	·69	·75	·70	·77	·73	·64	·62	·68	·64
					6	·64	·64	·73	·64	·75	·78	·74	·65	·67	·73	·69	·68
					7	·73	·67	·76	·77	·71	·71	·79	·67	·79	·79	·72	·71
					8	·64	·72	·67	·62	·65	·68	·59	·75	·70	·81	·74	·74
					9	·65	·68	·74	·72	·80	·65	·65	·64	·72	·61	·68	·59
40	100	160	220	280	340	+ 0·66	+ 0·55	+ 0·63	+ 0·55	+ 0·65	+ 0·58	+ 0·67	+ 0·65	+ 0·60	+ 0·59	+ 0·66	+0·58
					1	·51	·57	·49	·55	·52	·59	·51	·56	·48	·44	·55	·44
					2	·43	·46	·45	·46	·35	·28	·37	·41	·38	·34	·30	·35
					3	·34	·37	·43	·36	·33	·20	·20	·34	·27	·28	·33	·18
					4	·29	·14	·19	·23	·19	·19	·24	·22	·10	·06	·22	·22
					5	·25	·23	·23	·20	·20	·20	·29	·31	·26	·24	·31	·33
					6	·32	·35	·35	·35	·29	·21	·37	·29	·25	·22	·25	·24
					7	·29	·27	·31	·23	·30	·22	·25	·34	·20	·26	·35	·22
					8	·29	·21	·26	·26	·26	·28	·25	·31	·32	·36	·31	·30
					9	·33	·33	·32	·26	·35	·32	·32	·33	·29	·32	·25	·41
50	110	170	230	290	350	+ 0·35	+ 0·39	+ 0·30	+ 0·37	+ 0·32	+ 0·46	+ 0·41	+ 0·38	+ 0·37	+ 0·44	+ 0·38	+ 0·34
					1	·34	·31	·42	·30	·37	·49	·32	·26	·34	·38	·34	·34
					2	·35	·43	·41	·38	·44	·33	·42	·38	·41	·31	·33	·20
					3	·21	·28	·31	·28	·26	·28	·28	·26	·26	·26	·22	·16
					4	·17	·15	·11	·19	·12	·05	·07	·01	·01	·05	·07	·13
					5	·07	·10	·02	·10	·09	·16	·10	·09	·20	·17	·14	·26
					6	·20	·13	·23	·23	·18	·16	·12	·17	·19	·16	·14	·16
					7	·08	·20	·13	·05	·05	·09	·04	·16	·01	·02	·03	·15
					8	·14	·07	·16	·13	·10	·11	·20	·16	·05	·05	·02	·00
					9	·19*	·25*	·17*	·19*	·09*	·21*	·20*	·25*	·19*	·23*	·26*	·21*
60	120	180	240	300	360	+ 0·24*	+ 0·17*	+ 0·16*	+ 0·26*	+ 0·23*	+ 0·25*	+ 0·12*	+ 0·15*	+ 0·10*	+ 0·11*	+ 0·10*	+ 0·08*

Digitized by Google

Corrections for Division Error for Separate Diameters.

MOVEABLE CIRCLE.

Argument—Division Mark under Microscopes.

0°	+ 2″·20	30°	+ 1″·19	60°	+ 1″·80	90°	+ 1″·27	120°	+ 0″·69	150°	+ 0″·43
5	1·21	35	0·83	65	0·93	95	1·03	125	0·49	155	1·31
10	1·22	40	1·72	70	1·25	100	1·15	130	0·56	160	1·48
15	1·22	45	0·00	75	1·13	105	1·07	135	1·09	165	0·86
20	1·25	50	1·57	80	1·48	110	1·18	140	0·24	170	1·58
25	1·23	55	2·33	85	1·38	115	0·79	145	0·30	175	1·13

Corrections for Division Error for the Mean of Six Divisions.

MOVEABLE CIRCLE.

Argument—Division Marks under Microscopes.

0°, 60°, 120°, 180°, 240°, 300°	+0″·92	20°, 80°, 140°, 200°, 260°, 320°	+0″·35	40°, 100°, 160°, 220°, 280°, 340°	+0″·82
1, 61, 121, 181, 241, 301	·72	21, 81, 141, 201, 261, 321	·31	41, 101, 161, 221, 281, 341	·92
2, 62, 122, 182, 242, 302	·67	22, 82, 142, 202, 262, 322	·44	42, 102, 162, 222, 282, 342	·96
3, 63, 123, 183, 243, 303	·61	23, 83, 143, 203, 263, 323	·36	43, 103, 163, 223, 283, 343	1·00
4, 64, 124, 184, 244, 304	·41	24, 84, 144, 204, 264, 324	·50	44, 104, 164, 224, 284, 344	0·31
5, 65, 125, 185, 245, 305	·23	25, 85, 145, 205, 265, 325	·33	45, 105, 165, 225, 285, 345	·00
6, 66, 126, 186, 246, 306	·29	26, 86, 146, 206, 266, 326	·32	46, 106, 166, 226, 286, 346	·26
7, 67, 127, 187, 247, 307	·26	27, 87, 147, 207, 267, 327	·23	47, 107, 167, 227, 287, 347	·20
8, 68, 128, 188, 248, 308	·24	28, 88, 148, 208, 268, 328	·26	48, 108, 168, 228, 288, 348	·49
9, 69, 129, 189, 249, 309	·29	29, 89, 149, 209, 269, 329	·35	49, 109, 169, 229, 289, 349	·76
10, 70, 130, 190, 250, 310	·37	30, 90, 150, 210, 270, 330	·32	50, 110, 170, 230, 290, 350	·80
11, 71, 131, 191, 251, 311	·35	31, 91, 151, 211, 271, 331	·49	51, 111, 171, 231, 291, 351	·78
12, 72, 132, 192, 252, 312	·50	32, 92, 152, 212, 272, 332	·42	52, 112, 172, 232, 292, 352	·53
13, 73, 133, 193, 253, 313	·58	33, 93, 153, 213, 273, 333	·40	53, 113, 173, 233, 293, 353	·47
14, 74, 134, 194, 254, 314	·54	34, 94, 154, 214, 274, 334	·50	54, 114, 174, 234, 294, 354	·62
15, 75, 135, 195, 255, 315	·50	35, 95, 155, 215, 275, 335	·41	55, 115, 175, 235, 295, 355	·77
16, 76, 136, 196, 256, 316	·40	36, 96, 156, 216, 276, 336	·44	56, 116, 176, 236, 296, 356	·78
17, 77, 137, 197, 257, 317	·20	37, 97, 157, 217, 277, 337	·57	57, 117, 177, 237, 297, 357	·91
18, 78, 138, 198, 258, 318	·26	38, 98, 158, 218, 278, 338	·68	58, 118, 178, 238, 298, 358	·86
19, 79, 139, 199, 259, 319	·31	39, 99, 159, 219, 279, 339	·83	59, 119, 179, 239, 299, 359	·84

FLEXURE OF CIRCLES.

In the course of the above investigations it became evident that, in respect to the fixed circle at least, the results of the division-error investigations taken in positions of the circle differing by 180° exhibited discordances such as might be attributable to a flexure of the circle in its own plane. The investigations were accordingly conducted in such a manner throughout as to eliminate such an error if it existed, by repetition of all operations in opposite positions of the circle, while the flexure itself was made the subject of an independent series of investigations subsequently.

For the purpose of investigating the flexure, comparisons were made between the readings of the fixed and of the moveable circles in the following manner. The moveable circle was first securely clamped to the axis, and both circles read in a variety of settings. The moveable circle was then rotated through 180° on the axis and again clamped, and the circles again read in corresponding positions. A few preliminary experimental readings were taken—

(1) To test the action of the clamp and slow motion;

(2) To test whether the rotation of the instrument involved any sensible torsion of the axis, as follows:—

(1) The circle was set so that the pointer reading was approximately 30°, and clamped. It was then moved slightly by motions of the slow-motion screw, the handle being turned successively in the directions right—left—left—right, and both circles were read after each setting.

The same operations were then repeated with the pointer reading approximately 90°, 150°, 210°, 270°, 330°. As the result of four such sets of operations taken on four successive days the following differences in the

Digitized by Google

indications of the two circles as affected by the direction of motion were obtained, in the sense "excess of reading of moveable circle over that of fixed (motion right—motion left)."

Pointer.	Set I.	Set II.	Set III.	Set IV.
	r	r	r	r
30°	− 0·0008	− 0·0002	+ 0·0034	− 0·0011
90	+ 10	+ 11	− 18	+ 26
150	− 4	+ 25	− 14	− 16
210	+ 13	+ 9	− 7	+ 23
270	+ 3	+ 55	− 2	− 19
330	+ 17	− 23	− 3	+ 3
	+ 0·0005	+ 0·0012	− 0·0002	+ 0·0001

The differences, amounting in the mean to $+0^{r}\cdot0004$, appear to be sufficiently small and accidentally distributed.

(2) A similar series of readings was taken, the instrument being brought into position between each reading by rotating it on its axis through a complete revolution at least, the final motion always being made with the slow-motion screw after clamping. The following were the mean differences in the excess of the reading of the moveable circle over that of the fixed, depending on the direction of final rotation in the sense "forward—backward."

Pointer.	Set I.	Set II.	Set III.	Set IV.
	r	r	r	r
30°	+ 0·0039	+ 0·0020	− 0·0028	− 0·0004
90	− 1	− 4	+ 13	− 1
150	− 20	− 50	− 4	− 10
210	− 33	− 26	− 28	− 44
270	− 15	− 25	− 39	− 17
330	− 31	− 8	+ 7	+ 5
	− 0·0010	− 0·0016	− 0·0013	− 0·0012

There would thus appear to be a slight torsion of the axis depending on the direction of final rotation. Moreover, since the "forward" direction of motion corresponds with that due to "slow-motion screw left," this torsion agrees in sign with that indicated from the operations in which the motion was produced by the slow motion alone. Consequently, a new series of pointings of a like character was made, in which the instrument was rotated through 360° at least between each pointing and brought into its final position without the aid of the clamp and slow motion—except during the first set, in which the slow motion was used to bring the circle into position, but the clamp released before the readings were taken. During the remaining three sets the clamp and slow motion were not used. In this manner were obtained the following results for the differences in the excess of the reading of the moveable circle over that of the fixed :—

Pointer.	Set I.	Set II.	Set III.	Set IV.
	r	r	r	r
30°	+ 0·0010	− 0·0027	− 0·0013	− 0·0005
90	− 26	+ 44	− 6	+ 31
150	− 2	− 34	− 33	+ 44
210	− 10	+ 45	+ 31	− 7
270	− 26	− 11	− 12	+ 8
330	0	− 2	− 12	+ 30
	− 0·0009	+ 0·0002	− 0·0008	+ 0·0017

The anomalies that presented themselves hitherto seem now to have disappeared, and in consequence the subsequent operations were always conducted without the aid of the clamp and slow-motion screw.

Let now f denote the amount by which the reading of the fixed circle as read by six microscopes is too large on account of flexure of the circle. Then f will be a periodic function of the pointer reading of the fixed circle, which, if the flexure be purely gravitational, will be reversed in sign where the pointer reading is increased by 180°.

Likewise, if m be the amount by which the moveable circle reads too large, m will be a similar function of the pointer reading of the moveable circle.

Digitized by Google

Let, now, the moveable circle be clamped to the axis so that the pointer readings differ in the mean (*i.e.* apart from flexure and division error) by a small unknown amount P, and let a number of readings F, M of the fixed and moveable circles be taken, say, on division marks x, $x+60°$, etc.

Then we have

$$F_x - M_x = P + f_x - m_x + d_x,$$

where d_x denotes the mean correction for division error due to the difference in the division errors of the marks x. $x+60°$ . . . . , on the two circles.

On rotating the instrument through 180°, since

$$f_{x+180°} = -f_x,\ m_{x+180°} = -m_x,\ \text{and}\ d_{x+180°} = d_x,$$

we find

$$F_{x+180°} - M_{x+180°} = P - f_x + m_x + d_x,$$

whence, eliminating P, we find

$$f_x - m_x = \tfrac{1}{2}(F_x - M_x - F_{x+180°} + M_{x+180°}) = A,\ \text{say} \quad . \quad . \quad . \quad . \quad . \quad . \quad . \quad . \quad . \quad . \quad . \quad . \quad (1),$$

from which $f_x - m_x$ may be derived independently of the division errors of the circles.

Next, let the moveable circle be rotated on the axis through 180° and clamped so that its pointer reading differs from that of the fixed circle by an amount 180° + P′, where P′ is a small unknown quantity; then, by taking readings as before, we find—

$$F'_x - M'_{x+180°} = 180° + P' + f_x - m_{x+180°} + d_x,$$
$$F'_{x+180°} - M'_x = 180° + P' - f_x + m_{x+180°} + d_x,$$

whence, eliminating P′ and with it d_x,

$$f_x - m_{x+180°} = \tfrac{1}{2}[F'_x - M'_{x+180°} - F'_{x+180°} + M'_x],$$

or, since $m_{x+180°} = -m_x$,

$$f_x + m_x = \tfrac{1}{2}[F'_x - M'_{x+180°} - F'_{x+180°} + M'_x] = B,\ \text{say} \quad . \quad . \quad . \quad . \quad . \quad . \quad . \quad . \quad . \quad . \quad . \quad . \quad (2).$$

Finally, combining (1) and (2), we find

$$f_x = \tfrac{1}{2}(A + B),$$
$$m_x = -\tfrac{1}{2}(A - B).$$

The operations were conducted in the following manner. The moveable circle was first adjusted so that its zero reading corresponded with that of the fixed circle and the division marks 0°, 60°, 120°, 180°, 240°, 300° were brought in succession under the pointer, and both circles were read. In order to eliminate any progressive changes in the microscopes, the same operations were then repeated in reversed order of measurement. Such a series of operations constituted a set. A complete series involved twelve such sets commencing with 5°, 10°, etc.

A second series of observations was then made with the moveable circle rotated through 180° on its axis, a third series was an exact repetition of the second, and a fourth of the first, the moveable circle being again rotated on the axis between the third and fourth series.

From the first and fourth series we derive the quantities A, *i.e.* $f_x - m_x$, and from the second and third series the quantities B, *i.e.* $f_x + m_x$; and from their combination the quantities f, m, as follows:—

Pointer.	A.	B.	f.	m.	Pointer.	A.	B.	f.	m.
°	″	″	″	″	°	″	″	″	″
0	− 0·02	− 0·06	− 0·04	− 0·02	90	+ 0·04	+ 0·03	+ 0·03	− 0·01
5	− ·21	+ ·08	− ·07	+ ·15	95	+ ·03	+ ·06	+ ·05	+ ·01
10	− ·09	+ ·05	− ·02	+ ·07	100	+ ·09	+ ·02	+ ·06	− ·04
15	+ ·01	− ·04	− ·01	− ·02	105	+ ·15	+ ·07	+ ·11	− ·04
20	− ·12	− ·12	− ·12	·00	110	+ ·12	+ ·21	+ ·16	+ ·05
25	− ·02	+ ·11	+ ·04	+ ·06	115	+ ·17	+ ·24	+ ·21	+ ·04
30	− ·08	− ·15	− ·12	− ·04	120	+ ·16	+ ·10	+ ·13	− ·03
35	− ·05	− ·01	− ·03	+ ·02	125	+ ·12	+ ·31	+ ·21	+ ·10
40	− ·08	− ·09	− ·08	·00	130	+ ·10	+ ·07	+ ·08	− ·02
45	− ·03	+ ·01	− ·01	+ ·02	135	+ ·07	+ ·06	+ ·06	− ·01
50	+ ·13	− ·02	+ ·06	− ·08	140	+ ·02	+ ·06	+ ·04	+ ·02
55	+ ·04	+ ·14	+ ·09	+ ·05	145	+ ·21	+ ·20	+ ·20	− ·01
60	+ ·07	+ ·19	+ ·13	+ ·06	150	+ ·04	+ ·05	+ ·04	+ ·01
65	+ ·03	+ ·08	+ ·05	+ ·03	155	+ ·09	+ ·17	+ ·13	+ ·04
70	+ ·08	+ ·05	+ ·06	− ·01	160	+ ·14	+ ·20	+ ·17	+ ·03
75	+ ·08	+ ·08	+ ·08	·00	165	+ ·05	+ ·02	+ ·04	− ·02
80	+ ·04	+ ·04	+ ·04	·00	170	− ·05	+ ·13	+ ·04	+ ·09
85	+ ·09	+ ·16	+ ·12	+ ·04	175	+ ·11	+ ·21	+ ·16	+ ·05

Digitized by Google

It will be at once noticed that the quantities f are not only generally larger than the quantities m, but also, while the latter appear to be accidentally distributed, the former follow a pronounced systematic law. By way of verification the whole series of operations was later repeated with the following results :—

Pointer.	A.	B.	f.	m.	Pointer.	A.	B.	f.	m.
°	″	″	″	″	°	″	″	″	″
0	− 0·04	+ 0·02	− 0·01	+ 0·03	90	+ 0·10	+ 0·02	+ 0·06	− 0·04
5	− ·19	− ·11	− ·15	+ ·04	95	+ ·12	+ ·12	+ ·12	·00
10	− ·06	− ·11	− ·08	− ·03	100	+ ·14	+ ·04	+ ·09	− ·05
15	− ·06	− ·13	− ·09	− ·04	105	+ ·14	+ ·11	+ ·12	− ·02
20	− ·11	− ·20	− ·15	− ·05	110	+ ·17	+ ·17	+ ·17	·00
25	− ·09	− ·17	− ·13	− ·04	115	+ ·16	+ ·14	+ ·15	− ·01
30	− ·18	− ·13	− ·15	+ ·02	120	+ ·08	+ ·07	+ ·07	− ·01
35	− ·06	− ·11	− ·09	− ·02	125	+ ·18	+ ·06	+ ·12	− ·06
40	− ·07	− ·18	− ·12	− ·06	130	+ ·10	+ ·08	+ ·09	− ·01
45	− ·12	− ·26	− ·18	− ·07	135	+ ·08	+ ·19	+ ·13	+ ·05
50	+ ·02	− ·07	− ·03	− ·05	140	− ·01	+ ·08	+ ·03	+ ·04
55	+ ·03	+ ·11	+ ·06	+ ·04	145	+ ·21	+ ·17	+ ·19	− ·02
60	+ ·03	+ ·01	+ ·02	− ·01	150	+ ·13	+ ·11	+ ·12	− ·01
65	+ ·08	+ ·02	+ ·05	− ·03	155	+ ·13	+ ·06	+ ·09	− ·04
70	+ ·10	+ ·01	+ ·06	− ·05	160	+ ·25	+ ·14	+ ·19	− ·05
75	+ ·06	+ ·10	+ ·08	+ ·02	165	+ ·12	− ·06	+ ·03	− ·09
80	+ ·03	·00	+ ·01	− ·02	170	+ ·04	+ ·15	+ ·09	+ ·05
85	+ ·14	+ ·18	+ ·16	+ ·02	175	+ ·11	+ ·10	+ ·10	− ·01

Each of the quantities f, m is derived in each set with the equivalent weight of twenty-four micrometer pointings, and from the mean of the two series with the equivalent weight of forty-eight pointings. If we equate the mean results for the value of f from the two series of observations to the expression

$$a \cos z + b \sin z,$$

where z denotes the zenith distance of the telescope, and solve by least squares for the determination of a, b, we find

$$a = -0''{\cdot}100,\ b = +0''{\cdot}083,$$

and the probable accidental error of a single equation is found to be

$$\pm 0''{\cdot}035.$$

Remembering that each equation has weight 48 compared with that of a single micrometer pointing, the resulting value of the probable accidental error of the latter is found to be

$$\pm 0''{\cdot}24.$$

The result of the determinations for the moveable circle is even more satisfactory ; if we regard the actual values derived as solely the results of uneliminated accidental errors, the square root of the mean of their squares amounts only to $\pm 0''{\cdot}034$, and the corresponding derived value of the probable accidental error of a single pointing is

$$\pm 0''{\cdot}15.$$

The final results of the flexure investigations—where O represents the values derived directly from the observations, and C the values computed from the formula

$$-0''{\cdot}100 \cos z + 0''{\cdot}083 \sin z$$

for the fixed circle, and O − C the corresponding residuals for the fixed circle only—are given in the following table :—

Final Results of Flexure Determinations.

Pointer.	O. Moveable Circle.	O. Fixed Circle.	C. Fixed Circle.	O—C.	Pointer.	O. Moveable Circle.	O. Fixed Circle.	C. Fixed Circle.	O—C.
°	″	″	″	″	°	′	″	″	″
0	+ 0·01	− 0·03	− 0·10	+ 0·07	90	− 0·03	+ 0·05	+ 0·08	− ·03
5	+ ·10	− ·11	− ·09	− ·02	95	+ ·01	+ ·09	+ ·09	·00
10	+ ·02	− ·05	− ·09	+ ·04	100	− ·05	+ ·08	+ ·10	− ·02
15	− ·03	− ·05	− ·08	+ ·03	105	− ·03	+ ·12	+ ·11	+ ·01
20	− ·03	− ·14	− ·07	− ·07	110	+ ·03	+ ·17	+ ·11	+ ·06
25	+ ·01	− ·05	− ·06	+ ·01	115	+ ·02	+ ·18	+ ·12	+ ·06
30	− ·01	− ·14	− ·05	− ·09	120	− ·02	+ ·10	+ ·12	− ·02
35	·00	− ·06	− ·03	− ·03	125	+ ·02	+ ·17	+ ·13	+ ·04
40	− ·03	− ·10	− ·02	− ·08	130	− ·02	+ ·09	+ ·13	− ·04
45	− ·03	− ·10	− ·01	− ·09	135	+ ·02	+ ·10	+ ·13	− ·03
50	− ·07	+ ·02	·00	+ ·02	140	+ ·03	+ ·04	+ ·13	− ·09
55	+ ·05	+ ·08	+ ·01	+ ·07	145	− ·02	+ ·20	+ ·13	+ ·07
60	+ ·03	+ ·08	+ ·02	+ ·06	150	·00	+ ·08	+ ·13	− ·05
65	·00	+ ·05	+ ·03	+ ·02	155	·00	+ ·11	+ ·13	− ·02
70	− ·03	+ ·06	+ ·04	+ ·02	160	− ·01	+ ·18	+ ·12	+ ·06
75	+ ·01	+ ·08	+ ·05	+ ·03	165	− ·06	+ ·04	+ ·12	− ·08
80	− ·01	+ ·03	+ ·06	− ·03	170	+ ·07	+ ·07	+ ·11	− ·04
85	+ ·03	+ ·14	+ ·07	+ ·07	175	+ ·02	+ ·13	+ ·11	+ ·02

Digitized by Google

Comparison between the Two Circles.

As a final verification of the whole series of investigations, the telescope was set in a series of zenith distances differing approximately by 36°, and the two circles were read by different observers, in each case with the aid of the six primary microscopes. To eliminate progressive changes, the operations were first repeated in reversed order, and subsequently the whole process again repeated by two other observers. Three such series of observation were made, starting at 0°, 12°, 24° respectively.

The derived values for the mean differences of the zero readings of the fixed and moveable circles were as follows:—

Pointer.	M - F. Uncorrected.	M - F. Corrected for Division Errors.	M - F. Corrected for Division Errors and Flexure of Fixed Circle.	Pointer.	M - F. Uncorrected.	M - F. Corrected for Division Errors.	M - F. Corrected for Division Errors and Flexure of Fixed Circle.
°	″	″	″	°	″	″	″
0	26·44	26·06	25·96	192	25·53	26·06	26·14
36	26·22	26·26	26·23	228	26·31	25·85	25·85
72	25·63	26·16	26·20	264	25·88	26·32	26·25
108	26·18	25·72	25·83	300	26·70	26·32	26·20
144	25·34	25·78	25·90	336	26·35	26·39	26·27
180	26·32	25·94	26·04				
216	26·06	26·10	26·13	24	25·83	26·27	26·22
252	25·72	26·25	26·21	60	26·60	26·22	26·24
288	26·44	25·98	25·87	96	26·19	26·23	26·32
324	26·02	26·46	26·34	132	25·48	26·01	26·13
				168	26·42	25·96	26·07
12	25·65	26·18	26·10	204	25·72	26·16	26·21
48	26·48	26·02	26·02	240	26·80	26·42	26·40
84	25·56	26·00	26·07	276	26·50	26·54	26·45
120	26·38	26·00	26·12	312	25·89	26·42	26·30
156	26·12	26·16	26·28	348	26·71	26·25	26·14

The discordances from the mean in each group are given by the following table:—

Residuals $(O-C)$.

Pointer.	I.	II.	III.	Pointer.	I.	II.	III.
°	″	″	″	°	″	″	″
0	+ 0·40	− 0·01	− 0·11	192	− ·57	− ·07	+ ·01
36	+ ·18	+ ·19	+ ·16	228	+ ·21	− ·28	− ·28
72	− ·41	+ ·09	+ ·13	264	− ·22	+ ·19	+ ·12
108	+ ·14	− ·35	− ·24	300	+ ·60	+ ·19	+ ·07
144	− ·70	− ·29	− ·17	336	+ ·25	+ ·26	+ ·14
180	+ ·28	− ·13	− ·03				
216	+ ·02	+ ·03	+ ·06	24	− 0·38	+ 0·02	− 0·03
252	− ·32	+ ·18	+ ·14	60	+ ·39	− ·03	− ·01
288	+ ·40	− ·09	− ·20	96	− ·02	− ·02	+ ·07
324	− ·02	+ ·39	+ ·27	132	− ·73	− ·24	− ·12
				168	+ ·21	− ·29	− ·18
12	− 0·45	+ 0·05	− 0·03	204	− ·49	− ·09	− ·04
48	+ ·38	− ·11	− ·11	240	+ ·59	+ ·17	+ ·15
84	− ·54	− ·13	− ·06	276	+ ·29	+ ·29	+ ·20
120	+ ·28	− ·13	− ·01	312	− ·32	+ ·17	+ ·05
156	+ ·02	+ ·03	+ ·15	348	+ ·50	·00	− ·11

Column I. contains the residuals from the uncorrected observations, and the sum of their squares is 4·6675.

Column II. contains the residuals after correction for division errors in accordance with the tables of § 12, and the sum of their squares is 1·0271.

Column III. contains the residuals after the readings of the fixed circle have been further corrected by an amount

$$+0''\cdot100\cos z - 0''\cdot083\sin z,$$

due to flexure of the circle in its own plane; the sum of their squares is ·5661.

Thus the square of the mean error of a single entry in this table is ·0210, and the corresponding probable error $\pm0''\cdot097$.

But each entry results from the difference between the mean of four readings on the moveable circle and the mean of four readings on the fixed circle, each reading involving the mean of the six microscopes. Regarding a single reading as of unit weight, the weight of a single entry will therefore be 2, and the resulting value of the probable error of a single reading of either circle, including accidental error of pointing and outstanding errors in the determination of errors of graduation, flexure, etc., is

$$\pm0''\cdot137.$$

Digitized by Google

APPENDIX TO PART III.

THE STABILITY OF THE AZIMUTH MARKS.

SINCE the preceding pages were written, Mr S. S. Hough has kindly furnished me with the separate results of the determinations of Azimuth of the Meridian marks made during the year 1908.

The Transit Circle is reversed every Monday morning, so that during one week the observations are made in the position "Clamp East" and during the following week in the position "Clamp West."

As a rule, on each night transits of from two to four of the stars of the Cape list of 24 Southern Circumpolars have been observed, and the Azimuth of the instrument has been computed from these observations by employing the places and proper motions of these stars as derived in Appendix III. of the Cape Catalogue for 1890.

The adopted reading for geometric collimation is derived from the observations made within the week itself, partly from the micrometer readings for coincidence of the reflex and direct images of the wires when the instrument is directed to the Nadir before and after reversal of the axis on each Monday morning, and partly from observations of the circles of the north and south collimators after these have been previously adjusted to coincidence.

TABLE I.—SEPARATE AZIMUTHS OF THE NORTH AND SOUTH MARKS.

1908 Jan. 3 to Jan. 31.

Clamp E.		Clamp W.	
N. s	S. s	N. s	S. s
+0·932	+0·626	+0·936	+0·622
·930	·628	·931	·627
·925	·633	·919	·639
·926	·632	·901	·657
·912	·646	·920	·638
·928	·630	·926	·632
·923	·635	...	...
+0·925	+0·633	+0·922	+0·636

1908 Feb. 1 to Feb. 26.

+0·896	+0·632	+0·914	+0·614
·895	·633	·905	·623
·902	·626	·913	·615
·907	·621	·901	·627
·910	·618	·897	·631
·903	·625	·905	·623
·910	·618	·904	·624
·913	·615	·901	·627
·919	·609	·892	·636
·900	·628	...	...
·936	·592	...	...
·920	·608	...	...
·908	·620	...	...
+0·909	+0·619	+0·904	+0·624

1908 Feb. 29 to May 1.

+0·927	+0·603	+0·909	+0·621
·902	·628	·905	·625
·899	·631	·904	·626
·913	·617	·899	·631
·914	·616	·916	·614
·903	·627	·898	·632
·918	·612	·895	·635

1908 Feb. 29 to May 1.—*contd.*

Clamp E.		Clamp W.	
N. s	S. s	N. s	S. s
+0·904	+0·626	+0·890	+0·640
·900	·630	·909	·621
·904	·626	·887	·643
·917	·613	·891	·639
·927	·603	·895	·635
·931	·599	·914	·616
...	...	·896	·634
...	...	·886	·644
...	...	·887	·643
+0·912	+0·618	+0·899	+0·631

1908 May 2 to May 27.

+0·912	+0·624	+0·894	+0·642
·919	·617	·898	·638
·920	·616	·895	·641
·936	·600	·894	·642
·919	·617	...	...
·909	·627	...	...
·935	·601	...	...
·938	·598	...	...
·918	·618	...	...
+0·923	+0·613	+0·895	+0·641

1908 June 5 to June 30.

+0·898	+0·610	+0·882	+0·626
·913	·595	·884	·624
·883	·625	·890	·618
·885	·623	·905	·603
·899	·609	·899	·609
·890	·618	·890	·618
...	...	·908	·600
...	...	·881	·627
+0·895	+0·613	+0·892	+0·616

1908 July 2 to July 31.

Clamp E.		Clamp W.	
N. s	S. s	N. s	S. s
+0·862	+0·634	+0·878	+0·618
·878	·618	·899	·597
·888	·608	·883	·613
·863	·633	·885	·611
·891	·605	·881	·615
·880	·616	·896	·600
·886	·610	·900	·596
·890	·606	·915	·581
+0·880	+0·616	+0·892	+0·604

1908 Aug. 4 to Aug. 22.

+0·893	+0·617	+0·887	+0·623
·900	·610	·876	·634
·899	·611	·890	·620
·904	·606	·886	·624
·918	·592	·898	·612
...	...	·889	·621
...	...	·874	·636
+0·903	+0·607	+0·886	+0·624

1908 Sept. 7 to Oct. 2.

+0·887	+0·621	+0·897	+0·611
·886	·622	·901	·607
·902	·606	·901	·607
·907	·601	·899	·609
·899	·609	·910	·598
·882	·626	·899	·609
·893	·615	·892	·616
·883	·625	...	...
·894	·614	...	...
+0·893	+0·615	+0·900	+0·608

1908 Oct. 3 to Nov. 27.

Clamp E.		Clamp W.	
N. s	S. s	N. s	S. s
+0·895	+0·613	+0·896	+0·612
·909	·599	·901	·607
·899	·609	·890	·618
·898	·610	·894	·614
·890	·618	·905	·603
·902	·606	·886	·622
·895	·613	·911	·597
·887	·621	·914	·594
·900	·608	·904	·604
·903	·605	·907	·601
·901	·607	·902	·606
·901	·607	·910	·598
...	...	·894	·614
...	...	·904	·604
...	...	·880	·628
...	...	·901	·607
+0·898	+0·610	+0·900	+0·608

1908 Nov. 30 to 1909 Jan. 12.

+0·908	+0·608	+0·913	+0·603
·899	·617	·917	·599
·899	·617	·894	·622
·923	·593	·911	·605
·918	·598	·910	·606
·925	·591	·928	·588
·893	·623	·918	·598
·909	·607	·913	·603
·887	·629	·891	·625
·912	·604	·901	·615
·916	·600	·904	·612
...	...	·902	·614
...	...	·885	·631
...	...	·904	·612
+0·908	+0·608	+0·906	+0·609

Digitized by Google

The Level error is determined, before and after each set of star observations, by Nadir readings for the coincidence of the direct and reflex images of the wires, the reading for geometric collimation being known. When necessary, the Level error is interpolated for the transit of each star.

Previous to each night's work, the long-focus lenses (by which the Azimuth marks are viewed), as well as the marks themselves, are adjusted vertically over the optical centres of the object-glasses at the bottom of their corresponding pits, by moving the screw 8 (Plate XVI.) till the telescope 9 attached to each long-focus lens and each mark shows the image of the small bright disc bisected by the wire (see also pp. 40 and 47).

The north and south Azimuth marks are, as a rule, observed at the beginning, middle, and end of each night's work, in order to determine the change of Azimuth during the observations—a change which is quite sensible and fairly systematic. A correction for this change is first applied to the time of transit of each circumpolar star, and the Azimuth of the instrument, at the epoch of each observation of the marks, is computed from the observations of the circumpolar stars,—whence the mean Azimuth of both marks is derived.

The resulting Azimuths of the marks for each night of observation are given in Table I., p. 115.

The very close accordance of these independent results may be regarded as a striking testimony to the stability of the marks. Not only so, but, having regard to the fact that different circumpolar stars at upper and lower culmination are used on different nights, it becomes evident that the tabular places of these stars are not far from the truth. It is also evident that the observed differences in the Azimuths of the marks on successive nights are considerably greater than any real changes in the Azimuths of the underground marks themselves, and that, for groups of observations made during a month or more, the true Azimuths of the marks may be regarded as constant. This is shown conclusively in the following Table:—

TABLE II.—Mean Azimuths of the North and South Marks.

Group.	Clamp E.		Clamp W.		$\frac{N+S}{2}$.
	N.	S.	N.	S.	
1908 January 3 to January 31	+ 0ˢ·925	+ 0ˢ·633	+ 0ˢ·922	+ 0ˢ·636	+ 0ˢ·779
1908 February 1 to February 26	·909	·619	·904	·624	·764
1908 February 29 to May 1	·912	·618	·899	·631	·765
1908 May 2 to May 27	·923	·613	·895	·641	·768
1908 June 5 to June 30	·895	·613	·892	·616	·754
1908 July 2 to July 31	·880	·616	·892	·604	·748
1908 August 4 to August 22	·903	·607	·886	·624	·755
1908 September 7 to October 2	·893	·615	·900	·608	·754
1908 October 3 to November 27	·898	·610	·900	·608	·754
1908 November 30 to 1909 January 12 . . .	+ ·908	+ ·608	+ ·906	+ ·609	·758

For the definite reduction of each separate transit the Azimuth of the Transit Circle is therefore interpolated solely from the observations of the Meridian marks, assuming the above value of $\frac{N+S}{2}$ of Table II. as constant throughout each group. In this way not only are the results freed from the effect of hourly changes in the Azimuth of the instrument, but the accidental error of the observed Azimuth is largely diminished. Also, since a considerable number of different circumpolar stars are observed during each period—some at upper, some at lower transit—valuable corrections to the accidental errors of their tabular places may in this way be obtained. The observed values of $\frac{N+S}{2}$ show a small progressive and periodic change which may have its origin in one or all of the following causes:—

(1) A change in the positions of the underground marks, due to shifting of the bed of rock to which they are attached.

(2) A change in the axis about which the earth rotates,—in fact, a direct result of the known "change of Latitude."

(3) Small systematic errors in the adopted tabular places of the 24 Southern Circumpolar stars.

A complete discussion of all these points would only be possible after a long special series of observations, including a large number of double transits of circumpolar stars. But it does not appear that the underground marks can be regarded as absolutely rigid relative to a plane passing through one of them and through the earth's mean axis of rotation, otherwise the relative Azimuths of the north and south marks to each other would be constant.

Thus we have in Columns 1 and 2 of the following table the separate mean Azimuths of the north and south mark, and these Azimuths, in consequence of the weekly reversals of the instrument, may be regarded as free from errors of Collimation.

Digitized by Google

Group.	Inclusive Dates.	Azimuth of North Mark.	Azimuth of South Mark.	N.—S.
I.	1908 January 3 to January 31	+ 0s·923	+ 0s·634	+ 0s·289
II.	1908 February 1 to February 26	·906	·621	·285
III.	1908 February 29 to May 1	·905	·624	·281
IV.	1908 May 2 to May 27	·909	·627	·282
V.	1908 June 5 to June 30	·893	·614	·279
VI.	1908 July 2 to July 31	·886	·610	·276
VII.	1908 August 4 to August 22	·894	·615	·279
VIII.	1908 September 7 to October 2	·896	·611	·285
IX.	1908 October 3 to November 27	·899	·609	·290
X.	1908 November 30 to 1909 January 12	+ 0·907	+ 0·608	+ 0·298

The north mark shows a small annual periodic change of Azimuth, whilst the south mark has a small progressive one, and these different changes cannot be explained by errors of the astronomical determinations. The difference of Azimuth between the marks (N. – S.), given above, shows a very minute but well-marked annual period, the determination of which is entirely independent of the astronomical observations. It cannot therefore be assumed that the Azimuth of the marks is absolutely constant, or even that the N. and S. marks are absolutely invariable with respect to each other. But it is certainly safe to assume that for periods like one month the mean Azimuth of the two marks may be regarded as constant, and this will be true far within the accidental errors of the Azimuth determination of a single night, and may be employed in this way for determination of the instantaneous Azimuth of the Transit Circle.

It is now of interest to inquire what has been the gain in stability of the marks by placing the object-glasses, whose optical centres form the points of reference, at considerable depths below the surface of the ground.

It will be remembered that both marks, and both the long-focus lenses (through which the marks are viewed), are mounted upon slides, to which scales and microscopes are attached. Thus the movements of the slides which are requisite to bring either mark, or the optical centre of either of the long-focus lenses, vertically over the optical centre of its corresponding underground object-glass, can be recorded to ±0·01 mm.

These scale readings are recorded every night after each adjustment. The means of these readings during each group are given in the following table, together with the equivalent change of Azimuth from mean for the marks above and below ground:—

Group.	Means of Scale Readings.				Corresponding difference from Mean Azimuth of the Year.*			
	N. Mark.	N. Lens.	S. Lens.	S. Mark.	Above Ground.		Below Ground.	
	mm.	mm.	mm.	mm.	N.	S.	N.	S.
I.	18·45	10·26	26·54	25·14	+0s·006	−0s·029	+0s·021	+0s·017
II.	·45	·09	·55	·17	+ ·032	− ·033	+ ·004	+ ·004
III.	·51	9·92	·61	·28	+ ·047	− ·042	+ ·003	+ ·007
IV.	·53	10·07	·64	·30	+ ·023	− ·040	+ ·007	+ ·010
V.	·51	·16	·65	25·08	+ ·012	+ ·004	− ·009	− ·003
VI.	·52	·35	·63	24·90	− ·018	+ ·035	− ·016	− ·007
VII.	·51	·47	·62	·89	− ·035	+ ·035	− ·008	− ·002
VIII.	·53	·52	·58	·88	− ·046	+ ·029	− ·006	− ·006
IX.	·43	·45	·57	·88	− ·020	+ ·027	− ·003	− ·008
X.	·43	10·29	·52	·91	+ ·005	+ ·012	+ ·005	− ·008

* Scale readings increase when N. mark is moved towards the West.
" " N. lens " " East.
" " S. lens " " West.
" " S. mark " " West.
1 mm. on Scale for N. mark and lens = 0s·153.
1 " " S. " = 0s·192.

If for the moment we regard the differences from the mean Azimuth of the year as errors, then the *mean error* of an Azimuth of the marks as produced by shift will be—

	N	S
In the case of the above-ground marks	± 0s·030	± 0s·032
" " underground marks	± 0·010	± 0·009

The stability of the underground marks is therefore three times as great as that of the above-ground ones, and they are certainly absolutely free from diurnal change and nearly so from sensible change during periods of a month at a time.

Digitized by Google

Digitized by Google

PART IV.

THE ASTROGRAPHIC TELESCOPE

AND OBSERVATORY.

Digitized by Google

PART IV.

THE ASTROGRAPHIC TELESCOPE

AND OBSERVATORY.

THE ASTROGRAPHIC TELESCOPE.

THIS telescope, as well as the seventeen or eighteen instruments of similar optical power now engaged on the international scheme of astrographic work for the whole sky, was the direct outcome of the Congress of Astronomers held at Paris in 1887.

The funds for the Greenwich and Cape Instruments were sanctioned by H.M. Treasury upon the recommendation of the Lords Commissioners of the Admiralty on the 30th August 1888. In previous discussions with Sir Howard Grubb the general plan of the mounting had been provisionally arranged, so that it became possible for him to commence construction without much preliminary delay.

The conditions arranged at the Conference were that the principal object-glass should be similar in aperture and focal length to that with which the Messrs Henry had made the beautiful photographs which induced Admiral Mouchez, on my suggestion, to summon the Conference—viz. the aperture to be 13 inches, the focal length 11 feet 3 inches—giving an image on the scale of 1 mm. = 1′.

The achromatism was to be corrected so as to give a minimum focus for rays of the refrangibility of Hγ.

In all other respects the various astronomers were at liberty to adapt their instruments to the work in hand in accordance with their individual judgment.

For the guiding telescope it was determined to employ an aperture of 10 inches, that aperture being considered necessary for easy and accurate following of the "guiding stars," which in some cases were not brighter than $9\frac{1}{2}$ magnitude; also, as a matter of convenience, both object-glasses should have the same focal length.

There should be a cast-iron piece for attachment to the head of the Declination Axis, and this should form the central part of the tubes of both telescopes. The extremities of both tubes to be bolted through flanges to this central piece, and both tubes to be united at their extremities by cast-iron pieces, which at one end carry the cells of the object-glasses, and at the other the camera and breech-piece of the guiding telescope. In this way the permanent relative parallelism of the axes of the two telescopes has been effectually secured.

Much attention and discussion was given to the arrangements to insure perfection in the clockwork for driving and communicating slow motion in Right Ascension without affecting the rate of the clock. The outcome of these discussions was the plan which is figured and described by Sir Howard Grubb (*Monthly Notices*, vol. xlviii. p. 352), and which has since been adopted by Grubb in all his subsequent instruments.

The method of relief-friction of the Polar Axis, devised by Repsold (which is described in the article "Telescope," *Encyclopædia Britannica*, vol. xxiii. p. 151), was adopted on my suggestion and has worked most perfectly.

The instrument arrived at the Cape on the 11th June 1890, but many experiments and alterations were required before it could be brought into perfect working order.

In February 1891 the photographic object-glass, the eye-end of the guiding telescope, and the breech-piece carrying the photographic slide were returned to Sir Howard Grubb for necessary alterations—the object-glass for a fault on the figure of one surface of the crown lens, the other parts for extensive remodelling which could not

Digitized by Google

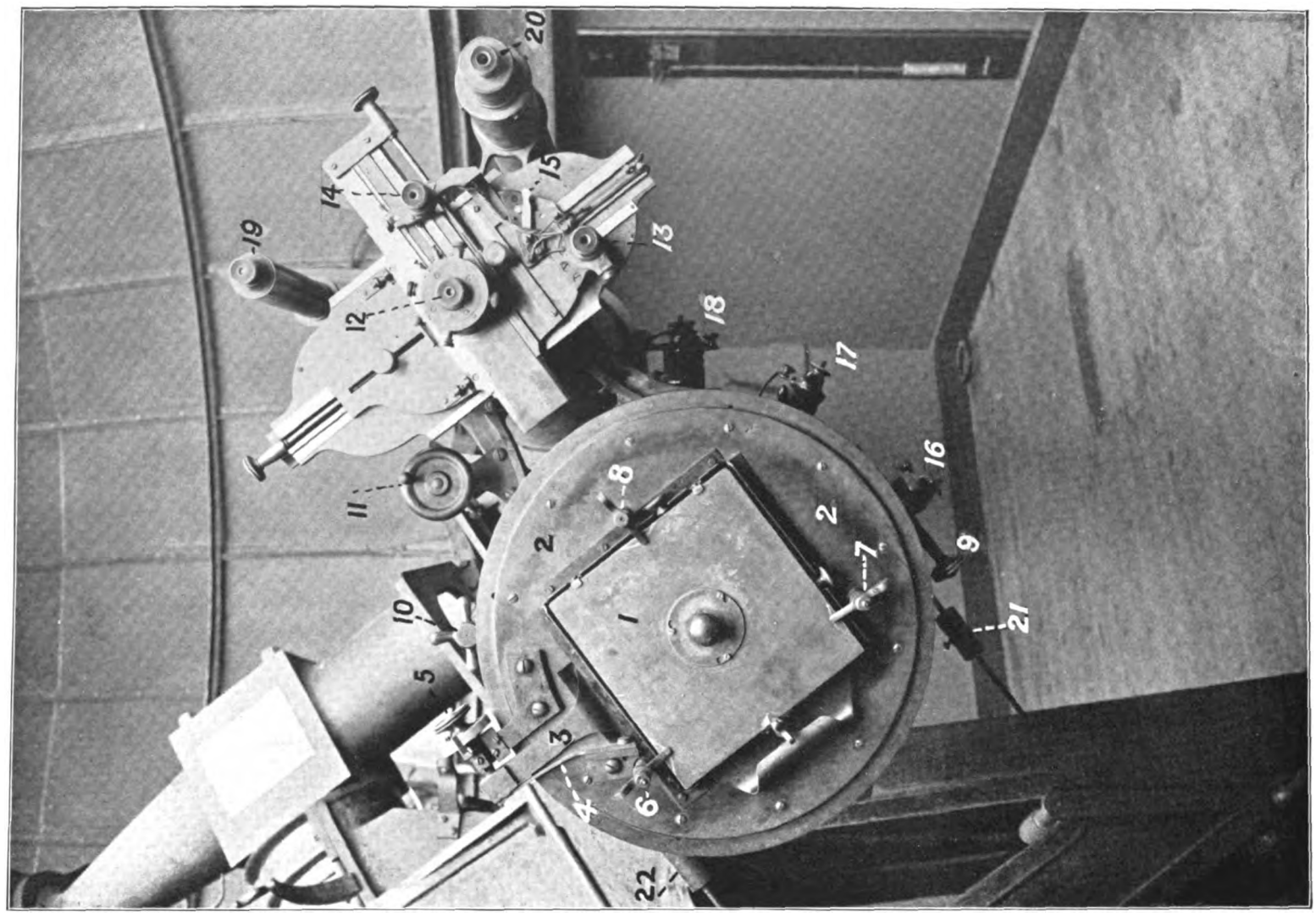

THE ASTROGRAPHIC TELESCOPE.
The Plate-carrier and the Eye-end of the Guiding Telescope.
II.

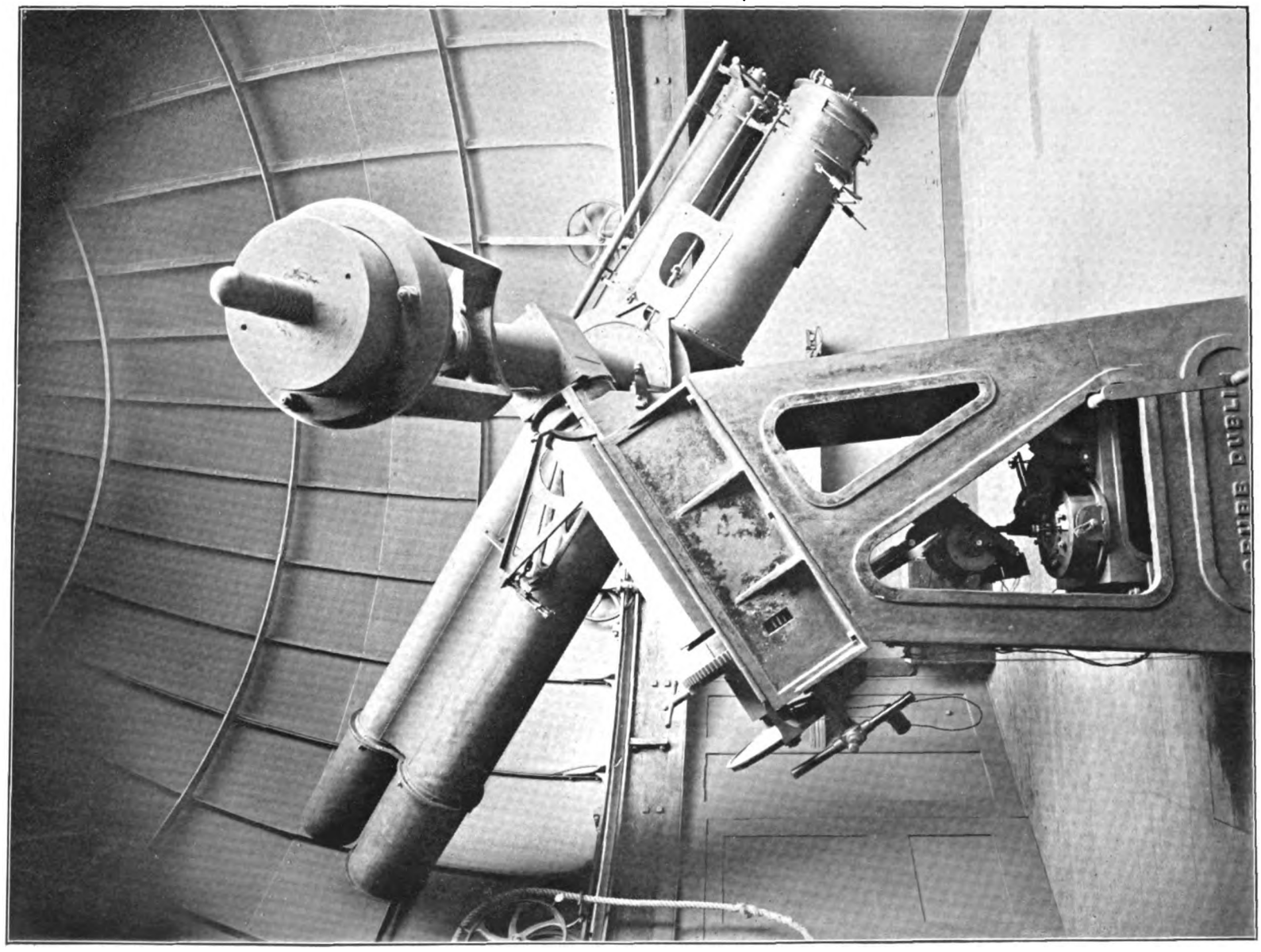

THE ASTROGRAPHIC TELESCOPE.
General View.
I.

[*To face page* 120.

Digitized by Google

Digitized by Google

be effected at the Cape. These alterations were completed in September 1891, but it was not until 1892 July 26 that experimental work was finally concluded and regular work in accordance with the programme of the International Astrographic Congress was commenced.

The instrument is shown in Plate I., so far as it is visible above the floor of the observatory.

Plate II. shows the eye-end of the instrument, including the mounting of the plate-carrier and the large setting micrometer of the eye-end of the guiding telescope.

The general plan of mounting of the instrument is shown in Plates III. and IV. C D E is a massive triangular iron casting resting on the rounded ends of three strong screws at C, D, and E, which bear on three iron supports on the top of the pier. Of these, the point of screw E enters a hollow cone on the iron support, that of screw D a V-shaped slot (the bottom of which is in the line D E), and the point of screw C rests upon a plane horizontal surface. The screw C serves for the adjustment of the inclination of the Polar Axis. The upper side of the triangular iron casting is planed to a true surface, as also is the bottom of the iron pier. Two lugs on the casting, one of which is shown at G, are provided with powerful opposing screws for adjustment of the Polar Axis in Azimuth about a pin, F. The holes in the flange of the iron pier (through which the screws pass that bolt the pier to the triangle) are somewhat elongated to allow adjustment in Azimuth. The whole mounting is very steady, and no re-adjustment of the Polar Axis has been found necessary since the instrument was first erected.

1, Plate II., is the plate-carrier. It is constructed on the general plan described by me (*Bulletin du Comité International Permanent pour l'execution photographique de la Carte du Ciel*, vol. i. p. 23).

There are three short steel pins, or feet, with rounded ends, on the back of the plate-carrier, and these feet rest on three steel bearings projecting from a plate at the back of the plate 2. This plate is connected with, and can be rotated by, the arm 3 through a limited arc.

One of the feet of the plate-carrier enters a hollow cone in one of the steel projections from this plate, another a slot in a second projection, and the third rests on the plane surface of the third projection. The feet of the plate-carrier are pressed into the hollow cone, the slot, and against the plane by the strong spring-clutches 6, 7 and 8.

The strong spring 4 presses the arm 3 against the rounded end of the screw 5, so that the readings of screw 5 define the orientation of the plate-carrier. It is thus possible, if so desired, to photograph a plate for the orientation of any desired Equinox.

The method of internal construction of the plate-carrier, of insuring the orientation of the reseau, and of focal adjustment, are identical with the methods described in the paper above quoted.

9 is the focussing screw.

10 is the clamp in Declination, 11 the slow motion in Declination.

12, the eyepiece of the guiding telescope.

13, the reader of the scale by which the eyepiece 12 can be displaced by a known amount in Right Ascension.

14, the corresponding reader in Declination.

15, a 3-way switch for illuminating either the webs or the scales, or for cutting off light from both.

16, 17 and 18 are carbon-cloth resistances for regulating the illumination of the various parts.

19 is the eyepiece of the reader of the Declination Circle.

20, the eyepiece of the finder.

21 and 22 are the counterpoises of the exposing shutter.

The electric fittings of the telescope have been entirely reconstructed at the Cape. The lamps of the breech micrometer of the guiding telescope, both for illumination of the webs and scales, have all been fitted with sliding contacts so that there are no loose wires about, and the whole instrument works admirably.

Digitized by Google

THE ASTROGRAPHIC OBSERVATORY.

Plate V. gives an external view of the Astrographic Observatory from the north-west.

Plate III. is a plan, and Plate IV. a sectional elevation in the plane of the Meridian looking from the west.

The dotted lines on Plate III. show the sub-division of the lower part of the observatory.

The developing-room is fitted with a sink which runs along the whole of its south side, and is supplied with filtered water and all conveniences for the development and fixing of plates, etc.

The storeroom is fitted with shelving on its north side, and a table along the east side which is convenient for copying and enlargements. The window of this store is fitted with shutters which can be closed, light-tight, when required. Cupboards underneath the table serve for store-space.

The computing-room is shelved on its east and west side for books of reference and boxes of plates that are under examination. A table runs along its south wall, where an assistant and computer are continually employed in the examination of computations connected with the catalogue plates and in other matters connected with the international work of the "Carte du Ciel."

The accumulator batteries used for the control of the clock and for the illumination of the instrument are stored under the steps. The electric lamps used in the observatory, developing-room and computing-room are supplied from the accumulator house near the Victoria Observatory.

Plate II. also shows the frame of teak to which the iron track for the rollers of the dome is bolted.

Plate III. shows the foundations of the telescope pier and the manner in which it is insulated from the floor of the observatory.

In the north-east corner of the observatory proper is the dark cabinet in which the latent image of the reseau is impressed upon the plate immediately before the latter is inserted in the dark slide for exposure to the sky.

At L is an incandescent electric lamp having a short horizontal hollow cylinder of carbon, which is rendered incandescent by a current of 10 amperes at 6 volts.

This carbon cylinder is in the principal focus of an object-glass by Sir Howard Grubb, of 9 inches aperture and 9 feet focal length,* mounted near the end of the square wooden tube which enters the dark cabinet; the latter fills the north-east corner of the observatory proper, as shown in Plate I.

At S is a vertical slit, about one-tenth of an inch in width, which cuts off all light from the object-glass except that which emanates from the centre of the carbon cylinder. The effective light falling on the 9-inch object-glass is thus from a square of incandescent carbon about 0·07 inch on the side, the rays from which are rendered parallel when they emerge from the object-glass O. From the object-glass they fall upon the reseau-carrier R, which is hung upon the end of the wooden tube. This slide contains the permanently mounted reseau which is fitted with agate bearings for the photographic plate, precisely similar in relative position to those on the plate-carrier in which the plate is mounted when exposed to the sky.

Before a plate is placed in the telescope-plate-carrier it is put into the reseau-carrier nearly in contact with reseau, the sensitive surface of the plate being separated from the silvered surface of the reseau only by two thicknesses of postage stamp paper gummed near two adjacent corners of the reseau and at a point midway along the opposite side. Springs on the inside of the lid of the reseau-carrier press on the back of the sensitive plate opposite these three points. The reseau-carrier is then suspended by suitable hooks, the turned-down points of which enter a hollow cone and a slot near the end of the upper side of the wooden tube where it hangs truly normal to the axis of the lens. The dark slide of the reseau-carrier is then drawn out, and the switch of the lamp L turned "on" for the time necessary to produce a good image (15 to 25 seconds according to the E.M.F. of the battery and the sensitivity of the plate). After this exposure the switch is turned off, and, with the aid of faint illumination from a ruby shaded electric light, the plate is exchanged from the reseau-carrier to the telescope-plate-carrier. The dark cabinet thus allows the impression of the latent reseau-image on the plate to be made very quickly and easily, immediately before the exposure of the plate, and the whole arrangement has been found most convenient and practical.

* The funds for the purchase of this object-glass were presented to me by the late James Nasmyth, F.R.S., of steam-hammer fame, to enable me to make preliminary experiments in celestial photography, after the possibilities of that method of observation had been demonstrated by the successful photographs of the Great Comet of 1882. Its definition is not perfect, but it is admirably suited for its present purpose.

Digitized by Google

Digitized by Google

THE ASTROGRAPHIC OBSERVATORY.

PLAN.

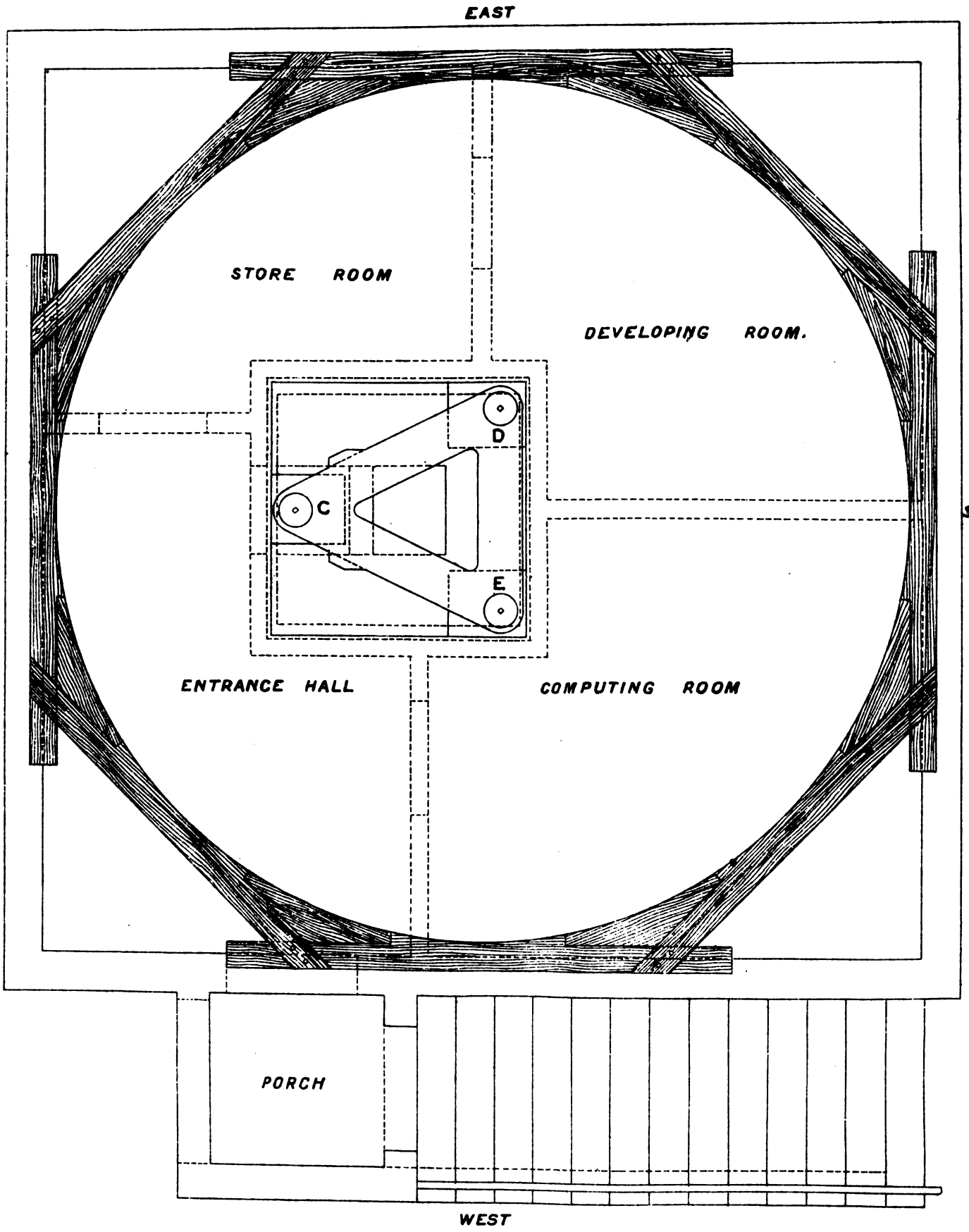

Weller & Graham, Ltd. Litho. London.

Digitized by Google

THE ASTROGRAPHIC OBSERVATORY.

SECTION IN PLANE OF THE MERIDIAN.

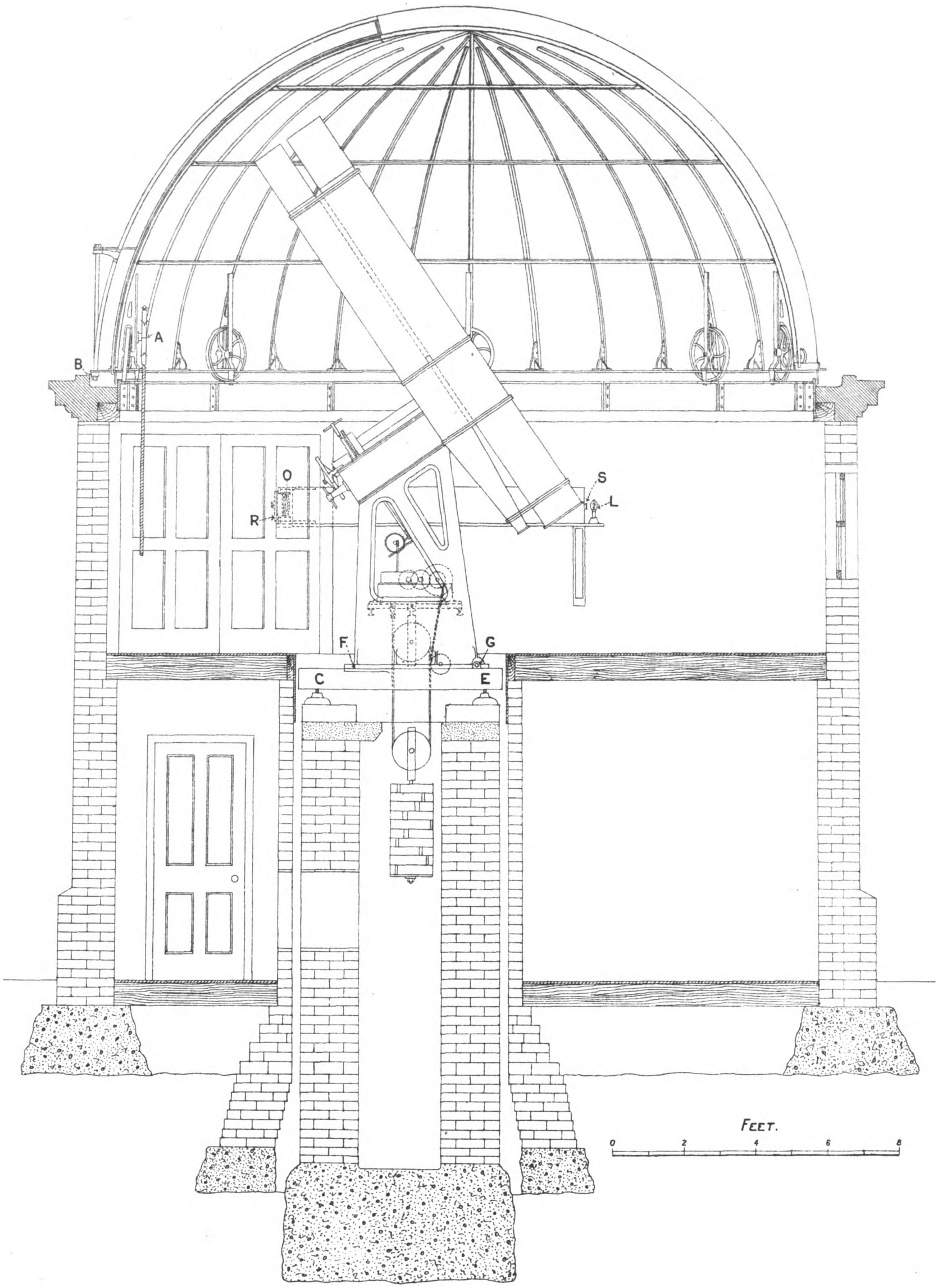

To face plate III.

3067.

Weller & Graham, Ltd. Litho London

Digitized by Google

Digitized by Google

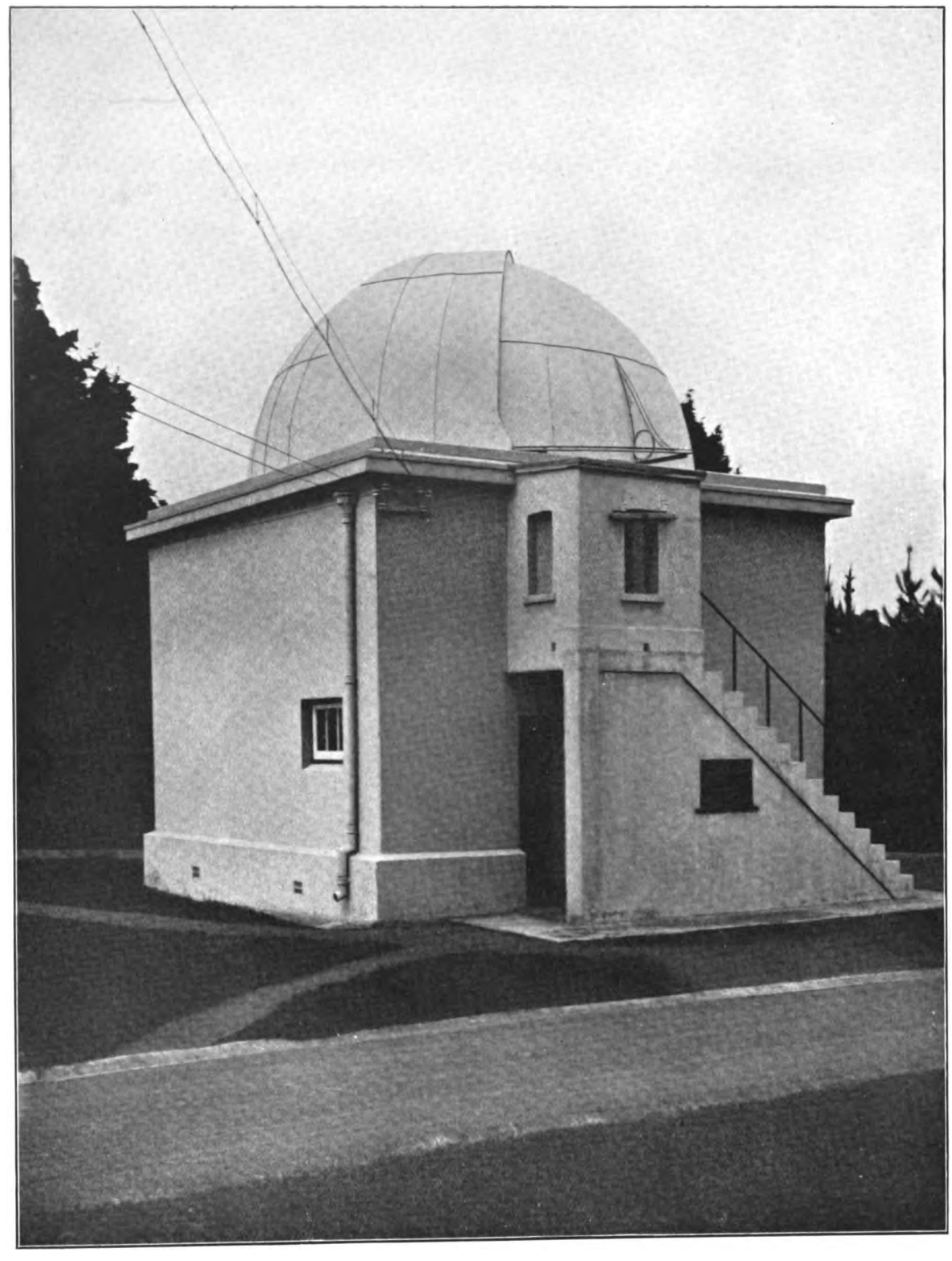

THE ASTROGRAPHIC OBSERVATORY.

[*To face page* 122.

Digitized by Google

Digitized by Google

The floor of the observatory is 20 feet square.

The dome, made by Sir Howard Grubb, is of 18 feet internal diameter; the plan of its construction will be evident from inspection of Plate IV.

The peripheries of the wheels are parts of cones, and the axes of these cones, if produced, would meet at a point in the centre of the dome and in the plane of the iron track on which the wheels roll. The rotation of the dome by an endless rope hung on the wheel A is very easy.

The shutter is on the same plan of construction as that of the Victoria Telescope, being pivoted at B; there is, however, but one shutter instead of two as in the Victoria Telescope.

The wheels or rollers of the dome are mounted on a cast-iron base-plate, from which the angle-iron framework springs. The framework is covered with papier-mâché with overlapping joints, the sheets being connected to the framework and to each other by copper rivets.

A sidereal clock stands in the south-west corner of the observatory, a table and switch-board in the north-west corner, and in the south-east corner spare steps for giving access to the eyepiece for objects at low altitudes. In this way the floor of the observatory remains most conveniently free from all obstruction, and it is difficult to imagine an observatory of the kind more convenient for use in all respects.

Digitized by Google

Digitized by Google

PART V.

THE 7-INCH HELIOMETER.

Digitized by Google

PART V.

THE 7-INCH HELIOMETER.

THIS instrument has its origin in the following letter addressed by H.M. Astronomer to the Secretary of the Admiralty :—

6 HYDE PARK GATE, LONDON,
25*th March* 1884.

Sir,—Soon after my appointment in 1879 as H.M. Astronomer at the Cape, and in connection with my first reports on the condition of the Observatory, it became my duty to indicate that the equipment of the Observatory was deficient, in so far that it possessed no Instrument for refined extra-meridian observation.

The work of my predecessor, Mr Stone, was confined to the construction of an extensive Star Catalogue, and the whole force of the Observatory had accordingly been concentrated upon meridian work. But this catalogue having been completed, the progress of science demanded that the Observatory should be provided with a powerful and efficient extra-meridian instrument.

When in 1879 I suggested that some steps should be taken in the matter, I was advised by the Hydrographer and Sir George Airy that, before submitting to my Lords Commissioners of the Admiralty any formal proposal on the subject, I should ascertain, by experience of the working of the Observatory for some time, what were the most necessary objects of research and the most suitable instruments for their pursuit.

This time has now arrived when I am in a position to answer these questions and to submit a definite proposal for their Lordships' approval.

The lines of research which appeared to promise the most useful and important results for the advancement of Astronomy were in the direction of investigations on the Parallax of the fixed Stars. The first discovery of the real Parallax of any fixed star was made by Henderson (one of my predecessors at the Cape) in the year 1833, and it is justly considered the crowning glory of his short and brilliant work, an era in the history of Astronomy, and the most honourable achievement of the Observatory. But no further advance in this direction beyond the confirmation of Henderson's results had since been made in the Southern Hemisphere, and it seemed to me that the interests of science as well as the traditions of the Observatory pointed to research in this direction as an essential object of pursuit.

I knew that the purchase of an adequate instrument for the satisfactory prosecution of such delicate and difficult work would involve a considerable outlay of public money. I therefore resolved, before making any demand, to work out, carefully and patiently, the details of the required instrument, and to make such a complete series of preliminary experiments with a kindred instrument of small size as would make it quite certain that public money might be spent to the best advantage.

I accordingly purchased, at my private expense, from Lord Lindsay (now Earl of Crawford and Balcarres) the Heliometer which I had employed in conjunction with his expedition to Mauritius in 1874, and afterwards on my expedition to Ascension in 1877. I altered or reconstructed its various parts to suit the requirements of experience, and applied the improved instrument to the work in question. The result of that work I had the honour to forward through the Hydrographer and the Astronomer-Royal to the Royal Astronomical Society in December last, and they are now being printed in the form of a volume of the memoirs of that Society.

I have now practically done all that I can advantageously do with my present instrument, and I have described, in the Memoir in question, the instrument that is required for the further prosecution of like researches.

I have also described the precise plan and scope of the proposed work and its extreme importance in the present state of Astronomy.

The instrument required is a heliometer of 7 inches aperture, its cost £2200, and the cost of an Observatory with Dome £500—say, in all, £2700.

This estimate is 10 per cent. in excess of approximate estimates which I have obtained, and will *certainly* cover the whole cost.

No augmentation of the Observatory Staff will be required.

Two years will be required for the construction of the instrument, and the payment of the cost might be extended over two or even three years.

I have now spent five years of my life at the Cape, and my great desire is to carry out the programme which I have indicated whilst health and strength remain to me.

That programme requires ten years for its completion, and I cannot expect a continuance of the energy and strength which the personal execution of such a work requires, if time is lost in commencing it.

Digitized by Google

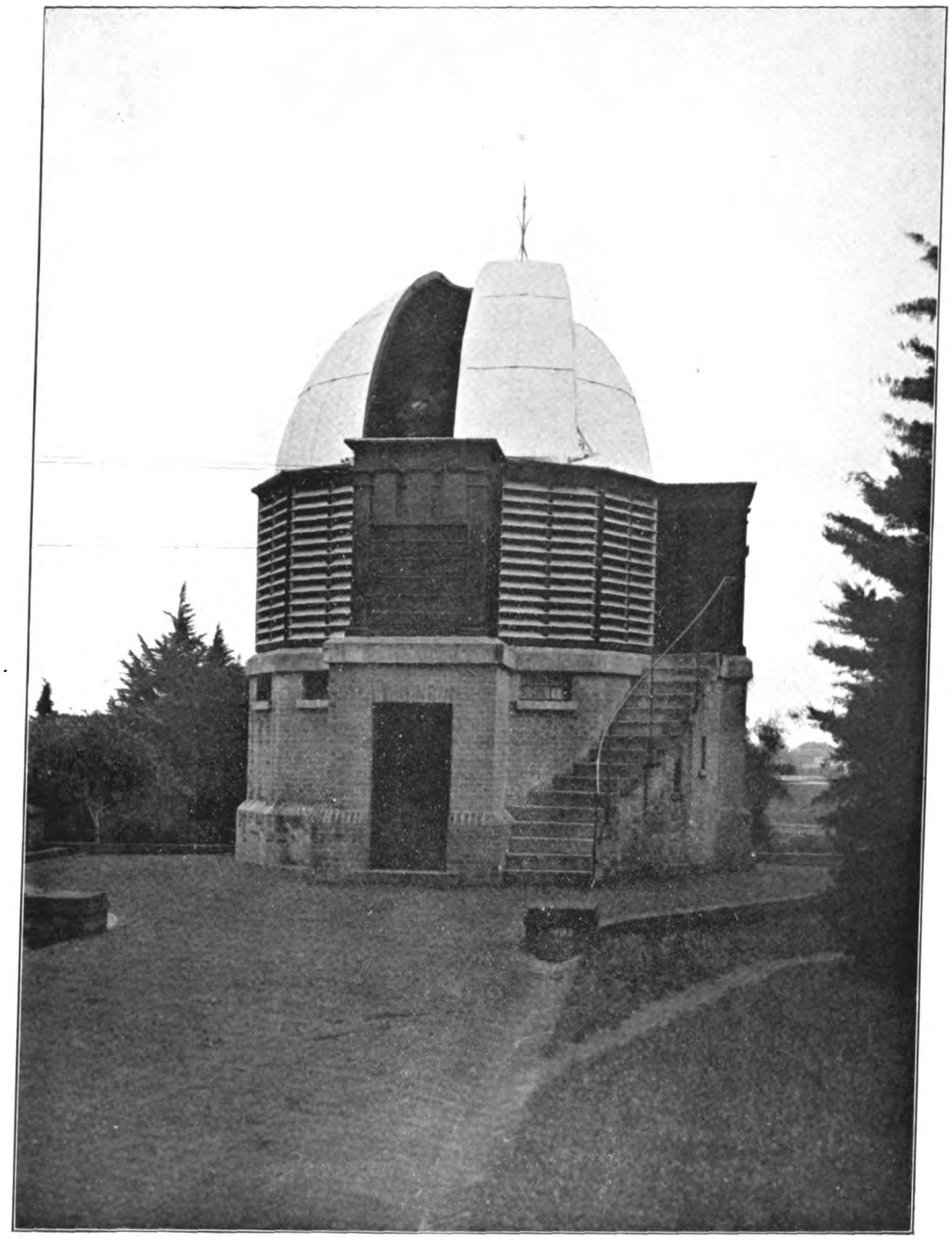

THE HELIOMETER OBSERVATORY.
General View from the South-east.

[*To face page* 126.

Digitized by Google

THE HELIOMETER OBSERVATORY.

PLAN.

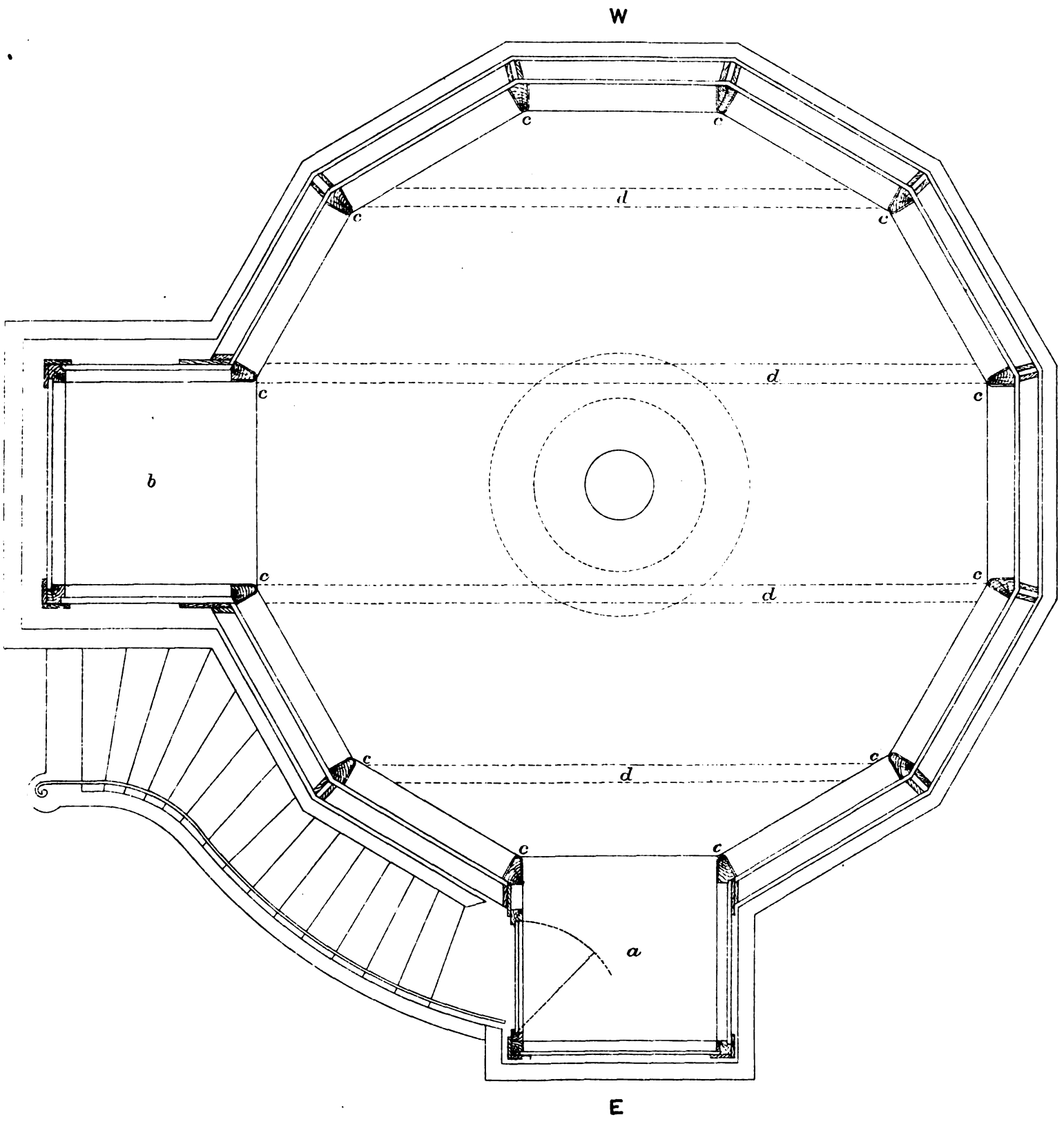

To follow plate I.

weller & Graham Ltd Litho. London

Digitized by Google

THE HELIOMETER OBSERVATORY.

SECTION IN PLANE OF THE MERIDIAN.

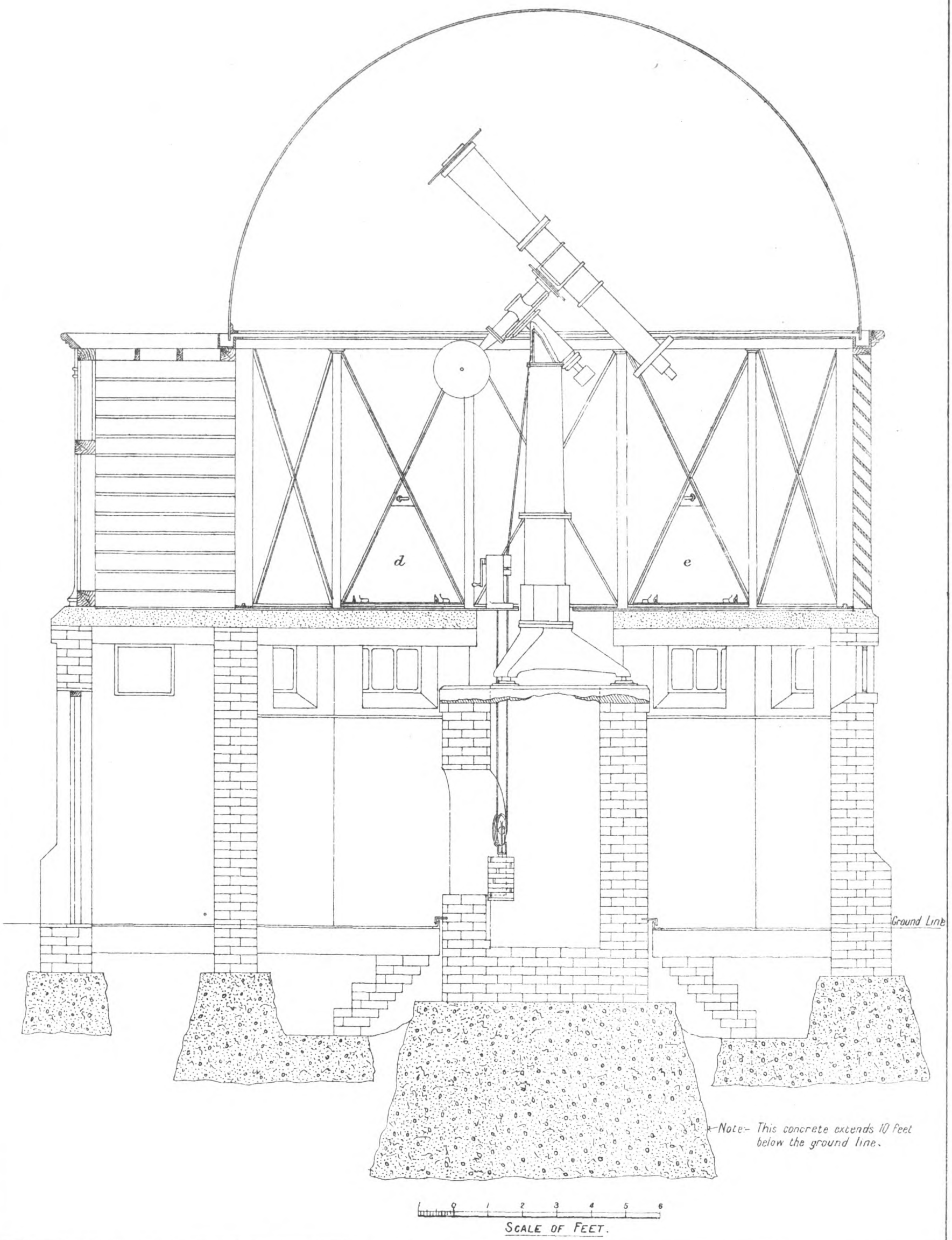

To face plate II.

3067.

Weller & Graham Ltd Litho London

Digitized by Google

Digitized by Google

I may also add that the programme which I have proposed for the immediate employment of such an instrument is by no means the limit of its practical applications—for example, it is now almost universally admitted by astronomers that the only method by which we shall arrive at a definitive determination of the Solar Parallax is by observation of the Minor Planets with a Heliometer. During the present century the most favourable oppositions of such planets occur between the years 1886 and 1892. It is desirable that there should be an instrument capable of taking advantage of such an opportunity.

Such a Heliometer is also available for all extra-meridian work requiring accurate measurement of angles less than 2 degrees—such as observations of Comets, determinations of the Moon's Libration or its Parallax and Parallactic inequality, etc., etc.

I have now stated the reasons for my request as explicitly as I can.

I have laid down, in the first place, *a specific programme and pledged myself to its execution*, because I am desirous to convince their Lordships that their liberality will not be wasted on unconcentrated effort. I have gone into further explanations to show that, *the primary object once accomplished, the Observatory will not be saddled with a useless instrument*, but that there will be wide fields of much-needed research still open for its employment.

For these reasons I submit that it is essential for the progress of the work of the Observatory, and in the interest of the public service, that immediate steps should be taken to supply an adequate Heliometer of the above-mentioned description.

As their Lordships will doubtless recognise the importance of this application, and obtain the opinion of competent authority regarding it, I should be glad, in the event of its being referred to any committee, that this should be done as soon as possible, in order that I may be available to give evidence or answer any questions during my stay in England.—I am, Sir, your obedient servant,

(Sgd.) DAVID GILL, H.M. Astronomer.

The Lords Commissioners of the Admiralty having approved of the acquisition of a heliometer of the kind proposed, the work was entrusted to Messrs Repsold of Hamburg.

The details of its construction involved a long correspondence with Messrs Repsold; and they met all my suggestions in the most excellent spirit. The instrument was inspected by me at Messrs Repsold's workshops in the spring of 1887, and, after a few final alterations, it was packed and delivered on board the R.M.S. *Tartar* and reached the Cape under my own care in July 1887. Meanwhile an observatory had been built for its reception.

Experience with the 4-inch heliometer showed that it was desirable, if possible, to raise the instrument some height above ground, because in winter damp fogs sometimes prevail, covering the ground to a height of 8 or 10 feet. A fireproof record room was also a desideratum for the preservation of valuable original records, and it was decided to combine a record room with the heliometer observatory.

Plate I. gives an external view of the observatory from the south-east. It is a twelve-sided building, the lower part, or record room, being built of brick, the observatory of iron, protected from the sun by louvres of teak wood, and surmounted by a dome.

Plate II. is a plan of the observatory, and Plate III. a sectional elevation of the observatory and record room in the plane of the Meridian.

The record room is fitted with slate-shelving on iron frames and supports; the windows are of plate-glass in iron frames; the roof, which forms the floor of the observatory, is of concrete, cast between the iron girders *d*. The entrance to the record room is from the east under the porch *a*, Plate II. An iron door inside the porch affords an additional protection to the record room. Under the small chamber *b* is a porch, entered on the ground level from the south, to hold the accumulator batteries originally used with the heliometer. This porch is now used as a place for small stores, because the electric current for illumination of the observatory is no longer supplied from accumulators, but by a 50-volt alternating circuit, which, for the 6-volt lamps employed to illuminate the scales, position-circle, etc., of the heliometer, is converted to a 6-volt alternating current by a small transformer.

The rail upon which the wheels of the dome run is supported by twelve cast-iron pillars *c*, *c*, *c*, etc., mounted on a cast-iron frame, the latter being bolted to the masonry of the record room.

The spaces between the pillars are filled with sheet iron that is screwed to the pillars and cross stays, which are shown in Plate III. In four of the panels there are triangular doors (shown at *d* and *e*, Plate III.), which open inwards, and so permit free circulation of the air through the louvres. These louvres are of teak and effectually prevent the heating up of the ironwork by direct rays of the sun.

The dome is 18 feet in diameter, and is constructed on precisely the same plan as that of the Astrographic Observatory.

The dome and ironwork of the observatory were made by Sir Howard Grubb of Dublin; the teak louvres were made and fitted at the Cape. The observatory has proved most complete and satisfactory in every respect.

The heliometer and the observing chair are fully described in the *Annals of the Cape Observatory*, vol. vii. pp. 1–71.

Digitized by Google

Digitized by Google

INDEX.

Roman numerals indicate pages in the "History."
Ordinary „ „ „ „ "Description."

Abbe, Cleveland, Meteorological investigations by, at the Cape Observatory, cl.
Aberration, Constant of, can be determined by observations of radial velocity, lxxvii.
—— —— Determination of, by Gill and Finlay, xliv, cliii.
Adams, J. C., approves of Gill's plan to photograph the heavens, li.
—— corrects and extends Damoiseau's tables of Jupiter's Satellites, lxxxiv.
—— suggests method of deriving their latitudes, lxxxv.
Adams, Franklin, see *Franklin Adams*.
Aden, Longitude of, determined by Lord Lindsay's expedition, xxxv.
Aden-Cape Longitude, ciii, cxxx, cxlvi, cxlvii.
Airy, Sir G. B., investigates errors of Fallow's mural circle, xiii.
—— reduction of Fallow's observations, xv.
—— opposes the necessity for a Reversible Transit Circle, xl.
—— reduces and publishes Fallow's meridian observations, xlv.
—— recommends observations of difference in R.A. between Mars and comparison stars as a means of determining the value of the Solar Parallax, lxix.
—— supports proposal for telegraphic determination of the longitude of the Cape Observatory, cxxx.
Allis, Mr, photographs the great Comet of 1882, xlviii.
Alston, Mr, his triangulation connecting Bosman's Survey with Geodetic Survey, cv.
Ambronn, Dr, xxxix, lxxiii.
Anderson, Sir J., allows the use of Durban-Aden cable for longitude determinations, cxxx.
Angles, probable errors of Angles in Geodetic Survey, cxviii.
Arc of Meridian—Gill's original proposal of great geodetic arc along 30th Meridian, civ.
Arcs, Geodetic meridian, in S. Africa, cxviii, cxxi, cxxiii.
Astrographic Chart and Catalogue, The International, xlix, cxxxi.
—— Dyson sends Hough measurements of plates taken at Perth W.A., cxxxii.
—— Instruments used for, cxxxii, 120.
—— Zone assigned to the Cape Observatory, cxxxii.
Astrographic Congress, The International, decide to catalogue the stars to the 11th magnitude and to make star-charts approximately to the 14th magnitude, li.
Astrophysical Observations, cxxxix.
—— Apparatus used for measuring Spectrographs, cxli.
—— Certain stellar lines found by Lunt to be due to silicon, cxl.
—— Equipment at the Cape Observatory necessary for, given by Mr Frank M'Clean, cxl.
—— Mr Frank M'Clean discovers lines of Oxygen in Spectra of Helium Stars, cxxxix.
—— Spectrum of η Argûs, cxli.
Auwers, A., xxxiii, xxxiv, xxxix, lxxii.
—— discusses all the meridian observations of the comparison stars for *Iris*, *Victoria* and *Sappho*, lxxiii, cli.
—— selects Standard Stars for Gill's first Cape Catalogue, xlv.
—— views on the necessity of the photographic Durchmusterung, his, li.
—— visits the Cape and observes *Victoria* with Gill, to obtain the Solar Parallax, lxxii, cxlix.

Backlund, Dr O., inspects the Cape Observatory, clxi.
Backwell, Miss, clxiii.
Bahn, W., reviews the South African Arc of Meridian, clxxix.
Bailey, Captain, south coast of Africa and British Kaffraria surveyed by, cii.
—— Gill's rediscussion of his Survey published in Vol. II. of Cape Geodetic Survey, civ, clxxiv.
Bailland, M., Director of Paris Observatory, cxxxii.
Baines, A., clxiii.
Baker, Herbert, designs the observatory for the Victoria Telescope, 9.
Bakhuyzen, jun., Dr, xxxvi.
Baldwin, J. M., visits the Observatory, clxii, clxxii.
Barrow, J. (Secretary to the Admiralty), vi, vii, viii, x, xx, xxi.
Base Lines, of Geodetic Survey, cxiii to cxvii.
—— measuring bars, cxiii.
Beaufort, Captain, xiv.
Benoit, M., of International Bureau of Weights and Measures, cxiii.
Bessel, F. W., xviii.
—— Determination of the Mass of Jupiter from the Heliometer Observations of the Satellites, lxxxv.
—— *Fundamenta Astronomiæ*, xxv.
—— Gold Medal of the Royal Astronomical Society awarded to, xviii.
—— Parallax of 61 Cygni, xviii.
Blackley, Dr, xxxv.
Blair, Dr R., xvi.
Bohlin, Dr, Computation for Ephemeris of Victoria, lxxiii, lxxxi.
Bosman, Mr, His survey from Vryburg westward to 20th Meridian, civ.
Boss, L., requests observations of 1100 stars south of −30°, xlviii.
Boundary line between British and German territory in S.W. Africa, Determination of the, civ, clii, cliv.
—— thanks of Colonial Office to Gill, clii.
British Association, The, visits South Africa, clix, clx.
Brunner, Base-measuring apparatus of, xxxvi.
Butler, J.T., clxii.

Carney, L., clxiii.
Cambridge Instrument Co., cliv, clv, 18.
Cape, Longitude of the, xxxv, cxlii.
Chapman, Paul, cv, clviii.
Chaplin, Mr, cvii.
Chase, Mr, Triangulates the Victoria comparison stars at Yale, lxxiii.
Cheeseman, Robert, clxiii.
Clerke, Miss Agnes, visits the Cape Observatory, cxlix.
Close, Captain, cxliii.
Coates, Miss, clxiii.
Codrington, Robert, Administrator of N.E. Rhodesia, cvii, cviii.
Cochrane, A., cxi.
Cohn, Dr, on clock-work for observing in R.A., with moving wire, 50.
Colley, Sir George, supports Gill's proposal of Geodetic Survey, ciii.
Comets:—
—— 1843 I., xxviii.
—— 1882 II., xlii, xlviii, xlix, cxlvi, clxiv.
—— 1886 VII., xlii.
—— 1886 IX., xlii.
—— 1887, Comet Barnard Henry, cxlviii.
—— 1887 I., cxlviii.
—— 1888 I., cxlviii.
—— Halley's, xxviii.
—— References to published observations of clxxiii, clxxv, clxxvi, clxxvii, clxxviii.
Comstock, his determination of refraction and aberration at the Washburn Observatory, xxv.
Comte, J. M., on the origin of the Solar System, 4.
Congress of Directors of National Ephemerides at Paris, clii.
Congress, International Astrographic, proposed by Gill, cxxxi.
—— —— Meeting at Paris in 1887, cxlviii.
—— —— Meetings Permanent Committee, cl, clii, clv.
—— —— Geodetic Association, clv.
—— —— Catalogue of Scientific literature, clv.
—— —— International Association of Scientific Academies, clix.
Cooke, T., & Sons, Instruments supplied by, xxxii, xxxviii, xl, xli, 38, 49.
Cookson, B., designs a photographic zenith telescope, lxxxvii *n*.
—— observes the Mutual Distances and Position Angles of Jupiter's Satellites, xlii, clvi.
—— revisits the Cape in 1905 and makes further Heliometer Observations, xc, clx.
—— publishes (1906) Determination of the Mass of Jupiter and Orbits of the Satellites from Observations made with the Cape Heliometer, xcii.

Digitized by Google

Cookson reduces Cape Heliometer Measures of Jupiter's Satellites, lxxxvii, xc, xcii.
—— visits the Cape Observatory, clxxii.
Copeland, Dr R., accompanies Lord Lindsay to observe the Transit of Venus (1874), xxxv.
Cornwall and York, Duke of, prevented by engagements from unveiling the Memorial to F. M'Clean, 3.
Corona, Attempts made with the coronagraph to photograph without an eclipse on Huggins' method, xli.
Cox, W. H., Assistant at the Cape Observatory, clii, clxiii, clxv.
Crosby, Miss N., clxiii.
Crawford and Balcarres, Earl of, appoints Gill to Lord Lindsay's Observatory, xxxii.
Crommelin, A. de C., reduction of Greenwich and Cape observations for parallax of the Moon, cxxvii.
—— Note on compression of the earth, cxxviii.

Dallmeyer, J. H., Photoheliograph of, xli, xlix.
Darwin, Sir George, his services to Geodetic Survey of S. Africa, cxii.
—— visits S. Africa as President of British Association, clxi.
—— and Lady, guests of Gill at Cape, clxi.
Darwin, H., 18, 23, 26.
Davis, H. (Photographer to Lord Lindsay), xxxv.
De Chazal, places his house and estate at Lord Lindsay's disposal, xxxv.
Delambre, on Stellar Parallax, xviii.
De la Rue, Warren, xxxviii.
De Sitter—see Sitter, de.
De Witt, Mr, occupies La Caille's original residence, ix.
Doering, Lieutenant, cv.
—— Appreciation of his Services, cxxiii, clviii.
Döllen, Dr, xxxvii.
Dollond, supplies instruments to the Observatory, vi, vii, xi, xxii.
Donkin, Sir R., xi.
Donner, Prof. A. S., inspects the Cape Observatory, clxi.
Doppler Principle, The, lxxvii, lxxix, 5, 6.
Double Stars, measures of by Cape observers, cxxxviii.
Duncan, Professor, at St. Andrew's University, xv.
Dundas, G.'H. D., xx.
Durchmusterung, Cape Photographic—see *Star Catalogues* and *Kapteyn*.
—— Revision of—see *Star Catalogues* and *Innes*.
Dunman, Lieutenant T. N., cx.
Dyson, Astronomer Royal, furnishes copy of measures of overlapping Zones of Perth catalogue plates with Cape zone, cxxxii.

Eldin, Lord, xv.
Electric Light Installation Supplied to Observatory, clxviii.
Elkin, W. L., clxvi.
—— appointed to Yale College Observatory, clxvii.
—— discussion of Heliometer Observations of Iris for Solar Parallax, lxxii.
—— observes *Iris* for Solar Parallax, lxxi.
—— observes *Victoria* for Solar Parallax, lxxii.
—— observes *Sappho* for Solar Parallax, lxxiv.
—— observes the Great Comet of 1882, clxiv.
—— resolves to join Gill at the Cape, xxxix.
—— takes part in the Stellar Parallax work, lx.
Engine, Steam, with fire extinguishing arrangements supplied, clxviii.
Englefield, Sir H., x.
Eros, suitably placed for determination of Solar Parallax, etc., in 1931, lxxxiv.
Eros, Solar Parallax determined from observations of, lxxx.
Europium discovered in the spectra of certain stars, clxii.
Everest, Lieut.-Col., ix.
Ezzey, C. E., cx.

Fallows, Rev. F., appointed H.M. Astronomer at the Cape, viii.
—— character of, xiv.
—— early life of, viii.
—— illness and death of, xiv.
—— instruments used by, xi, xiii.
—— —— difficulties with, xiii.
—— Mural Circle Microscopes, Anomalies of the, xiii.
—— Observations of Mars for parallax, xiv.
—— —— Moon Culminations, xiii, xiv.
—— —— Pendulum, xiii.
—— —— 273 Stars, xi.
—— —— 425 Stars, xv.
—— —— Uranus, xiv.
—— —— Summary of, xv
—— Preparations for his new duties on appointment, viii.
—— reports to the Admiralty respecting choice of site for Observatory, ix, x.
—— Scientific papers not contained in the Cape Observatory Publications, List of, clxxv.
Fallows, temporary Observatory erected by, xi.
—— work in connection with the establishment of the Observatory, viii *et seqq.*
—— Mrs., discovers a comet, xiii.
—— observes with the meridian instrument, xiii.
—— observes with the mural circle, xiv.
Fayrer, J., appointed assistant to Fallows, ix.
—— inefficiency of, xiii.
Fernyhough, Mr, photographs the great Comet of 1882, xlviii.
Figure of the Earth, Dr Bahn determination of, from South African Meridian Arcs, clxxix *et seq.*
—— Crommelin from meridian determination of Moon's parallax, cxxvi.
—— Gill's note on a method of determining the, cxxviii.
—— Helmert's note on, cxxix.
Finlay, W. H., cxlii, cxlvi, cxlvii, cxlix.
—— appointed assistant at the Cape Observatory, clxiii.
—— —— Stellar Parallax work, lxii.
—— —— observations of *Iris* for $\odot^r$ parallax, lxxii.
—— —— Triangulation of the Victoria comparison stars, lxxiii.
—— discovers and observes several Comets, xlii, cxlvii, cxlviii.
—— early life of, clxiii.
—— longitude operations, civ.
—— makes Zenith Telescope observations with Gill for determining the constant of aberration, cliii.
—— member of Cape Meteorological Commission, clxiv.
—— observes Comets and Occultations with the 7-inch equatorial, xli.
—— —— great Comet of 1882, clxiv.
—— observes the mutual distances and position-angles of Jupiter's Satellites, xlii, lxxxviii, cli.
—— Secretary of South African Philosophical Society, clxiv.
—— President of South African Philosophical Society, clxiv.
—— Star correction tables, his, clxiv.
—— work at the Cape, general sketch of his, clxiii.
Franklin-Adams, J., arrives at the Observatory, clviii.
—— death of, clix.
—— his star-charting by photography, clviii.
Fraunhofer, J., discovers lines in the solar spectrum, 4.
Freeman, I., clxii.
Frere, Sir Bartle, supports Gill's proposed Geodetic Survey, cii.
Fry, Rev. John, placed in charge of the Observatory, xiv.
Fundamental Stars, Resolutions passed at the International Conference 1896 on, xlvii.

Gibson-Craig, Sir J., xv.
Gilbert, D., vi.
Gill, D., sen., xxx, xxxi.
Gill, Sir D., Address on the unveiling of the memorial stone of the Victoria Observatory, 3.
—— agreement as to Anglo-German Boundary arranged by him, civ, clii.
—— thanks for above service from Colonial Office, clii.
—— applies to the Royal Society for grant to enable him to attempt Huggins's method of photographing the Solar Corona, and to make direct star-maps, xlix.
—— attends Astrographic Congress and Meetings of Permanent Committee, cxlviii, cl, clii.
—— appointed H.M. Astronomer at the Cape, xxx, xxxix.
—— —— Astronomer at Dun Echt, xxxii.
—— Ascension, Scientific results of expedition to, xxxviii.
—— cause of retirement from the Cape, clxii.
—— Constants of Astronomy determined by him adopted for use in National Ephemerides, clii.
—— Chronometers, method of transposting, xxxiv.
—— consulted by the Colonial Office with reference to determination of Anglo-German Boundary, cv.
—— connects longitude of Berlin with Seychelles, Aden, Bombay, Suez, Alexandria, Réunion, Rodrieguez, and local points in Mauritius, cxxxiii-cxxxvi.
—— determines the division errors of the Heliometer Scales, cl.
—— early experience in designing and making astronomical instruments, xxxi, xxxii.
—— early life of, xxx.
—— Egypt, measures base-line for the proposed survey of, xxxvi.
—— erects beacons defining the property of the Cape Observatory, x.
—— elected senior member of permanent committee of Astrographic Congress, cxlviii.
—— Heliometer, accident to Lord Lindsay's, xxxviii.
—— —— preparatory work with the, xxxiii.
—— Juno, determines Solar parallax by heliometer observations of, xxxvi.
—— Jupiter, Mass of, proposed methods to determine, lxxxiv.
—— —— —— observations to determine, lxxxv.
—— makes Zenith telescope observations with Finlay, for constant of aberration, cliii.

Digitized by Google

Gill, Moon, determination of mass of, lxxx, lxxxiv.
—— —— suggests observation of crater Mösting A to determine its parallax, cxxvi, cxxviii.
—— New Astronomy, Sketch of the Progress of the, 3.
—— obligations, his, to Professor Kapteyn, lviii.
—— observes *Victoria* with Auwers for the Solar Parallax, lxxii.
—— Parallax, Stellar at the Cape, lx *et seqq.*
—— —— Solar Discussion of previous methods and determinations, lxviii *et seqq.*
—— —— —— Determination of the, from observations of *Juno*, xxxvi.
—— —— —— —— —— *Mars*, xxxviii.
—— —— —— —— —— *Victoria*, *Sappho* and *Iris*, lxxi–lxxvi.
—— —— —— General conclusion as to probable value, lxxx.
—— proposed measurement of great arc on 30th Meridian of E. longitude, civ.
—— scientific papers not contained in the Cape Observatory Publications, List of, clxxvii.
—— Survey, Geodetic, proposed by him, cii.
—— Star-charting, proposed photographic method of, xlix.
—— Time, method of determining, by transits of stars in the vertical of the Pole Star, xxxiv.
—— Venus, preparations for observing the Transit of (1874) at Mauritius, xxxiii.
—— —— on the failure of all attempts to determine the Solar Parallax from Transits of, lxix.
—— visits various foreign observatories, xxxix.
Gill, Sir D. and the Earl of Crawford (formerly Lord Lindsay). Scientific papers not contained in the Cape Observatory Publications, List of, clxxvii.
Gill, Sir D. and W. L. Elkin, scientific paper not contained in the Cape Observatory Publications, clxxviii.
Gill, Sir D. and S. S. Hough, scientific paper not contained in the Cape Observatory Publications, clxxviii.
Gill, J. F., cx.
Gill, Lady, her account of the expedition to Ascension, xxxviii *n.*
Gladstone, W. E., xxx.
Goatcher, A. W., his work, clvii, clxiii.
Goode, R., cvii.
Gordon, Capt. G. H., cx, cxii, cxxiii.
—— appreciation of his services, cxii.
Goulburn, Mr, vii.
Gould, B. A., xxvii.
Grey, Earl, sanctioned Geodetic Survey of Rhodesia, cv.
Grubb, Sir Howard, constructs various instruments for the Observatory, xli, xlii, xliii, liii, cxxxii, cxxxix, cxlvi, cxlvii, cxlviii, cl, cliv, clix, 7, 14, 120, 123, 127.

Hall, observes *Iris* for Solar Parallax at Yale, lxxii.
—— —— *Victoria* for Solar Parallax at Yale, lxxii.
—— —— *Sappho* for Solar Parallax at Yale, lxxiv.
Hall, Russell & Co., xxxii.
Halley, E., v.
Halm, J., appointed Chief Assistant at the Cape, lxxviii.
—— Spectroscopic Researches, on the period of the Sun's rotation, xli.
—— —— on the Solar Parallax (aberration constant) lxxviii.
Hansen, P. A., xxiv.
Hartnup, Dr, xxxiii.
Hartwig, Prof., xxxix.
—— his Heliometer Observations of *Victoria* at Bamberg, lxxii.
—— —— *Sappho* at Bamberg, lxxiv.
Harzer, Prof., Horizontal Collimators of his Transit Circle, 79.
—— inspects the Cape Observatory, clxi.
Heatlie, Mr, assists Major Laffan in boundary Survey, clvi.
Heliometer—see *Instruments.*
Helmert, Dr, Notes on dimensions and figure of the Earth, cxxiv, cxxix.
Henderson, T. appointed H.M. Astronomer at the Cape, xvi.
—— —— Astronomer Royal for Scotland, xvii.
—— Character of, xvii.
—— Early contributions to various scientific journals, xvi.
—— Early life of, xv.
—— Longitude of the Cape determined by, xvii.
—— Moon's parallax, Determination of, xvii.
—— Mural Circle Microscopes. Anomalies in the readings of the, xvii.
—— Observations made in 1832–1833, xvi.
—— —— Discussion of his, xvii.
—— —— Reduction of his Cape, xvii, xix.
—— Occultations of stars by the Moon, method of computing observed, xvi.
—— Recommended as Superintendent of the Nautical Almanac, xvi.
—— Resigns post of Astronomer Royal for Scotland, xxviii.
—— —— H.M. Astronomer at the Cape, xvi.
—— Scientific papers not contained in the Cape Observatory Publications, List of, clxxv.
Henderson, Solar Parallax determined by, lxviii.
—— Stellar Parallax, The first to measure, xvii, xviii.
—— Theory of Probabilities and Method of Least Squares, One of the first to employ, xvii.
Henry, The brothers, encouraged by Admiral Mouchez to construct astrographic lenses, xlix.
Herschel, Sir J. F. W., arrives at the Cape, xxi.
—— Cape Education scheme worked out by, xxi.
—— Henderson's work on parallax, xviii.
—— Work at Feldhausen, 1834–1838, xxi.
Herschel, Sir W., x.
Hildebrand finds nitrogen in uranite, 5.
Hilger, constructs prisms for spectroscope, clv, 33.
Hind, J. R., xxvii.
Hinks, A. R., Inspects the Cape Observatory, clxi.
—— Determination of the Solar Parallax from observations of Eros, lxxx
—— Stellar parallax observations, xcvii, *n.*
—— Value of the Mass of the Moon, lxxxiii.
Horrebow's (Talcott's) Method used with the Zenith telescope, 1889, 1890, in connecting the northern and southern systems of declination, xliv.
Hough, S. S., clxiii.
—— appointed chief assistant at the Cape Observatory, cliii, clxvii.
—— —— H.M. Astronomer, lxxviii, clxvii.
—— early life of, clxvii.
—— Investigations on the positions of close circumpolar stars, cxxxiii, clix.
—— —— the division-errors of Reversible Transit Circle, 84 *et seq.*
—— Scientific papers not contained in the Cape Observatory Publications, List of, clxxviii.
—— Solar Parallax, measures and reduces Cape Spectrograms for Determination of, lxxviii.
—— Work at the Cape Observatory, clxviii.
Hough, S. S. and Sir G. Darwin, scientific paper not contained in the Cape Observatory Publications, clxxviii.
Hough, S. S. and Sir David Gill, scientific paper not contained in the Cape Observatory Publications, clxxviii.
Hough, S. S. and J. Halm, scientific papers not included in the Cape Observatory Publications, List of, clxxviii.
Huggins, Sir W., applies the spectroscope to stars and nebulæ, 4.
—— suggests method of photographing the solar corona without an eclipse, xli, xlix.
Hunter, S., observed Transit of Venus (1874), xxxiii.
Hutchinson, Sir W. H., unveils the Memorial to McClean, clv, 3.

Innes, R. T. A., appointed Director of the Johannesburg Observatory, lix, *n.*
—— joins the staff of the Cape Observatory, clii.
—— mounts a 9-inch Grubb telescope on equatorial stand lent by Gill, xli.
—— Revision of Cape Photographic Durchmusterung, lviii, clvi.
—— undertakes continuation of Mr Franklin Adam's work, clix.
—— uses the 7-inch Equatorial for Double and Variable Stars, xli.
—— work at the Cape Observatory, lviii–lx, cxxxix, clii, cliii, clv, clvi, clvii, clxv.
Instruments—
—— Altazimuth, The Three-foot:—
—— —— Fundamental Declinations determined by, xliv.
—— —— lent permanently to the Cape Observatory, xliii.
—— —— made for the Great Trigonometrical Survey of India, xliii.
—— Astrographic Telescope, The, 120.
—— —— Observatory, 122.
—— —— work accomplished with, xliii, cxxxii.
—— The Callendar Recorder, 30.
—— Equatorial, Grubb's 6-inch, xlii, cxlvi.
—— —— the 7-inch:—
—— —— defects of, xli.
—— —— erected 1849, xli.
—— —— Micrometer, A new, xli.
—— —— useful for observing Comets, Occultations and Double Stars, xli.
—— Heliometer, the 4-inch, xli, lx–lxvi, cxlvi.
—— —— the 7-inch, xlii, lxii–lxviii, cxlvii, cxlviii, clv, 126, 127.
—— —— —— —— work executed with, xlii.
—— Kapteyn's instrument for measuring the plates of the Photographic Durchmusterung, liii.
—— measuring, used in Astrophysical Observations, cxli.
—— Micrometer, the "impersonal," designed by Repsold, 49.
—— —— Gill's suggestions respecting, 50, 51
—— —— Papers on, by Struve and Cohn, 49.
—— —— used by Seeliger, 49.
—— Parallactic instrument for use in the Cape Photographic Durchmusterung, devised by Kapteyn, Gill and Repsold, li, lii.

Digitized by Google

Instruments—
—— the Photo-heliograph :—
—— —— of the De la Rue type, xli.
—— —— replaced by a coronagraph, xli.
—— Portable in the Observatory, xliv.
—— Refractor, the 6-inch :—
—— —— used by Finlay for observing Comets, xlii.
—— —— Zöllner photometer attached to, xlii.
—— Reversing prism eye-piece, difficulty in the use of, cxxviii.
—— Ross lens of 2½ inches aperture used to photograph the great Comet of 1882, xlviii.
—— Spectro-comparator, the Hartmann, lxxviii.
—— The Spectroscope, clv, clvii, 18 *et seqq.*
—— —— Chief object, to study star-motions in the line of sight by displacement of lines near H_γ, 18.
—— —— Callendar Recorder, 30.
—— —— As Constructed by the Cambridge Scientific Instrument Company, 23.
—— —— Details of, designed by H. Darwin, lxxviii, 23.
—— —— Focussing and clamping arrangements, 25.
—— —— Gill's specification and design for, 18–21.
—— —— Mechanical details generally, 27.
—— —— Newall's, F., method of focussing, clvii.
—— —— Object-glasses, 32.
—— —— Plate Holder, 26.
—— —— Prism-box, 18, 26.
—— —— Prisms, Brashear's replaced by Hilger's, 27, 33.
—— —— Requirements, 18 *et seq.*
—— —— Slit and Comparison Apparatus, 20,23.
—— —— Thermostat, The :—
—— —— —— Designed by H. Darwin, 28.
—— —— —— Details of, 29.
—— Transit Circle, The Airy :—
—— —— Central illumination of field adopted, xl.
—— —— Condition of, in 1879, xl.
—— —— Duplicate of the Greenwich Transit Circle, xl.
—— —— Erected, 1855, xl.
—— —— Fundamental observations, why not reliable for, xl.
—— —— Micrometer screws, the old gun-metal replaced by steel, xl, cxlvii.
—— —— Object-glass by Troughton and Simms replaced by a Cooke's triple, xl, 48.
—— —— Supplemented by a reversible Transit Circle, 1901, xl.
—— Transit Circle and its Observatory, The Reversible, 36–117.
—— —— Arrival at the Cape, clv.
—— —— Azimuth marks, Stability of the, 115.
—— —— As constructed, 43.
—— —— Base-plate, the Adjustable, 42.
—— —— Collimation, Determination of the, 78.
—— —— Collimators, 46.
—— —— Cone Apparatus, The, 56.
—— —— —— —— Regulating Motor of, 54.
—— —— Difficulty in obtaining sanction for its construction, 36.
—— —— Design of Instrument, Gill's ideas embodied in the, 36.
—— —— Difficulties as to the foundations, 38, 39.
—— —— Errors of the Circle Divisions, Determination of the, clvii, clix, 84.
—— —— —— —— Tables of, 108, 109, 110.
—— —— —— Micrometer screws, Determination of the, 59.
—— —— —— Pivots, Investigation of the, clix, 66.
—— —— Flexure of the Circles, 110.
—— —— Long-focus lenses and Meridian Marks, clx, 46.
—— —— Microscopes, The Circle, 58.
—— —— Observatory for, 38–42.
—— —— Object-glasses fixed at bottom of the pits, 47.
—— —— Pits for the underground azimuth marks of, lined with cast-iron cylinders, clvi, clvii, *n.* 41.
—— —— Reversal, weekly, 79.
—— —— Site reported on, by Prof. Corstorphine, 39.
—— —— Travelling wire eye-end, clvii, clix, 48.
—— —— —— Advantages of the, clix.
—— Victoria Telescope and its Observatory, The, 7, *et seq.*
—— —— Adjuncts to, for spectroscopic work, 31.
—— —— Mr T. M'Clean offers to present, cliii.
—— —— Clock-work and slow motion, 14.
—— —— Correspondence respecting, 1.
—— —— Deficiencies of the original stand, cliii, 10, 11.
—— —— Details of observatory, 9.
—— —— —— telescope, 10.
—— —— Hydraulic appliances, cliv, 12.
—— —— Illumination, 15.
—— —— Machinery for rotating dome, cliv, 13.
—— —— —— for winding clock, 13.
—— —— Object glass prisms, clviii, 34.

Instruments—
—— Victoria Telescope and its Observatory—
—— —— Remodelling of various parts at the Cape, cliv.
—— —— uses of, clx, clxi.
—— Zenith Telescope, The, xliv.
Iris observed for determination of Solar Parallax, xlii, lxxii, cxlviii, cli (see Parallax, Solar).
—— photographed in 1899 to determine Moon's Mass, cliv.

Jackson, J. A., clxiii.
Jacob, Capt. W. S., Telescope made for, xxxi.
Jacoby, H., takes part in the triangulation of the Victoria stars, lxxiii.
—— Visits the Observatory, cl, clii.
—— marries daughter of Mr G. Maclear, cl.
Jeffries, C. W., clxiii.
Jeffrey, Lord Advocate, xv, xvi.
Johnson, M. J., Astronomer at St Helena, xvii.
Johnston, H., cvi.
Joly, C. J., Inspects the Cape Observatory, clxi.
Jones, Mr, supplies instruments to the Observatory, vi, vii.
Jupiter, Mass of, Determination of, lxxxiv *et seq.*
—— Oppositions of, 1912–1925, xcviii.
Jupiter, Satellites of, Data still necessary for a definitive determination of the constants for a new theory of, xcvii–ci.
—— Determination of the Elements of the Orbits of, lxxxiv *et seq.*
—— Details of proposed photographic exposures for, xcii.
—— of the Inclinations and Nodes of, xcv *et seq.*
—— Gill's method of deriving their latitudes, lxxxv.
—— —— de Sitter's Discussion of the observations of, lxxxvii.
—— Mass of Sat. iv. still imperfectly known, c.
—— Observations of mutual distances and position angles by Gill, Finlay, and Cookson, xlii, cli.
—— Photographs of, xliii.

Kaiser, Dr, xxxvi.
Kapteyn, J. C., correspondence of, with Gill respecting the Cape Photographic Durchmusterung, xlix, cli, cliii.
—— appreciation of his work, lviii.
—— plan of work with respect to the Photographic Durchmusterung, xlix–liv.
—— —— completed, clv.
—— receives the Gold Medal of the Royal Astronomical Society, lviii.
—— visits the Cape Observatory, clxi.
Kapteyn-Pritchard, Areas in different Galactic latitudes, Plates taken for comparison of, xliii.
Kater, Capt., vi.
Key, Rev. H. C., xxxii.
King, Lieut. W. A. de C., cx.
Kirchhoff, G. R. and R. W. Bunsen, interpret the meaning of the spectrum lines, 4.
Knobel, E. B., acknowledgment of his kindness in reading proofs (Preface), 1.
Kolschutter, Dr E., cxliii.
Küstner, Professor, xxxix.

La Caille, N. L., chooses site for an observatory, v.
—— deduces the Solar Parallax, lxviii.
—— measures Arc of the Meridian, v, cii.
—— memorial of, vi.
—— objects of his expedition to the Cape, v, cxxv.
—— Maclear verifies and extends La Caille's Arc of the Meridian, xxii, cii.
Laplace, the speculations of, 3.
Laffan, Colonel, and geodetic survey, ciii, civ, cv, cxvii, clvi.
—— —— appreciation of his services, cxxiii, clviii.
Latitude, observations made by Gill and Finlay for investigating change of, xliv.
Lauderdale, Earl of, xv, xvi.
Laves, Dr K., lxxiii, lxxxi.
Lax, Rev. W., vi.
Leslie, Professor, xv.
Ley, Captain C. H., cx, cxi.
Le Verrier, U. J. J., xxiv.
Lindsay, Lord (afterwards Earl of Crawford), xxxii, xxxiii, xxxiv, xxxv, xxxvi, xxxviii, lx.
—— his support of Gill's candidature for the Cape, xxxix.
—— lends Gill 4-inch heliometer for Ascension expedition, xxxvii.
—— and D. Gill, scientific papers, List of, cxxvii.
Lindsay, Dr, xxx.
Livingstone, D., taught the use of the sextant by Maclear, xxiii, cxliii.
—— his observations reduced by Maclear, xxiii, cxliii.
Lockyer, Sir J. N., discovers helium lines in certain star spectra, 5.
—— finds certain stellar lines to be due to silicon, cxl.
Lœwy, M., Director of Paris Observatory, cxxxii.

Digitized by Google

Longitude operations, Minor, xxxiii, cxlii.
—— stations connecting Berlin with Malta, Alexandria, Suez, and Aden, xxxiv.
—— of the Cape Observatory, xxxv, cxlvii.
Löwinger, V. A.
—— appreciation of his services, cxxiii.
—— takes part in the Stellar Parallax Work, lxvii.
—— work at the Cape Observatory, clxvi.
Lunt, J., clv, clxiii.
—— discovers europeum in the spectra of certain stars, clxii.
—— —— silicon, cxl.
—— measures double stars, clv, clvi.
—— work at the Cape, clxv.
Luther, E., employed the Königsberg Heliometer in determining the mass of Jupiter, lxxxv.

M'Caw, G. Tyrrell, cvi.
—— appreciation of his services, cxxiii.
M'Clean, F., arrives at the Cape, xliii, cliii.
—— death of, cliii, clix.
—— discovers certain stellar lines due to helium, 5.
—— —— —— —— —— —— oxygen, xliii, cxxxix.
—— letter offering to present a telescope to the Cape Observatory, 1–2.
—— memorial to, 3.
—— presents the Victoria Telescope, xliii, clii, cliii.
—— work at the Cape, xliii.
Maclear, James, xix.
Maclear, G. W. H., civ, cli, clii, clxii.
—— appointed Second Assistant at the Cape Observatory, clxiv.
—— his work, clxiv.
Maclear, Sir T., appointed H.M. Astronomer at the Cape, xx
—— character of, xxiii.
—— consolidates the property of the Observatory, xxii.
—— death of, xxiv.
—— early life of, xix.
—— erects the 7-inch equatorial, xli.
—— honours conferred on, xxii, xxiv.
—— La Caille's Arc of Meridian, Verification of, xxii.
—— Livingstone, friendship with, xxiii, cxliii.
—— Meridian Observations, xxii, xxiii.
—— Observations of α Centauri, xix.
—— originated the Cape Meteorological Commission, xxiii.
—— retired from the Observatory, xxiii.
—— scientific papers not contained in the Cape Observatory Publications, List of, clxxv.
—— Survey of South Africa, engaged on the Geodetic, xxiii, cii.
—— treatment of, official, xxii, xxiii.
—— weights and measures, Member of Commission on Standards, xxiii.
—— work at the Cape, xxii, xxiii.
Maclear, Miss N., clxiii.
Magnitude Equation, The, clxi.
—— Gill's discovery of, xxxviii.
Main, Rev. R., xix, xxvii.
—— Death of, xxxix.
Malta, Longitude of, xxxv.
Mann, Major-General C., xxviii.
Mann, W., appointed Assistant at the Cape, xxviii.
—— —— Acting Astronomer, xxix.
—— Argelander's Zones, planned and began extension of, in Southern hemisphere, xxix.
—— early life of, xxviii.
—— honour conferred on, xxx.
—— illness, resignation and death of, xxx.
—— La Caille's Arc of Meridian, Re-measurement of, xxix.
—— observed comets, xxix.
—— Transit Circle, erected the new (1852), xxix.
Marth, A., visits the Cape Observatory, cxlvi.
Mauritius, longitude of, xxxiii, xxxvi.
Maw, Mr, his suggestion to make the male and female screws of microscopes of equal length, 59.
Maxwell, Clerk, xxx, xxxi, xxxix.
Meadows, Lieut., appointed Assistant to Fallows, xiv.
—— —— in charge of Cape Observatory, xv.
Meldrum, Dr C., Director of the Royal Alfred Observatory at Pamplemousses, assists in observations of the Transit of Venus (1874), xxxv.
—— his hospitality to Gill, xxxv.
Melville, Lord, vi.
Melville, Mr, his survey of the Cape Observatory grounds, xi (see also accompanying diagram).
Meridian Observations, Historical Accounts of, xlv *et seq.*, cxxxi.
Merz (Optician), xxii, xli.
Meteorological Observations made daily at the Cape Observatory, cxliii.
Middleton, C. de C., cx.
Miller, T. (Optical fitter at the Cape Observatory), cliii, clvi, clxiii.
—— appreciation of his services, clxvii.
Milner, Lord, promotes Geodetic Survey, cix.
Milner, Dean, vi.
Mitchell, Sir Charles, cxlvi.
—— question of Geodetic Survey of Natal reopened with him and agreed to, ciii.
Mission to Berlin, Gill's, to arrange delimitation of boundary Survey between British Bechuanaland and German S.W. Africa, clii.
—— —— thanks for, to Gill from Colonial Office.
Moon, Mass of the, determination of the, lxxx *et seq.*
—— —— determined by Hinks from observations of Eros, lxxxiii.
—— —— value, the most probable, lxxxiv.
—— Occultations by the, Maclear's unpublished observations reduced and published by Gill, cxxx.
—— —— 1946 occultations observed at the Cape, reduced and published, cxxx.
—— parallax of the, determined by Breen, cxxv.
—— —— —— Henderson, xvi, cxxv.
—— —— —— Newcomb, cxxix.
—— —— —— Stone, xxiv, cxxv.
—— —— how best determined, cxxv, cxxviii *n.*
—— Mösting A, Schlüter's observations of, cxxv.
—— —— and the Moon-culminating stars of the Nautical Almanac, Meridian observations of the declinations of, made simultaneously at Greenwich and the Cape, cxxvi.
—— —— results reduced by Crommelin, cxxvi, cxxvii, cxxix *n.*
Morris, Captain (afterwards Sir William), ciii, civ, cix (see Survey Geodetic) cli, clii, clviii, clxii.
—— appreciation of his services, cxxiii.
Morgenrood, S. B., cx.
Mouchez, Admiral, communicates to the Paris Academy Gill's proposal to photograph the heavens, xlix.
—— Gill suggests to, to hold a Congress at Paris, cxxxi.
—— —— suggests to, to make a catalogue of stars from photo plates, cxxxi.
Mudge, Major-General, vi.
Mullis, H. F., clxiii.

Nasmyth telescope, The, lii, 122 *n.*
Newall, R. S., offers to lend Gill his large telescope, 6.
Newcomb, S., discusses completely all the contact observations in the Transit of Venus of 1761, 1769, 1874 and 1882, lxx.
—— his adopted value of the Mass of Jupiter, xcv.
—— New Lunar Theory, cxxx.
—— visits the Cape Observatory, cxlvi, clxxii.
Nova Aurigæ and η Argûs, changes of brightness probably due to very similar causes, cxli

Object-glass, The Cooke-Taylor three lens, advantages and disadvantages of, xl, 48.
Observatory of King's College, Aberdeen, Gill's early work there, xxxi.
—— Private, Gill's, at Aberdeen, xxxii.
Observatory, The Calton Hill, xxxi.
—— —— Gill's equatorial reflector at, xxxii.
Observatory at the Cape:—
H.M. Astronomers at:—
Fallows, Rev. F. (1820–1831), viii.
Finlay, W. H. (Assist.), clxiii.
Gill, D. (1879–1907), xxx, cxlv–clxviii.
Henderson, T. (1832–1833), xv.
Hough, S. S. (1907–), clxvii.
Maclear, T. (1833–1870), xix.
Mann, W. (Assist.), xxviii.
Smyth, C. Piazzi (Assist.), xxviii.
Stone, E. J. (1870–1879), xxiv.
—— Cannon's Contract for the first building, xi.
—— description of, 1–127.
—— history of, v–cxc.
—— instructions for the Astronomers at the, ix, xx, xxvi.
—— instruments at, xiii, xxii, xxix, xl *et seq.*, 1–127.
—— list of members of the staff in 1879, clxii.
—— —— 1907, clxiii.
—— officials of all denominations, 1820–1907, clxix.
Publications, Lists of:—
Annals, clxxiii.
Catalogues of Stars, clxxiv.
Heliometer Observations, clxxiii.
Independent Day Numbers, clxxiv.
Longitudes, clxxiv.
Meridian Observations, clxxiii.
Reports to the Secretary of the Admiralty, clxxiv.
Survey of South Africa, Reports on the, clxxiv

Digitized by Google

Observatory at the Cape:—
—— Transit Circle, Longitude of the Airy, xxxv.
—— Work at, arranged chronologically, cxlv–clxviii.
Observatory at Dun Echt, Equipment of the, xxxiii.
Observatory, Royal, at Edinburgh—Instruments presented by Lord Crawford, xxxii.
Observatory officials, Qualifications needed in, clxvi, clxvii.
Origin of Co-ordinates of the Geodetic Survey, cxx.
Oudemans, Dr, xxxvi.
Oxygen discovered in the spectra of certain stars, xliii, cxxxix.

Parallax, *see* Moon, Stars, Sun.
Preston, Cadet, visits Cape and assists Preston in pendulum and magnetic observations, cl.
Peacock, Dean, viii.
Pead, J. A., clxiii.
Pearse, T., xx.
Pennell, W., xi.
Periodic Orbits investigated by Hough, clxviii.
Pensacola, U. S. S., with American eclipse party visits the Cape, cl.
Perry, Rev. S. J., cxlvi.
—— visits the Cape Observatory, clxxii.
Personality in Right Ascension depending on magnitude, the amount of, determined by adapting wire gauze screens to the Transit Circle, xl., clxi.
—— by comparison with Heliometer Observations, clxi.
—— depending on the direction of motion across the field of the Transit Circle eliminated by the use of a reversing prism, xl.
Peter, Dr, observes *Iris* and *Victoria* for Solar Parallax at Leipzig, lxxii.
—— —— *Sappho* for Solar Parallax at Leipzig, lxxiv.
Pett, R. T., Assistant at the Cape Observatory, civ, cxlii, cxliii, clxii, clxiii.
—— his work, clxv.
Phœbe, satellite of Saturn, photographed, clx.
Pillans, C. R., civ, clxii.
Pilling, A., clxiii.
—— appointed Secretary at the Cape Observatory, clxvi.
Pond, J., vi, vii.
—— appointed temporarily Superintendent of the Nautical Almanac, xvi.
Port Elizabeth, Cape Longitude, civ.
Power, J., on the staff of the Cape Observatory, clii, clxiii.
—— his work, clvi, clxv.
—— prepares Appendices I, II, and III for this work (Preface).
Preston, E. D., visits the Cape Observatory, clxxii.
—— makes pendulum and magnetic observations at the Cape, cl.
Prism—Objective, clv, clviii, 34.
Pritchard, Rev. C., xxvii, cxxxii.
Puiseux, P., measures a selection of the Paris Lunar photographs to determine libration of the Moon, cxxvi.
Pullen, Commander, cxlii.
—— determines longitudes on west coast of Africa, cxlix.
—— his death, cxlix.

Rambaut, A. A., inspects the Cape Observatory, clxi.
Ramsay, Sir W., Discovery of helium, 5.
—— presents to the Cape Observatory tubes of argon and helium for the identification of certain stellar lines, cxl.
—— *see* Rayleigh, Lord.
Ramsden, J. (instrument maker), xi.
Rayleigh, Lord and Sir W. Ramsay, discover argon, 5.
Rennet, Dr D., xxxi.
Rennie, J., viii, ix.
Repsold, constructs various instruments for Observatory, xli, xlii, li, lxii, cxxiii, cxxxii, cxxxix, cxlvii, 49, 51, 127.
Rhodes, Cecil, cv.
Richards, Admiral Sir F., Inspects the Cape Observatory, cxlv.
—— Gill accompanies him to Natal, ciii, cxlvi.
—— his constant interest in the Cape Observatory, cxlv.
Rigaud, S. P., vi, xvi.
Ristenpart, Dr F. W., Revised lists in Cape Annals, lix.
Ritchie, J., & Son, Messrs., xxxi.
Robertson, Rev. Dr, vi.
Robertson, J., xiv, xv.
Robinson, W. B., Appointed computer at the Cape Observatory, civ, cx.
—— his work in the Survey, cx, clxvi.
—— appreciation of his services, cxxiii.
Ronald, Capt. W., appointed assistant to Fallows, xii.
Rosse, Earl of, Inspects the Cape Observatory, clxi.
Rubin, Tryggve, in charge of Survey of N.E. Rhodesia, cv, cvi, cvii, cviii, cvix, clviii.
—— appreciation of his services, cxxiii.
Russel, H. N., Stellar parallax observations, xcvii, *n.*

Sampson, R. A., constructs new tables of Jupiter's Satellites, xcvii.
Sappho, minor planet, observed for determination of Solar Parallax, xlii, xlviii, lxxiv, lxxv, lxxvi, cxlix, cli.
Saunder, S. A., Co-ordinates of Mösting A, etc., cxxv, *n.*
Sawerthal, H., appointed computer, clxvi.
—— assists in taking the Durchmusterung photographs, liii, clxvi.
—— discovers Comet, 1888 I., cxlviii.
Schomberg, Commodore, xiv.
Schur, W., determined the mass of Jupiter from Heliometer Observations, lxxxv.
—— observes *Victoria* for Solar Parallax, lxxii.
—— —— Triangulation of Victoria comparison Stars, lxxiii.
—— —— *Sappho* for Solar Parallax, lxxiv.
Scragg, F. H., clxiii.
Short, J., clxiii.
Shoyer, Mr, photographs the great Comet of 1882, xlviii.
Sidgreaves, Rev. W., visits the Cape Observatory, cxlvi, clxxii.
Silicon discovered in the spectra of certain stars, cxl.
Simms, A., appointed Computer at the Cape Observatory, clxvi.
—— takes part in the Geodetic Survey, cv, cxi, cxii, cxiv, clxvi.
—— appreciation of his services, cxxiii.
Simpson, Mr, photographs of the great Comet of 1882, xlviii.
Simpson, J. A., clxiii.
Sinfield, J. C. (Assistant to Stone), Death of, xxvi.
Sitter, W. de., applies to Gill for photographs of Jupiter's Satellites, xliii.
—— Account of his first meeting with Sir David Gill, lxxxvii.
—— Corrects Souillart's values of the Inclinations and Nodes of Jupiter's Satellites, xcv.
—— Determines the visual magnitudes of stars in different Galactic latitudes, xlii, cliv.
—— Discusses Gill's and Finlay's heliometer observations of Jupiter's Satellites, lxxxvii.
—— Inspects the Cape Observatory, clxi.
—— Joins Cape Observatory Staff, lxiii, cliii.
—— Offers to measure and discuss observations of the libration, inclination and nodes of Jupiter's satellites that may be made in 1918–1919, c.
—— Assistant to Kapteyn at Groningen, lxxxvii, *n.*
—— Professor at Leiden, clxi, *n.*
—— Publishes investigations on the mass of Jupiter and the masses and elements of his satellites and on his three inner Satellites, xciv.
—— Suggests a new series of heliometric or photographic Observations to determine the orbits of Jupiter's satellites and Jupiter's Mass taking the mean epoch 1903–7, xcii.
—— —— mean epoch 1920, xcix.
—— Takes part in Stellar Parallax work, lxiii, lxvii.
Skerrow, J., Appointed Clerk of Works, xii.
Skully, Rev., Appointed Labourer, xi.
—— Appointed Second Assistant to Fallows, x, xi.
—— Dismissed, xii.
Small, Mr, xv.
Smyth, C. P., appointed assistant to Maclear, xxviii.
—— Astronomer Royal for Scotland, xxviii.
—— character of, xxviii.
—— death of, xxviii.
—— early life of, xxviii.
—— instituted time-gun at Edinburgh, xxxi.
—— observed Comet of 1843, xxviii.
—— —— Halley's, xxviii.
—— assisted in verification and extension of La Caille's Arc of Meridian, xxviii.
—— Zwartland Base, assisted in measuring the, xxviii.
Smyth, Admiral W. H., xix.
Société Génévoise, 54.
Soeters, Dr, xxxvi.
Staff—See Appendix I, p. clxix.
—— increase of, proposed and sanctioned, cliii.
Speckman, Mr, lvi.
Spectroscope—see instruments.
Standard Bar—10 feet Iron standard, cxiii, cxlviii.
Star Catalogues:—
—— Cape Catalogue of 2892 stars for the Equinox 1840, (Maclear's observations 1834–1840) revised and published by Stone, 1878, xxiii, xxvi, xlv.
—— Cape Catalogue of 4810 stars for the Equinox 1850 (Maclear's observations 1848–1853) revised and published by Gill, 1884, xxii, xlv, cxlvii.
—— Cape Catalogue of 1159 stars for the Equinox 1860 (Maclear's observations 1855–1860), reduced by Maclear and Stone and published by Stone, 1873, xxiii, xxvi, xlv.

Digitized by Google

Star Catalogues :—
—— Cape General Catalogue of 1905 stars for the Equinox 1865 (from observations 1860–1870), reduced and published by Gill, 1900, xlv.
—— Cape Catalogue of 12,441 stars for the Equinox 1880 (from observations 1870–1879), reduced and published by Stone 1881, xxvii, xlv.
—— Cape Catalogue of 1713 stars for the Equinox 1885 (from observations 1879–1885), published by Gill 1894, xlv, cliii.
—— Cape Catalogue of 104 Southern Circumpolar stars (from observations 1881–1888), published by Gill 1882, xlvi.
—— Cape Ten Year Catalogue of 3007 stars for 1890 (from meridian observations 1885–1905), published by Gill 1906, xlvi, cliv.
—— Cape Catalogue of Astrographic standard stars for the Equinox 1890 (8560 stars), published by Gill 1906, xlvi, clxii.
—— Cape General Catalogue for 1900, Parts I.–IV., xlvii, clxii.
—— Cape Catalogue of 1680 stars for 1900 from Observations of 1905–1906, published 1907, xlvii.
—— Cape Catalogue, The next to be issued, xlviii.
—— Cape Catalogues of 1840 and 1850, Possible errors in, investigated by Power, clvi.
—— Cape Meridian Observations by Henderson 1832–33, compared with those of La Caille, Bradley, Piazzi, Rumker, Johnson and Pond, xlv.
—— Cape Photographic Durchmusterung, xlviii–lx, cxlvii, cli, cliii, clv.
—— —— Errors of Magnitudes, Probable, lvii.
—— —— Limits of accuracy in Measurement of the plates, li.
—— —— Method of work adopted, lvi.
—— —— Plates first exposed, liii.
—— —— —— Publication of, when completed, lviii.
—— —— —— Published, lviii.
—— —— —— Revision of, by Innes, lviii, clvi.
—— Fallow's, of 425 stars, reduced and published by Airy, 1851, xv, xlv.
—— Gould's Zone Catalogue, lvi.
—— Henderson's Meridian Observations 1832–1833, reduced and published by him, Decl. 1837, R.A. 1846, xvii, xlv.
—— Kapteyn's Catalogue of 454,875 stars in the Cape Photographic Durchmusterung, lvii.
—— La Caille's Catalogue of 10,035 stars (*Coelum Australe Stelliferum*, 1763), v.
—— Schönfeld's Durchmusterung, lvi.
—— —— Radcliffe Catalogue of 6424 stars, xxvii.
—— Stone's Catalogue of proper motions of 450 stars, xxv.
—— Catalogues for which errata are given in the revision of the C.P.D., lx.
Stars, Circumpolar, Investigations for the positions of close, cxxxiii.
—— —— Object aimed at, cxxxiii.
—— —— Programme of the work, cxxxiii.
—— —— Results reduced and discussed by Hough, cxxxiii.
—— —— Systematic errors to be discussed by Hough, cxxxvii.
—— Double, cxxxviii, cxxxix.
—— —— α Centauri measured by Maclear, cxxxviii.
—— —— —— by Innes, clv, clvii.
—— —— Instruments used, cxxxix.
—— —— Very few measured at the Observatory till Mr Innes joined the staff, cxxxix.
—— Parallaxes of, xli, xlii, lx–lxviii, cxlviii.
—— —— Completion of publication of results for, clv.
—— —— of Bright Stars :—
—— —— α Argus, lxii, lxiii.
—— —— α Canis Majoris, lxii, lxiii.
—— —— α Centauri, xvii, lxi, lxiii.
—— —— β Centauri, lxii, lxiii.
—— —— α Crucis, lxiii.
—— —— β Crucis, lxii, lxiii.
—— —— 61 Cygni, xviii.
—— —— α Eridani, lxiii.
—— —— α Gruis, lxiii.
—— —— α Lyræ, xviii.
—— —— β Orionis, lxii, lxiii.
—— —— α Piscis Australis, lxiii.
—— —— α Scorpii, lxiii.
—— —— α Virginis, lxiii.
—— —— of Stars having large Proper Motion (in order of amount of Proper Motion), lxiv.
—— —— Z.C.v.^{h}, 243, lxiv.
—— —— Lacaille 9352, lxiv.
—— —— ϵ Indi, lxiv.
—— —— o_2 Eridani, lxiv.
—— —— e Eridani, lxiv.
—— —— β Hydræ, lxiv.
—— —— ζ Toucani, lxiv.
Stars, Parallaxes of :—
—— —— xiv.^{h} 212, lxiv.
—— —— τ Ceti, lxiv.
—— —— Lacaille 2957, lxiv.
—— —— work at the Cape shared by Gill and Elkin, lx.
Steinheil (optician), xxxii.
Stevens, Miss M., clxiii.
Stoehr, Dr F. O., cv., cvi., cvii., clviii.
Stokes, Sir G., l.
Stone, General, xxxvi.
Stone, E. J., appointed H.M. Astronomer at the Cape, xxiv., xxv.
—— —— Chief Assistant at Greenwich, xxiv.
—— —— Radcliffe Observer, xxvii.
—— Bessel's Mean Refractions shown to be too great, xxv.
—— Cape Catalogues, xxvi., xxvii, xlv.
—— Cape Observations of 1871, 1872, 1873, xxvi.
—— character of, xxv., xxvii.
—— early life of, xxiv.
—— eclipse expedition to Klipfontein, 1874, xxvii.
—— Fraunhofer lines reversed, Observation of, xxvii.
—— Fundamental Right Ascensions of α Pegasi, α Geminorum, α Virginis, α Aquilæ, xxv.
—— Honours conferred on, xxvii.
—— Lunar Parallax, The constant of, xxiv.
—— Magnetic Observations in Namaqualand, xxvii., cxliii.
—— Object in going to the Cape, xxiv., xxxix.
—— Proper motions of stars, Catalogue of, xxv.
—— Remounts the 7-inch equatorial, xli.
—— Scientific papers not contained in the Cape Observatory Publications, List of, clxxvi.
—— Solar Parallax determines (8″·91), xxiv. ; (8″·89), xxv.
—— Star-constant tables for computing apparent from mean places of stars and *vice versa*, xxvii.
—— Venus, Rediscussion of the observations of the Transit of, 1769, xxiv.
—— —— 1874, xxv.
Straith, Miss M. E., clxiii.
Strange, Col., xliii.
Stoehr, Dr F. O., cv., clviii.
Stroud, E., cv., cvii., clviii.
Struve, F. G. W., Parallax of α Lyræ, xviii.
Struve, H., xxxix.
—— The first to observe the co-ordinates of Satellites relative to one another, lxxxv.
Struve, Otto, Supports Gill's proposed Durchmusterung, li
Suez, Longitude of, xxxiv.
Sun, Parallax of the ; Astronomers who took part in observing the Minor Planets for the determination of the, lxxi, *et seq.*
—— —— Determination from observations of *Juno*, xxxvi.
—— —— —— *Mars*, xxxviii.
—— —— —— *Victoria*, *Sappho* and *Iris*, lxxvi.
—— —— Discussion of, by Hinks from observations of *Eros*, lxxx.
—— —— Concluded most probable value of, lxxx.
Survey of South Africa, The Geodetic, ci–cxxiv.
—— Alston's triangulation, cxii.
—— Cape Colony and Natal, ciii.
—— Boundary between British Bechuanaland and German S.W. Africa, civ.
—— Bosman's and Laffan's triangulation, cv.
—— Southern Rhodesia, cv.
—— Northern Rhodesia, cv.
—— Transvaal and Orange River Colony, cix.
—— Arc of Meridian measured by La Caille, v, ci.
—— —— and verified by Maclear, xxii, cii.
—— —— along 30° E. Longitude proposed, civ.
—— Astronomical observations, cxx.
—— —— and Geodetic compared, cxxi, cxxii.
—— Bahn, Dr, Article on the Geodetic Survey of South Africa, cxxiv.
—— —— Translation of, clxxix.
—— —— Values of the figure of the earth compared with Clarke's, cxxiv.
—— Bailey, Capt. L. C., makes triangulations of the southern coast of Cape Colony and British Kaffraria, cii.
—— —— his survey re-reduced by Gill, civ.
—— Base lines, Chains and triangulations in the, ciii, cx, cxi, cxiii–cxvii, cxix.
—— Beaconing parties, cx.
—— Benoit, M., cxiii,
—— Bosman's triangulation, civ, cxii.
—— Chapman, P., assists, cv, clviii.
—— Cochrane, A., assists, cxi.
—— Codrington, R., Administrator, cvii, cviii.
—— Colley, Sir G., Advocates a survey of Natal, ciii.

Digitized by Google

Survey of South Africa, Commencement of, cxlvii.
—— Comparateur for determining lengths and temperature-co-efficient of Base measuring bars designed by Gill, cxlix.
—— Darwin, Sir G., procures funds to carry on the Geodetic Survey of South Africa, cxii.
—— Dehalu, M., cxxiii.
—— Dunman, Lieut. T. N., takes part in, cx.
—— Errors of observed angles, Probable, cxviii.
—— Frere, Sir Bartle, Approves of Gill's recommendations for an accurate triangulation of South Africa to be undertaken, cii.
—— Geodetic Co-ordinates, origin of, cxx.
—— Gill, Sir D., asked to furnish specifications for the instruments needed, ciii.
—— —— Suggests that the Cape Triangulation should be extended to the mouth of the Nile, civ.
—— —— Takes the chief part in planning, cii–cxxiii.
—— Goode, R., acting Administrator, cvii.
—— Gordon, Capt. H. W., assists, cx, cxiii, cxxiii.
—— Grey, Earl, sanctions commencement in Rhodesia, cv.
—— Helmert, Dr, cxxiv, cxxix.
—— Hough, S. S., supervises reduction of Gordon's and Rubin's observations, cxxiii.
—— Jäderin Apparatus, first use of, in South Africa, cxiv.
—— King, Lieut. W. A de C., assists, cx.
—— Laffan, Col., takes part in, ciii, cxvii, cxxiii, clvi, clviii.
—— Ley, Capt. C. H., assists, cx, cxi.
—— Lowinger, V. A., assists, cxi, cxxiii.
—— M'Caw, G. T., assists, cvi, cxxiii.
—— Measuring Bars used in the, cxiii, cxlviii.
—— Meridian Arcs, cxviii.
—— Milner, Lord, invites Gill to arrange preliminaries, cix.
—— Mitchell, Sir C., favours Gill's proposal for a Geodetic Survey of South Africa, ciii.
—— Morris, Sir W., his prominent part in, ciii, cix *et seq.*, cxxiii, cli, clii, clviii, clxii.
—— Pillans, Mr, assists, civ.
—— Rhodes, C., approves of the Survey, cv.
—— Robinson, Mr, assists, cx, cxxiii, clxvi.
—— Rubin, Tryggve, his share in, cv *et seq.*, cxxiii.
—— Simms', A., takes part in, cv, cxi, cxii, civ, cxxiii.
—— Stoehr, D., assists in, cv, cvi, cvii, clviii.
—— Wernher and Beit subscribe to, cxii.
—— Wettstein, Lieut., German Commissioner, cv, cxvii.
—— Whittingdale, Mr, assists, cxxiii.
Survey of South Africa, The Geodetic, Addendum, cxxiii.

Telescopes of long focus should be used for photographing Jupiter's Satellites, xcvii.
Temple, Mr, viii.
Thomson, Prof. D. of Aberdeen, xxxi, xxxii.
Thury, Prof., the Plantamour Equatorial at the University of Geneva, 54.
Tietjen, Dr, lxxii, lxxiii.
—— undertakes to make 8 figure log-computations of ephemeris of *Victoria*, lxxxi.
—— completes this ephemeris, cli.
Tiger Hill abandoned as the suggested site of the observatory, x.
Time, two hours E. of Greenwich adopted in South Africa, cxliv.
Time Signals, methods adopted to make, cxliii, cxliv.
Tisserand, Director of Paris Observatory, cxxxii.
Todd, D. P., visits the Cape Observatory, clxxii.
Transit Circle, see *Instruments*.
Troughton, supplies instruments to the Observatory, vi, xvi.
Troughton & Simms, make various instruments for observatory and survey, xxxiii, xxxviii, xl, xli, xliii, xliv, cxiii, cxlvii, cxlix, 38.
Tulbagh (Dutch Governor at the Cape), v.
Twamley, Miss, clxiii.

Van Lingen, Miss, clxiii.
Velocities in the line of sight, observations to determine stellar, cxli.
Venner, I. J., clxii.
Venus, Transit of, in 1882, South African observers of, cxlvi.
Victoria (minor planet) observed for determination of Solar Parallax, xlii, lxxii *et seq.*, cxlix, cli.
Vogel, Dr, lxxvii.
Vries, Mr de, lvi.

Walker, General, xliii.
Wallace, Professor, xv.
War, active service in, of members of Observatory Staff, cliv.
Watherstone, Captain, cxliii.
Watson, J. C., assists in the measurement of the base line for the Survey of Egypt, xxxvii.
Wettstein, Lieutenant, cv, cxvii.
Wharton, Sir W., runs Lord Lindsay's chronometers between Mauritius and Rodrieguez for Longitude, xxxv.
—— President Geographical Section, British Association in South Africa, clxi.
—— his important services to Astronomy as Hydrographer, xxi *n*, clxi.
—— death of, clxi.
Whittingdale, W., clxiii.
—— reduces the observations of Gordon's chain of triangles and geodetic survey of N.E. Rhodesia, cxxiii.
Wilkin, J. A., clxiii.
Wind-Tower, The, xlii.
Winnecke, Professor, xxxix.
Wollaston, Dr, vi.
Wood, J. C., clxiii.
Woodgate, R., clxiii, clxvi.
Woodhouse, R., vi.
Woods, C. Ray, Appointed Photographer and Computer at the Cape Observatory, clxvi.
—— Discovers an interesting Variable Star in Vela, clii.
—— Takes stellar photographs at the Observatory, li.

Young, Dr T., vi, vii, viii, xvi.

Zenith Telescope Observations for the Constant of Aberration, xliv, cl, cliii.

Digitized by Google

Digitized by Google

Digitized by Google

Digitized by Google

UNIVERSITY OF MINNESOTA
sci
Folio 522.19 C17
Gill, Davis, Sir, 1843-1914.
A history and description of the Royal o
3 1951 000 515 956 K

WILSON
ANNEX
[redacted]

Digitized by Google